Integrated Energy Optimization with Smart Home Energy Management Systems

B. Asare-Bediako, *Student Member, IEEE*; P. F. Ribeiro, *Fellow*, IEEE and W. L. Kling, *Member, IEEE*

***Abstract*— Optimization of energy use is a vital concept in providing solutions to many of the energy challenges in our world today. Large chemical, mechanical, pneumatic, hydraulic, and electrical systems require energy efficiency as one of the important aspects of operating systems. At the micro-scale, the built environment experiences progressive changes in energy consumption. There is steady increase in the annual energy consumption of households as a result of population growth, increase of economic activity and increased use of domestic appliances. The drive to reduce this growing trend has stimulated many mechanisms such as the use of energy labels on domestic appliances. Home appliance manufacturers research into developing energy-efficient products with the end-goal of making consumer devices more energy efficient. One important step towards energy efficiency and savings in the built environment is the introduction of Smart Home Energy Management Systems. (SHEMS). This paper analyses how the implementation of such solutions could contribute to energy savings and enhance efficiency for residential customers. The paper presents a general overview of energy efficiency measures focusing on residential loads. It further highlights, via modelling and simulation the potentials of Smart Home Energy Management Solutions for future domestic applications.**

***Index Terms*—energy efficiency, home energy management, renewable energy sources, residential customers, peak shaving**

I. Introduction

ENERGY is a life sustaining commodity. As part of the overall energy needs electrical energy has become a basic necessity for society and a vital entity for socio-economic development in our present world. In the Netherlands, access to electricity is the right of every citizen but has to be paid for according to market rules. If such energy was unlimited, and consumers only paid fixed monthly or yearly rates irrespective of their consumption that would be a game changer. For the energy suppliers and grid operators, supplying energy could only be limited by systems constraints and administrative procedures.

However, many primary energy sources for electricity are currently limited and relatively expensive. The prices of coal, oil and natural gas rise yearly. Solar and wind are unlimited primary sources, yet technologies to fully harvest their energy contents are still underdevelopment.

Alternatively, global electricity consumptions keep rising yearly [1], primarily due to increase in global population, and rise in economic activities (particularly in China and India). Furthermore, there is also steady increase in the annual domestic energy consumption due to changing needs of residential customers with respect to comfort, convenience and flexibility.

Residential electricity consumptions take a good portion of the total national or regional electric power consumption. To meet the growing demand of energy in this sector, pragmatic solutions from primary energy conversion to finished products are required. Home appliance manufacturers see improvements in energy consumption efficiency of appliances as a necessary step to curb the rising energy demands. Architects and building services engineers also research in diverse ways to make residential and commercial buildings more energy efficient.

The zero-energy buildings (ZEB) concept is recently becoming popular with municipalities, commercial and residential stakeholders in the Netherlands as a way to enhance energy security and efficiency. Though the definition of ZEB still remains unclear, it is generally defined as generating enough (renewable) energy on site to equal or exceed its annual energy use [3]. Whether electricity is generated locally or taken from the grid, it is important that households use energy efficiently.

Considerable efforts are being made in developing energy-efficient appliances and systems, such as frictionless mechanical systems, floor heating as alternatives to radiators for the built environment, and the use of light-emitting-diode (LED) lamps.

II. Definitions

Energy efficiency (EE) means different things to different stakeholders. Some definitions are given below:

- Reduction in the energy used for a given service or level of activity [5].
- Using less energy to provide the same service, performance, comfort, and convenience [6].

Reduction of energy consumption can be achieved as a result of technological changes or better (re-)organization and efficient management of existing infrastructure [5], [6]. Triple glazing, cavity wall insulation, loft insulation, and heating

This work was supported by the Dutch IOP Project EMVT06434 sponsored by the Ministry of Economic Affairs, Agriculture and Innovation of the Netherlands.

The authors are with the Faculty of Electrical Engineering, Electrical Energy Systems Group in Eindhoven University of Technology, 5600MB Eindhoven, the Netherlands (e-mails: b.asare.bediako@tue.nl; p.f.ribeiro@tue.nl; w.l.kling@tue.nl).

Authorized licensed use limited to: VNR Vignana Jyothi Inst of Eng & Tech. Downloaded on March 24,2026 at 10:32:58 UTC from IEEE Xplore. Restrictions apply.

978-1-4673-2597-4/12/$31.00 ©2012 IEEE

controls are some common energy efficient measures in the residential environment.

However, stimulating the culture of energy efficiency by end-users can be challenging. Currently, energy labels are used to inform customers of appliances' energy efficiency indices. Furthermore, market-based instruments might be more effective and efficient in stimulating EE than regulatory instruments. Again, homeowners, higher socio-economic groups, and pensioners are more likely to adapt energy saving measures [7].

III. Energy Consumption in the Netherlands

The energy scenarios for the Netherlands for 2009 and 2010 are fully analyzed in [2]. This section reviews the report and draws the need for energy optimization for the residential sector. The total energy consumption (in the form of electricity, gas, and motor fuel for transport) for the Netherlands in 2010 was 2865PJ. With exception of motor fuel transport, The Netherlands have three main energy sources: natural gas, electricity and heat.

A. Natural Gas Consumption

The residential sector is responsible for 20% of the total annual gas consumptions. In an average Dutch home, about 79% of the gas is used for space heating, 20% for domestic hot water and about 1% for cooking. Although there is a decreasing trend in the yearly natural gas consumption for households due to the introduction of high efficiency heat boilers and improvements in home insulation, Dutch homes still have the highest proportion of gas-heated homes in Europe [2].

B. Electricity Consumption

The residential sector consumed 24% of the total annual electricity for the year 2010 as shown in Fig 1. Fig 2 shows that cold appliances, laundry appliances, and lighting are the top electricity consuming devices in the residential sector on a yearly basis. Contrary to natural gas consumption, the average electricity consumption has steadily increased mainly due to increasing use of household appliances such as freezers, clothes driers and dishwashers. Though there is a decrease in average annual household electricity consumption from 2008 to 2010 (see Fig. 3), this is because the number of people in an average household is decreasing. However, the number of households is increasing and hence the total consumption by all households is increasing by 2.5% per year [2].

C. Heat Consumption

About 96% of households have direct connections to the natural gas network and about 4% are connected to heat supply networks. This heat which is mainly from large generation plants is consumed by green houses and large commercial buildings. There are very few residential customers who are connected to the district heating systems.

The Netherlands is third in the list of European countries whose residents pay much for gas and electricity [4]. Therefore, energy efficiency and saving measures are real concerns to the residential customers. Roof-mounted photovoltaic panels, integration of solar thermal collectors and the use of heat pumps are increasing with new residential buildings. With such systems, it is essential that the energy flows are well managed. A new paradigm shift is the introduction of so-called smart home energy management systems (SHEMS). SHEMS have the proposition that they help residential customers reduce their energy consumptions by offering automated control solutions. Home energy management solutions range from basic systems with overview information about energy usage data in various graphical forms, to automated ones, where appliances are controlled either locally or by third parties for demand response. Do and can SHEMS further enhance energy efficiency and saving for residential customers?

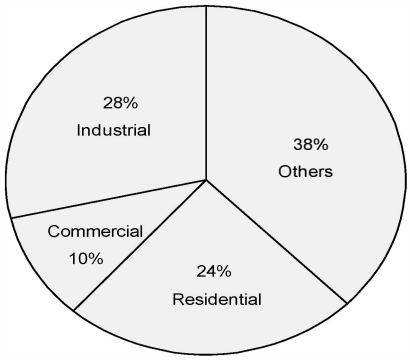

Fig. 1 Electricity consumption per sector in 2010 (Agentschap NL, 2011)

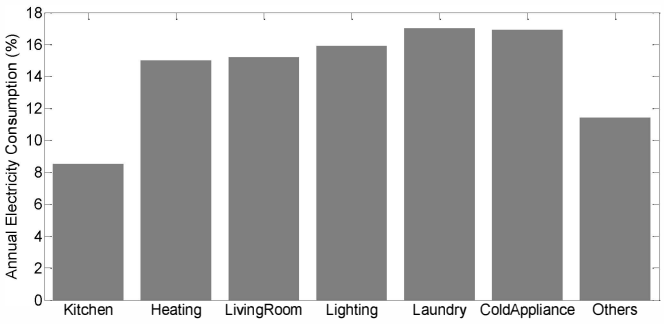

Fig. 2. Annual electricity consumption of household appliances in an average household in Netherlands in 2010 (Agentschap NL, 2011).

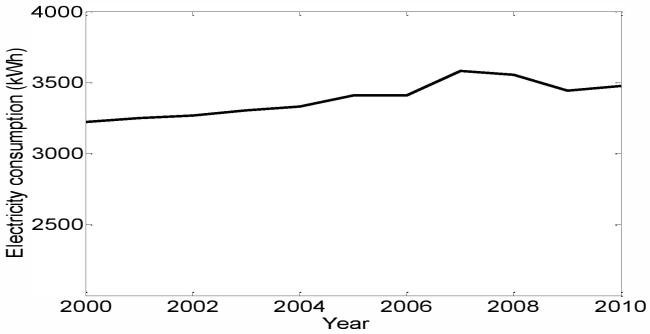

Fig. 3. The trend in average annual electricity consumption of Dutch households (Agentschap NL, 2011)

Authorized licensed use limited to: VNR Vignana Jyothi Inst of Eng & Tech. Downloaded on March 24,2026 at 10:32:58 UTC from IEEE Xplore. Restrictions apply.

IV. The Home Energy Management Concept

Home automation is a matured technology. The use of thermostats in the early 1900s to maintain heat levels was a major step in ensuring efficient use of energy. The system has grown over the years into other fields such as security systems, entertainment, energy-efficient appliances, HVAC control, e-health and remote controls [8].

The concept of smart grids with its inherent ICT makes energy management in the power sector more effective and efficient. Though growth in ICT systems far exceeds energy consumptions in other areas, it can reduce the energy consumption of other sectors by introducing intelligent monitoring and management systems [9]. SHEMS, as a mini smart grid, can contribute to reduction in energy consumption of household appliances using intelligent monitoring and control systems. The home environment is an excellent reduced model of a public grid. It could be termed a "home microgrid" as it can comprise generation, distribution, and load all encapsulated in this environment. The implementation of low-power wireless sensors networks enhances this smart grid concept in homes enabling EMS capabilities [10]. SHEMS therefore balances energy efficiency and savings with comfort levels of the inhabitants.

In summary smart home energy management offers either of the following functionalities [11]:

a. *Informative, where* overviews of information about energy usage data in various graphical forms (bar graphs, pie charts, etc) to the users.

b. *Automated:* this offers customer options to set priorities and wishes for the operation of household appliances and/or local generations.

c. *Advanced:* this includes information, automation and control either locally or from third parties.

d. *Integrated:* this has all the features of the advanced system mentioned in *(c),* but also includes the possibility for forecasting and scheduling of loads and generations at household levels.

V. Modelling and Simulation

A MATLAB/Simulink model is designed to investigate the different aspects of SHEMS such as control algorithms, demand side management and demand response, and forecasting and scheduling of loads and generation, focusing on the added value SHEMS can bring to residential customers. In this paper, optimization of energy usage is investigated. Fig. 4 shows a model of SHEMS' architecture for the optimization analyses with the following as key components:

1. *Residential loads:* This is divided into two: grouped loads and individual (un)controllable loads. These loads are modelled from either measured data from residential customers or simulated with Simulink simpowersystems.
2. *Local generation*: In some households, photovoltaic system, solar collectors or micro-CHPs are present for onsite generation. The model implements both simulated and measured generations. Heat pump is considered as "prosumer" – an electrical load and a heat generator.
3. *Home automation*: This consists of alarms and sensors. For this paper, this block is modelled as a dummy (empty) block.
4. *Utility:* The utility block is used to send signals to households based on the current situation in the network. This is done via the smart meter located at the customer's end.
5. *Smart Meter*: The smart meter is the interface between the utilities and the household as the case is in Netherlands. The signals from the utilities are retrieved to the customers SHEMS through the smart meter via the P1 port for onward processing. It also measures separately the energy consumption and the one fed into the grid for the purpose of tariffs.
6. *Internet:* The internet is modelled as data exchange centre for the SHEMS. Variable tariffs, climatic data

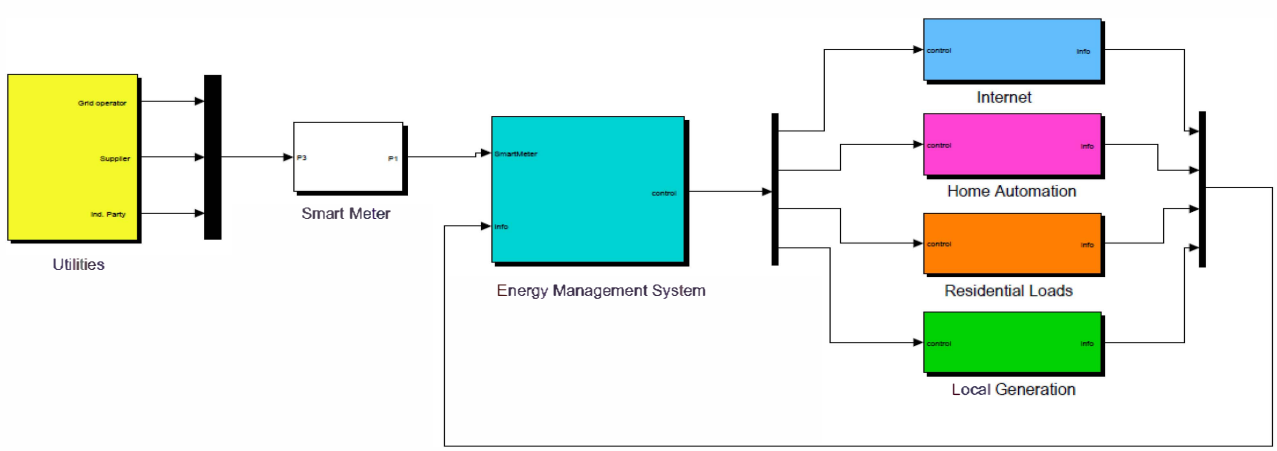

Fig. 4. Model of home energy management system in MATLAB/Simulink

Authorized licensed use limited to: VNR Vignana Jyothi Inst of Eng & Tech. Downloaded on March 24,2026 at 10:32:58 UTC from IEEE Xplore. Restrictions apply.

and other useful information are retrieved via this block. It is the point for data exchange between the customer and third parties.

7. *Energy Management System*: This is the heart of intelligence and control. All the measured, sensed, downloaded and exchanged data are processed in this block. The EMS also manages the energy consumption by balancing generation with demand or minimizing cost as the case may be.

VI. Residential Energy Optimization

Energy optimization involves effective and efficient use of energy (either generated locally or from the utility grid). For residential customers, it is reflected in the reduction of their energy bills or a good balance between local generation and consumption. In general homeowners with on-site generation are more inclined to incorporate SHEMS as opposed to the normal household residents. In this section, optimization schemes are investigated for a grid-connected household with on-site generation. Energy flows bi-directionally (to and from the utility grid) and there is no local storage. Two parameters are chosen for the integrated optimization: cost and local demand-supply optimizations.

A. Integrated optimization

The model investigates the possibilities of SHEMS optimizing the costs and efficient energy consumption of the average Dutch household. The variable tariffs are used for the optimization as it provides the possible future scenario of dynamic tariff. Table 1 shows representative energy tariff for the Netherlands which is also used for the optimization. In general residential customers pay more for taxes for every kilowatt-hour of electricity (65% of the unit price) than the actual electricity consumed. Demand-supply optimization is also designed to match the on-site generation with local consumption. The model implements the optimization process using the following:

1. Measured data from residential customer with PV, solar collector and heat pump (no natural gas involved).
2. Measurements are done for grouped loads: living room, bedrooms, kitchen, office, garage, lobby and toilets.
3. Seven appliances are measured individually of which four loads are considered controllable (can be shifted in time without affecting customers comfort). These include: dishwasher, washing machine, tumble dryer and heat pump (limited flexibility).

VII. Model Results and Analysis

Fig. 5 shows the measured electricity generation from the installed PV system and the corresponding load consumption for a week. It can be observed that, generally, the peak load consumption occurs two to three hours after the peak electricity generation from the PV. This is quite expected as peak generation occurs in the midday (12: 000 – 15:00) whilst customers return to their homes between 17:00 – 18:00hrs.

In Fig. 6, a comparison is made between the cumulative electricity costs for normal energy consumption and that for a SHEMS-enabled optimization model, if the household had no generation. It shows a potential savings of about 40 Euros in five months of the measurements. However, the optimization is implemented with the following assumptions:

- Standby power consumptions for laundry appliances can be detected and sockets completely switched off via remote control.
- The heat pump is allowed to operate a degree less than the default operation.
- The household has variable (peak and off-peak) tariffs.

Though there is a subsidy of 15% of the purchase price of a solar PV installation as from July 2, 2012, (solar panels and supporting equipment such as inverters) [17], residential customers are paid a feed-in tariff of 7 to 10 euro-cents/kWh of electricity delivered to the grid unless an agreement is reached between the energy supplier and the customer. For this simulation, two cases are analysed.

Case 1: In this scenario a feed-in tariff of 9 euro-cents (only the energy cost) is paid to residential customers. Fig. 7 shows that the household generated about 1700kWh electricity more than consumed for five months period. This net energy would have cost the customer about 400 Euros should the energy flow has been from the utility. However, the cumulative net electricity cost, shown in Fig. 8 *case 1,* indicates that the customer still have to pay about 10 Euros to the utility. In such a scenario, a system to balancing local generation with consumption will save the residential customer about 14 euro-cents /kWh (which is cost of taxes). In the situation where there are no feed-in tariffs, the need for local demand-supply matching and optimization becomes more crucial.

Case 2: In the Netherlands, residential customers with on-site generation have separate electricity meters for consumed and fed-in electricity. The same kWh price applies for both feed-in and consumed energy unless the customer delivers more than he consumes on annual basis. In that case the customer is paid 9 euro-cents for the net energy delivered to the grid. Fig. 8 *case 2* shows that the customer this time earns about 175 Euros for the extra electricity supplied.

TABLE I
ELECTRICITY TARIFFS FOR RESIDENTIAL CONSUMERS IN THE NETHERLANDS

Tariffs	Supply tariff (€/kWh)	Energy tax (€/kWh)	VAT (€/kWh)	Total (€/kWh)
Standard	0.0844	0.114	0.036	**0.2343**
Peak (07:00 – 21:00)	0.0942	0.114	0.036	**0.2441**
Off-peak (21:00 – 07:00) and Weekends	0.0696	0.114	0.036	**0.2195**

Authorized licensed use limited to: VNR Vignana Jyothi Inst of Eng & Tech. Downloaded on March 24,2026 at 10:32:58 UTC from IEEE Xplore. Restrictions apply.

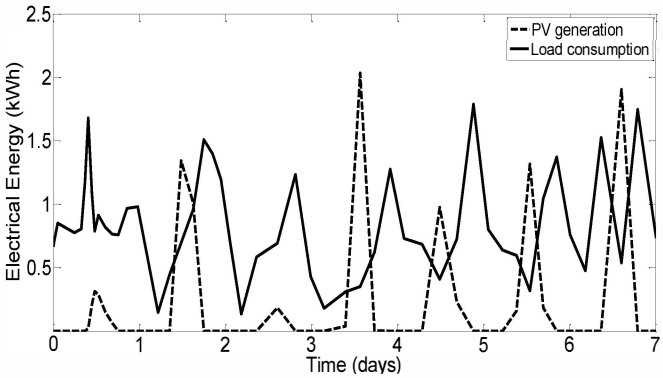

Fig. 5. Measured PV generation and total household load consumption profiles

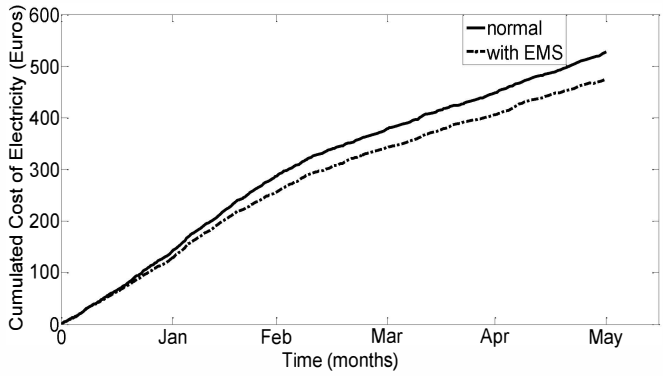

Fig. 6. Comparison of cumulative electricity cost between normal operation and SHEMS enabled operations.

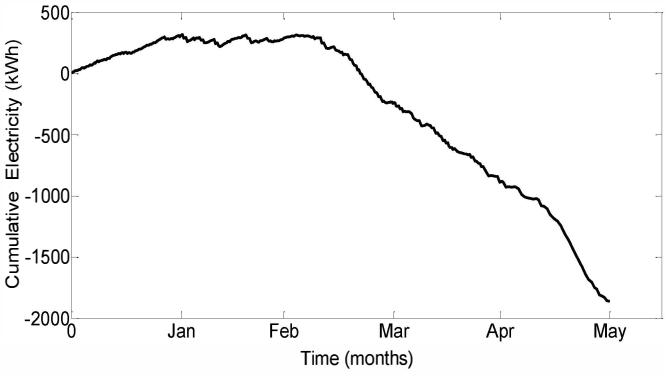

Fig. 7. Cumulative electricity for household. Positive indicates consumption from the grid and negative indicates feed-in to the grid

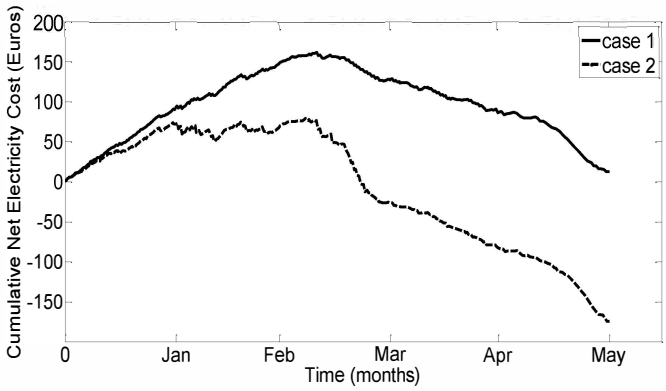

Fig. 8. Cumulative net electricity cost consumed and generated by the house from two cases of feed-in tariffs

VIII. DEMAND-SUPPLY OPTIMIZATION

If local generation could be made to match local consumptions, peak loading or peak generation can be minimized. In Fig. 5, it can be observed that peak generation and peak load occur at different times. This might not have cost effects for the residential customer (especially for *case 2* described above); however for energy flows and network optimization, shaving of the peaks is preferred. Therefore, integration of local SHEMS with a concentrator for streets or neighbourhoods can offer better optimization for the network. To investigate this, aggregated household model (see Fig. 9) is developed. The inputs to this model are smart meter measurements from residential customers. Two hundred households are investigated and are distributed per feeder as indicated in Table 2.

Fig. 11 shows the energy demand profiles of the residential feeders with 25, 50, 100 and 200 households. It can be observed that the "peaks" and "valleys" of energy demand occur about the same times irrespective of the number of aggregated households.

Could integrated SHEMS for a street or neighbourhood offer solution to peak shaving and valley filling? To investigate this possibility, three residential loads (washing machine, dishwasher and tumble dryer) considered to be flexible are modelled and simulated. Table 3 indicates the penetration level of each appliance in Dutch homes and their respective energy demands per operational cycle. Fig. 10 shows the energy demand profiles of the loads. The optimization is processed with the following assumptions:

a. Residential customers load their dishes or clothes into the respectively appliances and leave the time of operation to the SHEMS to decide.
b. The flexible loads can be controlled remotely by a local SHEMS.
c. Each local SHEMS communicates with a central coordinator for the street or neighbourhood.

TABLE 2
HOUSEHOLDS DISTRIBUTION PER FEEDER GROUP

Feeder	No. of households
Feeder 1	23
Feeder 2	42
Feeder 3	30
Feeder 4	57
Feeder 5	48
Total	**200**

TABLE 3
FLEXIBLE RESIDENTIAL APPLIANCES

Appliance	Penetration level (%)	Energy demand per operational cycle (kWh)
Washing machine	95	0.96
Tumble dryer	60	2.40
Dish washer	50	1.24

Authorized licensed use limited to: VNR Vignana Jyothi Inst of Eng & Tech. Downloaded on March 24,2026 at 10:32:58 UTC from IEEE Xplore. Restrictions apply.

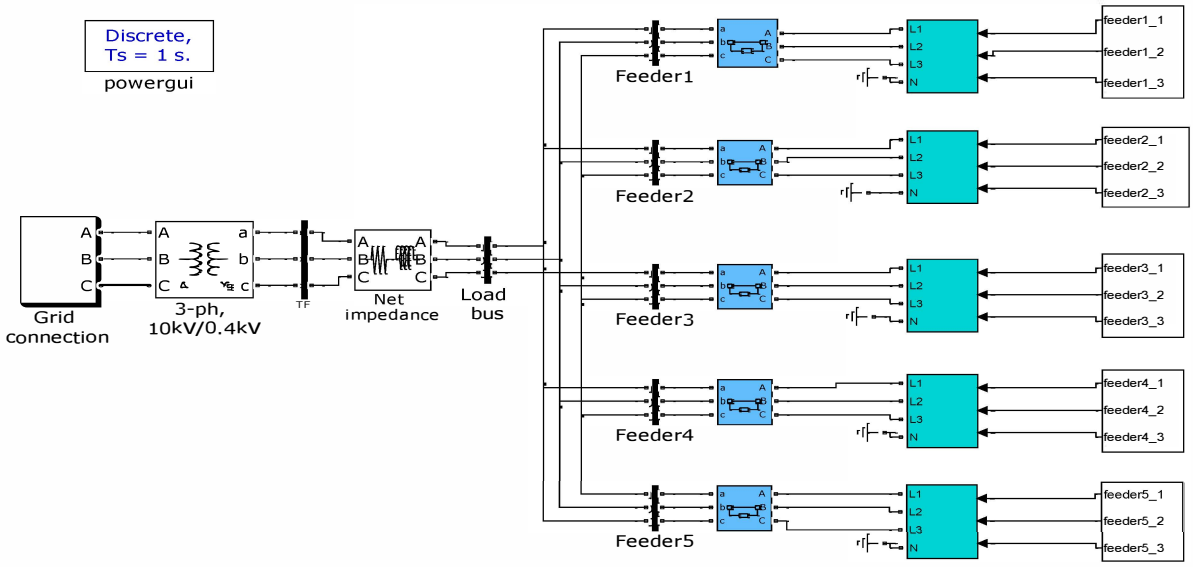

Fig. 9. Model for the analysis of aggregated households energy profiles in MATLAB/Simulink

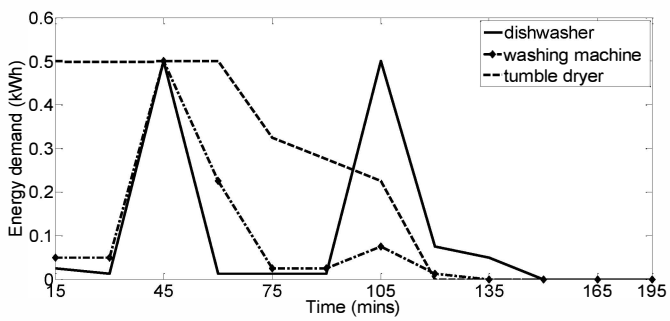

Fig. 10. Energy demand profiles for three flexible household appliances: washing machine, dishwasher and tumble dryer (source University of Bonn)

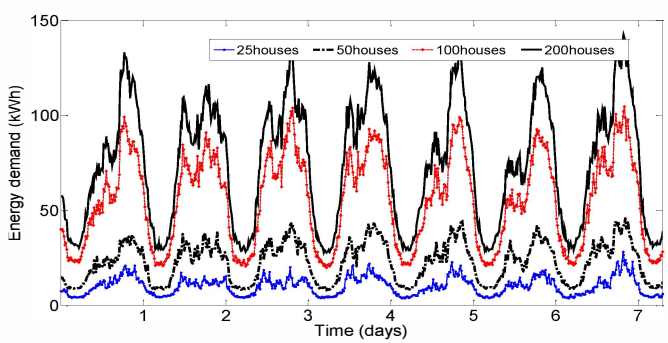

Fig. 11. Energy demand profiles for residential feeders with 25, 50, 100 and 200 households.

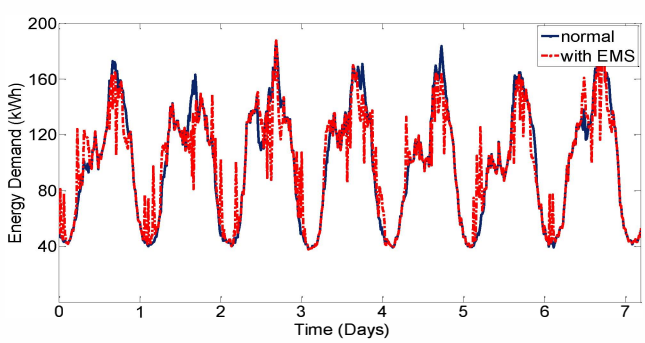

Fig. 12. Energy demand profiles for the 200 households with and without home energy management systems.

IX. Results and Analysis

In Fig. 12, a comparison is made between the energy demand profiles for 200 houses for the normal situation and that of coordinated SHEMS. The results indicate that an aggregation of SHEMS can help in peak shaving and valley filling within the context of the assumptions mentioned above. In this model, three appliances were considered flexible. However, if there are more flexible domestic loads the impacts of peak shaving and valley filling can be significant. Also with the advent of high energy-demanding technologies, such as heat pumps and electric cars, SHEMS will be crucial in shaping the residential load profile of the future.

X. Enhancing Energy Efficiency And Savings by Smart Home Solutions

If residential customers are made known of their energy consumptions in shorter periods (e.g. from real-time to daily consumptions), it could reduce domestic consumption by 15%. [12]. Using artificial intelligence allows better utilization of existing assets and possible reduction in standby power of appliances [13]. For instance, using artificial neural networks to adapt to users' behaviour ensures efficient appliance utilization saving energy. However, it requires high level EMS to minimize energy losses whilst maintaining users' comfort requirements [14].

SHEMS' potential applications are enormous. It can be used in demand side management and demand response at household level. Pre-storage of heat or cold before peak periods opens more opportunities for fast and flexible demand response. Study shows that the peaks of power consumption are minimized simply by optimal mix of the various residential types. It indicates that demographic composition of the neighbourhood and the type of housing influence the flexibility, intelligence and suitability of the energy management systems to be implemented [15].

Authorized licensed use limited to: VNR Vignana Jyothi Inst of Eng & Tech. Downloaded on March 24,2026 at 10:32:58 UTC from IEEE Xplore. Restrictions apply.

XI. Smart home Energy management solutions

Some SHEMS' solutions have moved from pilots to fully-implemented projects. The PowerMatcher technology, during pilots' tests, can result in 30% peak reduction of heat demand if residents are willing to accept 1degree temperature deviation [16]. DOMOSEC with independent floor control modules is applied in buildings to improve the energy efficiency [16]. Other smart technologies are ACHE, AMIGO, SOCRADES, eDiana, AIM and IHS. With advancement in both wireless and wired technologies, and the use of embedded system technologies, SHEMS are expected to grow in the coming decades particularly for new residential buildings.

XII. Barriers to Smart Home Energy Management Solutions

Despite its perceived benefits there are barriers to SHEMS. There are uncertainties among customers regarding the effectiveness of SHEMS. Secondly, smart home solutions are still relatively expensive in spite of the increase in its market share. Information and education related problems are also common hindrances to the implementation of SHEMS. Sometimes residential customers have no clue or are misinformed about the functionalities of SHEMS. Some considers it waste of investment whilst others think of the network security and privacy, as well as the health issues regarding increasing wireless networks at home. Solutions to these challenges are to be the focus of a subsequent publication.

XIII. Conclusion

Though faced with high cost and technical challenges, SHEMS has the potential for optimizing residential energy generation and consumption. In this paper the cost and demand-supply optimizations are investigated with MATLAB/Simulink model for a typical Dutch household. The cost optimization option is much influenced by the type of feed-in tariff implemented. The demand-supply optimization is effective for peak shaving and minimization of network losses for aggregation of households. The key points of this paper are:

- Residential sector electricity consumption is significant and its flexibility cannot be overlooked.
- A more transparent and customer friendly energy aware system is necessary as a first step.
- Smart home energy management systems are enabling technologies to improve energy efficiency and realize savings through automated actions.
- Cost optimization for residential customer and demand-supply optimization for the network can be implemented.
- Successful pilot projects affirm that SHEMS are technologies for the future.
- Conservatism, cost and privacy are key barriers to large scale implementation of SHEMS.

XIV. References

[1] W.C. Prince. (2012, Mar.) World Development Indicators, World Bank Data. [Online]. Available: http://data.worldbank.org/data-catalog/world-development-indicators

[2] Energy in the Netherlands 2011 (2011, Dec.), Printed by Zalsman B. V. Zwolle. [Online]. Available: http://www.energie-nederland.nl/wp-content/uploads/2011/08/Energie-in-Nederland-2011.pdf

[3] P. Torcellini, S. Pless, M. Deru, and D. Crawley, "Zero energy buildings: a critical look at definitions", Journal, ACEEE Summer Study Pacific Groove California, USA, Aug. 2006 pp 14 – 18.

[4] Europe's Energy Portal (2012, Mar.). Fuel Prices: Electricity Households. [Online]. Available: http://www.energy.eu/

[5] World Energy Council (2011, Dec.). Energy Efficiency Policies around the World: Review and Evaluation. [Online]. Available: http://www.worldenergy.org/

[6] My Energy Solutions (2012, Mar.), "Energy efficiency is doing more with less energy", Manhattan Beach, CA. [Online]. Avaiable: http://www.myenergysolution.com/home-energy-basics/energy-efficiency.html

[7] I. Diaz-Raineya, and J.K. Ashtonb, "Domestic energy efficiency measures, adopter heterogeneity and policies to induce diffusion," *6th International Conference on the European Energy Market,* vol., no., pp.1-8, 27-29 May 2009.

[8] M.A, Zamora-Izquierdo, J. Santa, and A.F. Gomez-Skarmeta, "An Integral and Networked Home Automation Solution for Indoor Ambient Intelligence," *IEEE Pervasive Computing,* vol.9, no.4, pp.66-77, Oct-Dec. 2010

[9] P. Kordik, M. Hasaj, M.Tvrdy, M. Snorek, "Building Automation Simulator and Control Strategy for Intelligent and Energy Efficient Home," *Third European Symposium on Computer Modeling and Simulation, 2009. EMS '09.* , vol., no., pp.154-159, 25-27 Nov. 2009

[10] C.E.P Jordan Cordova, B.Asare-Bediako, G.M.A. Vanalme, W.L Kling., "Overview and Comparison of Leading Communication Standard Technologies for Smart Home Area Networks Enabling Energy Management Systems", *46th International Universities' Power Engineering Conference,* Soest, Germany, 5- 8th Sep. 2011.

[11] S. Harkin (2011, Autumn) "Home energy management in Europe, lots of solutions, but what's the problem", Delta Energy & Environment, UK [Online]. Available: http://www.delta-ee.com/downloads/2011/Delta_Research_Paper_Home_Energy_Management_in_Europe_Autumn_2011.pdf

[12] M. Jahn, M. Jentsch, C.R. Prause, F. Pramudianto, A. Al-Akkad, and R. Reiners, "The Energy Aware Smart Home," *5th International Conference on Future Information Technology (FutureTech),* vol., no., pp.1-8, 21-23 Busan, Korea, May 2010.

[13] In-depth energy - The energy drain of idleness *Engineering & Technology* , vol.2, no.8, pp.18-19, Aug. 2007.

[14] H. Bozic, "Optimization of Energy Consumption and Energy Efficiency Measures with MARKAL Model," *International Conference on Clean Electrical Power,* vol., no., pp.299-301, 21-23 Capri, Italy, May 2007.

[15] B. Asare-Bediako, L.M.Ramirez Elizondo, P.F. Ribeiro, W.L. Kling, and G. C. Paap, "Analysis and Development of Electricity and Heat Load Profiles for Intelligent Energy Management Systems", 46th International Universities' Power Engineering Conference, Soest, Germany, 5th - 8th Sep. 2011.

[16] A. Molderink, V. Bakker, M.G.C. Bosman, J.L. Hurink, and G.J.M Smit, "Management and Control of Domestic Smart Grid Technology," *IEEE Transactions on Smart Grid,* vol.1, no.2, pp.109-119, Sept. 2010.

[17] Agentschap NL, Ministerie van Economische Zaken, Landbouw en Innovatie (2012, June). Subsidieregeling Zonnepanelen. [Online] Available: http://www.agentschapnl.nl/programmas-regelingen/subsidieregeling-zonnepanelen

Authorized licensed use limited to: VNR Vignana Jyothi Inst of Eng & Tech. Downloaded on March 24,2026 at 10:32:58 UTC from IEEE Xplore. Restrictions apply.

XV. Biographies

Ballard Asare-Bediako (S'2010) received his BSc in Electrical and Electronic Engineering from Kwame Nkrumah University of Science and Technology Kumasi-Ghana and MSc in Sustainable Energy Technology from University of Twente, Enschede in The Netherlands.

Currently, he is a PhD researcher at the Energy System Group of the Faculty of Electrical Engineering in Eindhoven University of Technology. His research is focused on energy management solutions for the built environment

Wil L. Kling (M'95) was born in Heesch, The Netherlands in 1950. He received the M.Sc. degree in electrical engineering from the Eindhoven University of Technology, The Netherlands, in 1978. From 1978 to 1983 he worked with Kema and from 1983 to 1998 with Sep. Since then up til the end of 2008 he was with TenneT, the Dutch Transmission System Operator, as senior engineer for network planning and network strategy. Since 1993 he was a part-time Professor at the Delft University of Technology and since 2000 also a part-time Professor in the Electric Power Systems Group at the Eindhoven University of Technology, The Netherlands. From December 2008 he is appointed as a full-time professor and a chair of Electrical Energy Systems group at the Eindhoven University of Technology. He is leading research programs on distributed generation, integration of wind power, network concepts and reliability.

Mr. Kling is involved in scientific organizations such as Cigre and IEEE. He is the Dutch Representative in the Cigre Study Committee C6 *Distribution Systems and Dispersed Generation*.

Paulo F. Ribeiro (M'78–SM'88–F'03) received his Ph.D. from the University of Manchester, Manchester-UK, in 1985. Presently, he is at Eindhoven University of Technology, the Netherlands. He is Registered Professional Engineer in the State of Iowa, USA and an European Engineer (EurIng).

Currently, he is with the Eindhoven University of Technology, the Netherlands. Dr. Ribeiro is active in the IEEE, CIGRE, and IEC technical working groups. He is a Registered Professional Engineer in the State of Iowa and a European Engineer (EurIng).

Authorized licensed use limited to: VNR Vignana Jyothi Inst of Eng & Tech. Downloaded on March 24,2026 at 10:32:58 UTC from IEEE Xplore. Restrictions apply.