PIC32MX5XX/6XX/7XX

32-bit Microcontrollers (up to 512 KB Flash and 128 KB SRAM) with Graphics Interface, USB, CAN, and Ethernet

Operating Conditions

- 2.3V to 3.6V, -40ºC to +105ºC, DC to 80 MHz

Core: 80 MHz/105 DMIPS MIPS32® M4K®

- MIPS16e® mode for up to 40% smaller code size
- Code-efficient (C and Assembly) architecture
- Single-cycle (MAC) 32x16 and two-cycle 32x32 multiply

Clock Management

- 0.9% internal oscillator
- Programmable PLLs and oscillator clock sources
- Fail-Safe Clock Monitor (FSCM)
- Independent Watchdog Timer
- Fast wake-up and start-up

Power Management

- Low-power management modes (Sleep and Idle)
- Integrated Power-on Reset, Brown-out Reset
- 0.5 mA/MHz dynamic current (typical)
- 41 µA IPD current (typical)

Graphics Features

- External graphics interface with up to 34 Parallel Master Port (PMP) pins:
  - Interface to external graphics controller
  - Capable of driving LCD directly with DMA and internal or external memory

Analog Features

- ADC Module:
  - 10-bit 1 Msps rate with one Sample and Hold (S&H)
  - 16 analog inputs
  - Can operate during Sleep mode
- Flexible and independent ADC trigger sources
- Comparators:
  - Two dual-input Comparator modules
  - Programmable references with 32 voltage points

Timers/Output Compare/Input Capture

- Five General Purpose Timers:
  - Five 16-bit and up to two 32-bit Timers/Counters
- Five Output Compare (OC) modules
- Five Input Capture (IC) modules
- Real-Time Clock and Calendar (RTCC) module

Communication Interfaces

- USB 2.0-compliant Full-Speed OTG controller
- 10/100 Mbps Ethernet MAC with MII and RMII interface
- CAN module:
  - 2.0B Active with DeviceNet™ addressing support
- Six UART modules (20 Mbps):
  - Supports LIN 1.2 protocols and IrDA® support
- Up to four 4-wire SPI modules (25 Mbps)
- Up to five I^2C modules (up to 1 Mbaud) with SMBus support
- Parallel Master Port (PMP)

Direct Memory Access (DMA)

- Up to eight channels of hardware DMA with automatic data size detection
- 32-bit Programmable Cyclic Redundancy Check (CRC)
- Six additional channels dedicated to USB, Ethernet and CAN modules

Input/Output

- 15 mA or 10 mA source/sink for standard V_{OH}/V_{OL} and up to 22 mA for non-standard V_{OH1}
- 5V-tolerant pins
- Selectable open drain and pull-ups
- External interrupts

Qualification and Class B Support

- AEC-Q100 REVG (Grade 2 -40ºC to +105ºC) planned
- Class B Safety Library, IEC 60730

Debugger Development Support

- In-circuit and in-application programming
- 4-wire MIPS® Enhanced JTAG interface
- Unlimited program and six complex data breakpoints
- IEEE 1149.2-compatible (JTAG) boundary scan

Packages

Type	QFN	TQFP			TFBGA	VTLA
Pin Count	64	64	100	100	121	124
I/O Pins (up to)	51	51	83	83	83	83
Contact/Lead Pitch	0.50	0.50	0.40	0.50	0.80	0.50
Dimensions	9x9x0.9	10x10x1	12x12x1	14x14x1	10x10x1.1	9x9x0.9

Note: All dimensions are in millimeters (mm) unless specified.

© 2009-2013 Microchip Technology Inc.

TABLE 1: PIC32 USB AND CAN – FEATURES

USB and CAN																
Device	Pins	Program Memory (KB)	Data Memory (KB)	USB	CAN	Timers/Capture/Compare	DMA Channels (Programmable/Dedicated)	UART(2,3)	SPI(3)	I²C™(3)	10-bit 1 Msps ADC (Channels)	Comparators	PMP/PSP	JTAG	Trace	Packages(4)
PIC32MX534F064H	64	64 + 12(1)	16	1	1	5/5/5	4/4	6	3	4	16	2	Yes	Yes	No	PT, MR
PIC32MX564F064H	64	64 + 12(1)	32	1	1	5/5/5	4/4	6	3	4	16	2	Yes	Yes	No	PT, MR
PIC32MX564F128H	64	128 + 12(1)	32	1	1	5/5/5	4/4	6	3	4	16	2	Yes	Yes	No	PT, MR
PIC32MX575F256H	64	256 + 12(1)	64	1	1	5/5/5	8/4	6	3	4	16	2	Yes	Yes	No	PT, MR
PIC32MX575F512H	64	512 + 12(1)	64	1	1	5/5/5	8/4	6	3	4	16	2	Yes	Yes	No	PT, MR
PIC32MX534F064L	100	64 + 12(1)	16	1	1	5/5/5	4/4	6	4	5	16	2	Yes	Yes	Yes	PT, PF, BG
PIC32MX564F064L	100	64 + 12(1)	32	1	1	5/5/5	4/4	6	4	5	16	2	Yes	Yes	Yes	PT, PF, BG
PIC32MX564F128L	100	128 + 12(1)	32	1	1	5/5/5	4/4	6	4	5	16	2	Yes	Yes	Yes	PT, PF, BG
PIC32MX575F256L	100	256 + 12(1)	64	1	1	5/5/5	8/4	6	4	5	16	2	Yes	Yes	Yes	PT, PF, BG
PIC32MX575F512L	100	512 + 12(1)	64	1	1	5/5/5	8/4	6	4	5	16	2	Yes	Yes	Yes	PT, PF, BG

Legend: PF, PT = TQFP MR = QFN BG = TFBGA TL = VTLA(5)

Note 1: This device features 12 KB boot Flash memory.

2: CTS and RTS pins may not be available for all UART modules. Refer to the **"Pin Diagrams"** section for more information.

3: Some pins between the UART, SPI and I²C modules may be shared. Refer to the **"Pin Diagrams"** section for more information.

4: Refer to **Section33.0 "Packaging Information"** for more information.

5: 100-pin devices in the VTLA package are available upon request. Please contact your local Microchip Sales Office for details.

© 2009-2013 Microchip Technology Inc.

TABLE 2: PIC32 USB AND ETHERNET – FEATURES

USB and Ethernet																	
Device	Pins	Program Memory (KB)	Data Memory (KB)	USB	Ethernet	Timers/Capture/Compare	DMA Channels (Programmable/Dedicated)	UART(2,3)	SPI(3)	I²C™(3)	10-bit 1 Msps ADC (Channels)	Comparators	PMP/PSP	JTAG	Trace	Packages(4)
PIC32MX664F064H	64	64 + 12(1)	32	1	1	5/5/5	4/4	6	3	4	16	2	Yes	Yes	No	PT, MR
PIC32MX664F128H	64	128 + 12(1)	32	1	1	5/5/5	4/4	6	3	4	16	2	Yes	Yes	No	PT, MR
PIC32MX675F256H	64	256 + 12(1)	64	1	1	5/5/5	8/4	6	3	4	16	2	Yes	Yes	No	PT, MR
PIC32MX675F512H	64	512 + 12(1)	64	1	1	5/5/5	8/4	6	3	4	16	2	Yes	Yes	No	PT, MR
PIC32MX695F512H	64	512 + 12(1)	128	1	1	5/5/5	8/4	6	3	4	16	2	Yes	Yes	No	PT, MR
PIC32MX664F064L	100	64 + 12(1)	32	1	1	5/5/5	4/4	6	4	5	16	2	Yes	Yes	Yes	PT, PF, BG
PIC32MX664F128L	100	128 + 12(1)	32	1	1	5/5/5	4/4	6	4	5	16	2	Yes	Yes	Yes	PT, PF, BG
PIC32MX675F256L	100	256 + 12(1)	64	1	1	5/5/5	8/4	6	4	5	16	2	Yes	Yes	Yes	PT, PF, BG
PIC32MX675F512L	100	512 + 12(1)	64	1	1	5/5/5	8/4	6	4	5	16	2	Yes	Yes	Yes	PT, PF, BG, TL
PIC32MX695F512L	100	512 + 12(1)	128	1	1	5/5/5	8/4	6	4	5	16	2	Yes	Yes	Yes	PT, PF, BG, TL

Legend: PF, PT = TQFP MR = QFN BG = TFBGA TL = VTLA(5)

Note 1: This device features 12 KB boot Flash memory.

2: CTS and RTS pins may not be available for all UART modules. Refer to the **"Pin Diagrams"** section for more information.

3: Some pins between the UART, SPI and I²C modules may be shared. Refer to the **"Pin Diagrams"** section for more information.

4: Refer to **Section33.0 "Packaging Information"** for more information.

5: 100-pin devices other than those listed here are available in the VTLA package upon request. Please contact your local Microchip Sales Office for details.

TABLE 3: PIC32 USB, ETHERNET AND CAN – FEATURES

USB, Ethernet and CAN																	
Device	Pins	Program Memory (KB)	Data Memory (KB)	USB	Ethernet	CAN	Timers/Capture/Compare	DMA Channels (Programmable/Dedicated)	UART(2,3)	SPI(3)	I²C™(3)	10-bit 1 Msps ADC (Channels)	Comparators	PMP/PSP	JTAG	Trace	Packages(4)
PIC32MX764F128H	64	128 + 12(1)	32	1	1	1	5/5/5	4/8	6	3	4	16	2	Yes	Yes	No	PT, MR
PIC32MX775F256H	64	256 + 12(1)	64	1	1	2	5/5/5	8/8	6	3	4	16	2	Yes	Yes	No	PT, MR
PIC32MX775F512H	64	512 + 12(1)	64	1	1	2	5/5/5	8/8	6	3	4	16	2	Yes	Yes	No	PT, MR
PIC32MX795F512H	64	512 + 12(1)	128	1	1	2	5/5/5	8/8	6	3	4	16	2	Yes	Yes	No	PT, MR
PIC32MX764F128L	100	128 + 12(1)	32	1	1	1	5/5/5	4/6	6	4	5	16	2	Yes	Yes	Yes	PT, PF, BG
PIC32MX775F256L	100	256 + 12(1)	64	1	1	2	5/5/5	8/8	6	4	5	16	2	Yes	Yes	Yes	PT, PF, BG
PIC32MX775F512L	100	512 + 12(1)	64	1	1	2	5/5/5	8/8	6	4	5	16	2	Yes	Yes	Yes	PT, PF, BG
PIC32MX795F512L	100	512 + 12(1)	128	1	1	2	5/5/5	8/8	6	4	5	16	2	Yes	Yes	Yes	PT, PF, BG, TL

Legend: PF, PT = TQFP MR = QFN BG = TFBGA TL = VTLA(5)

Note 1: This device features 12 KB boot Flash memory.

2: CTS and RTS pins may not be available for all UART modules. Refer to the **"Pin Diagrams"** section for more information.

3: Some pins between the UART, SPI and I²C modules may be shared. Refer to the **"Pin Diagrams"** section for more information.

4: Refer to **Section 33.0 "Packaging Information"** for more information.

5: 100-pin devices other than those listed here are available in the VTLA package upon request. Please contact your local Microchip Sales Office for details.

© 2009-2013 Microchip Technology Inc.

Pin Diagrams

64-Pin QFN(1)

■ = Pins are up to 5V tolerant

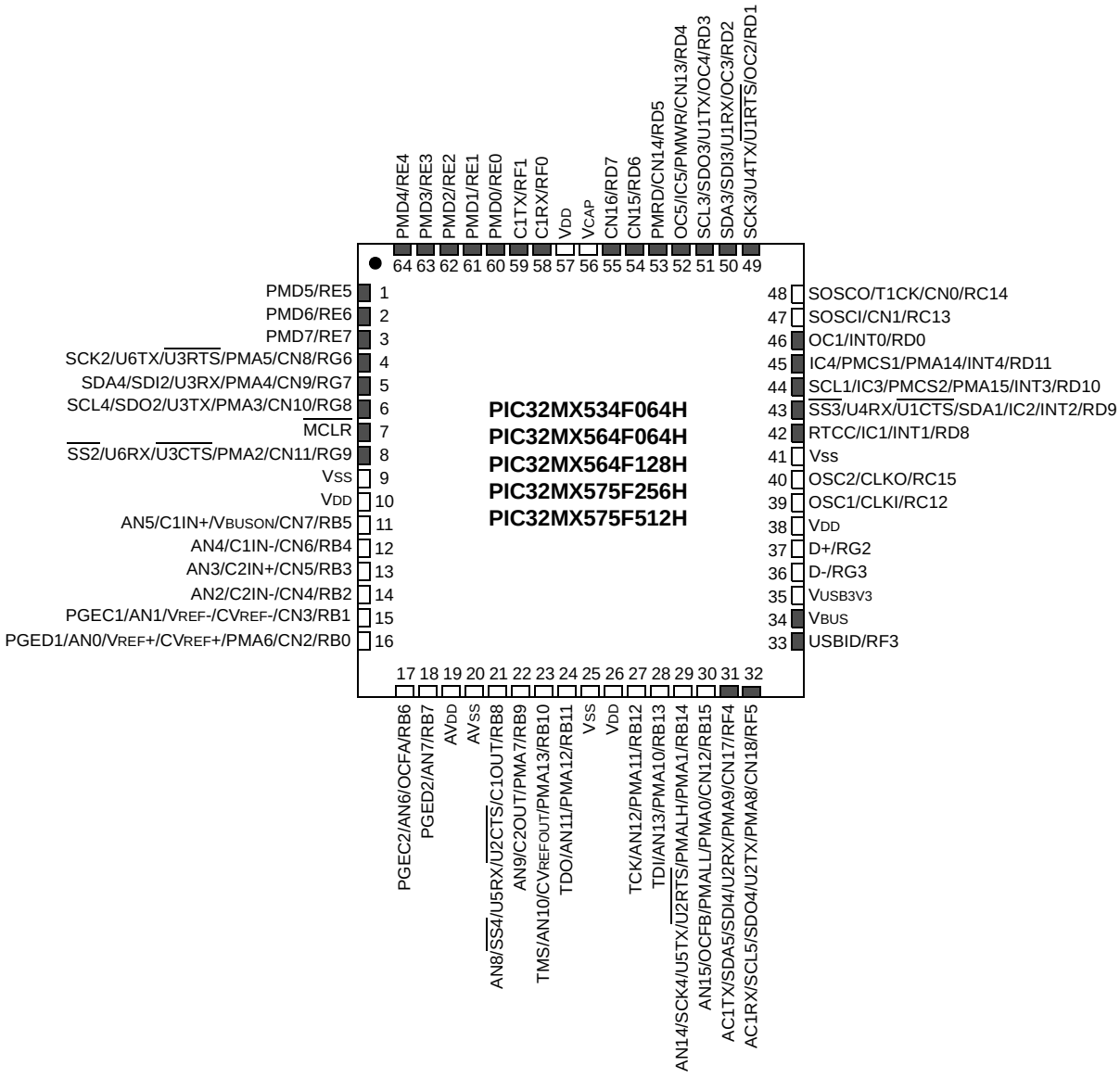

Note 1: The metal plane at the bottom of the device is not connected to any pins and is recommended to be connected to VSS externally.

Pin Diagrams (Continued)

64-Pin QFN(1)

= Pins are up to 5V tolerant

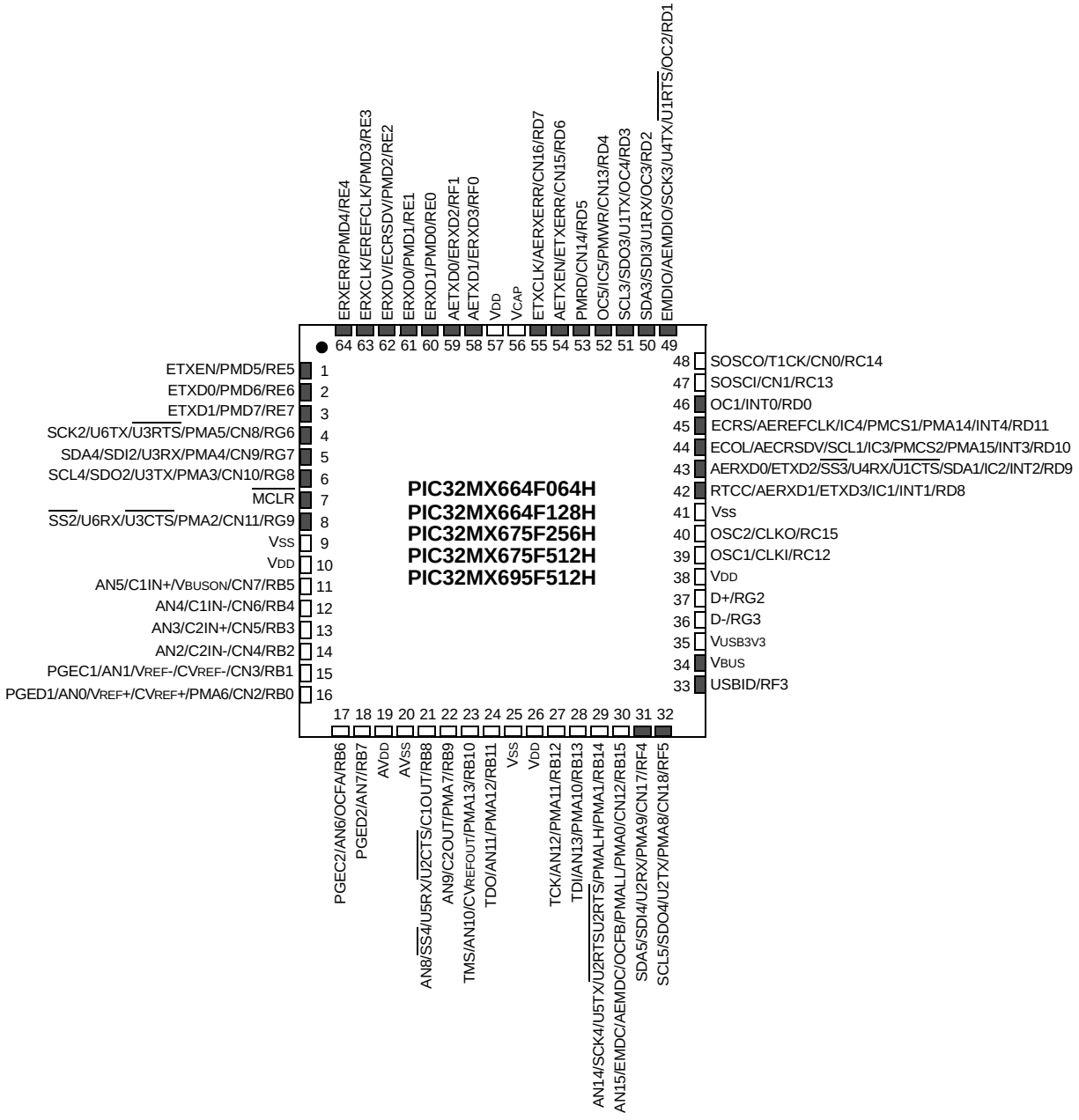

Note 1: The metal plane at the bottom of the device is not connected to any pins and is recommended to be connected to VSS externally.

© 2009-2013 Microchip Technology Inc.

Pin Diagrams (Continued)

64-Pin QFN(1)

= Pins are up to 5V tolerant

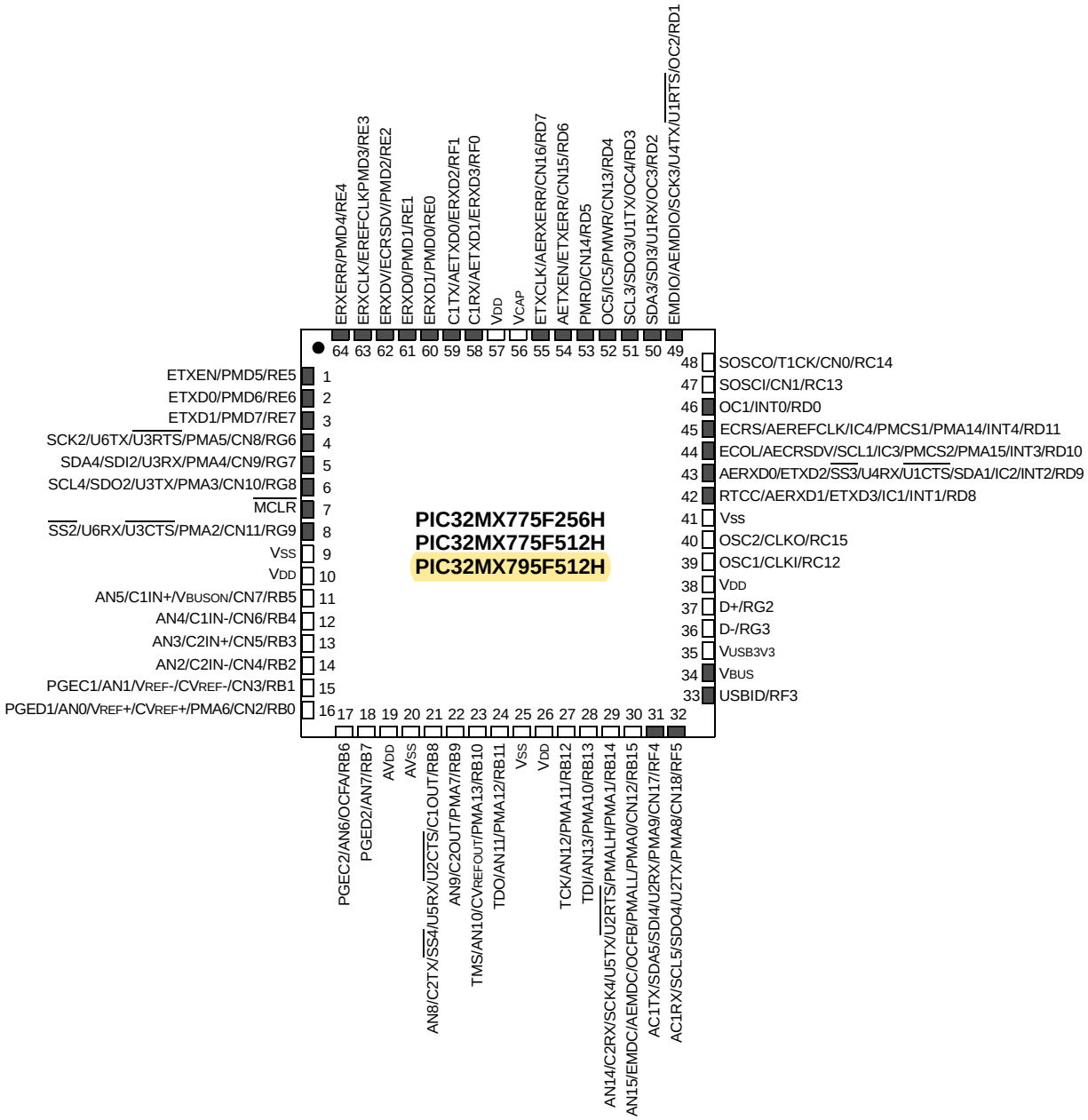

Note 1: The metal plane at the bottom of the device is not connected to any pins and is recommended to be connected to VSS externally.

Pin Diagrams (Continued)

64-Pin QFN(1)

= Pins are up to 5V tolerant

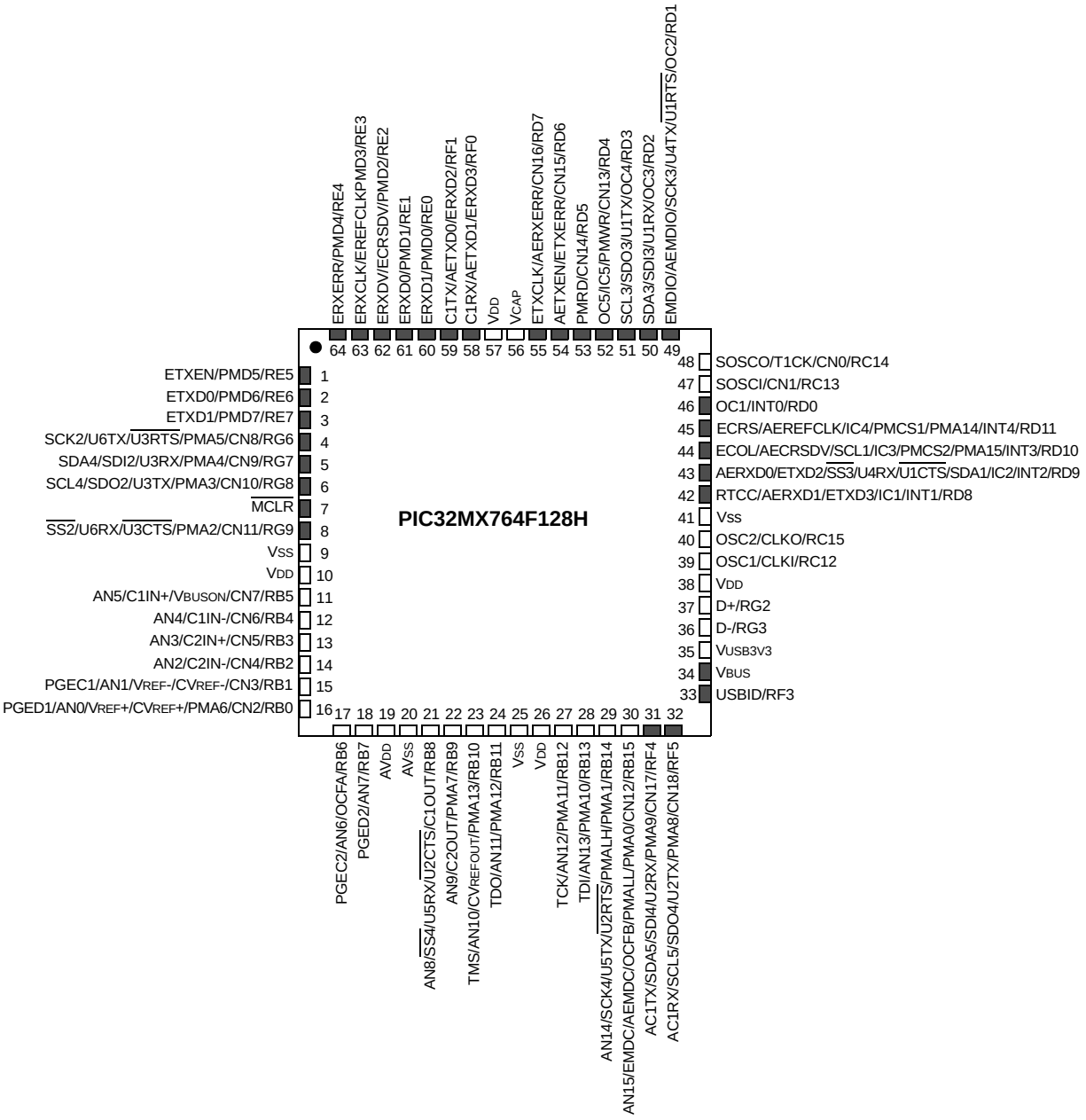

Note 1: The metal plane at the bottom of the device is not connected to any pins and is recommended to be connected to VSS externally.

© 2009-2013 Microchip Technology Inc.

Pin Diagrams (Continued)

64-Pin TQFP

= Pins are up to 5V tolerant

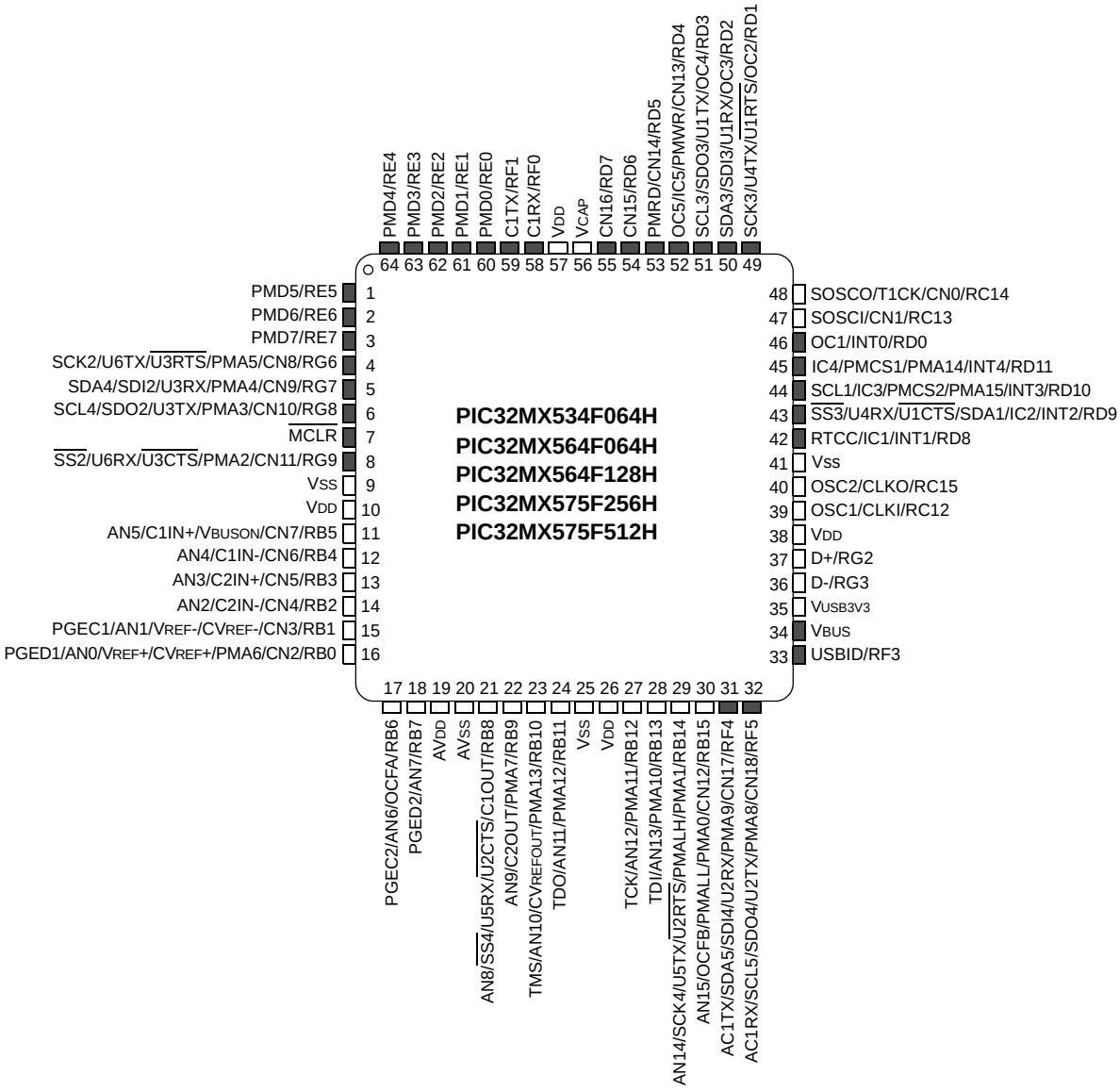

Pin Diagrams (Continued)

64-Pin TQFP

= Pins are up to 5V tolerant

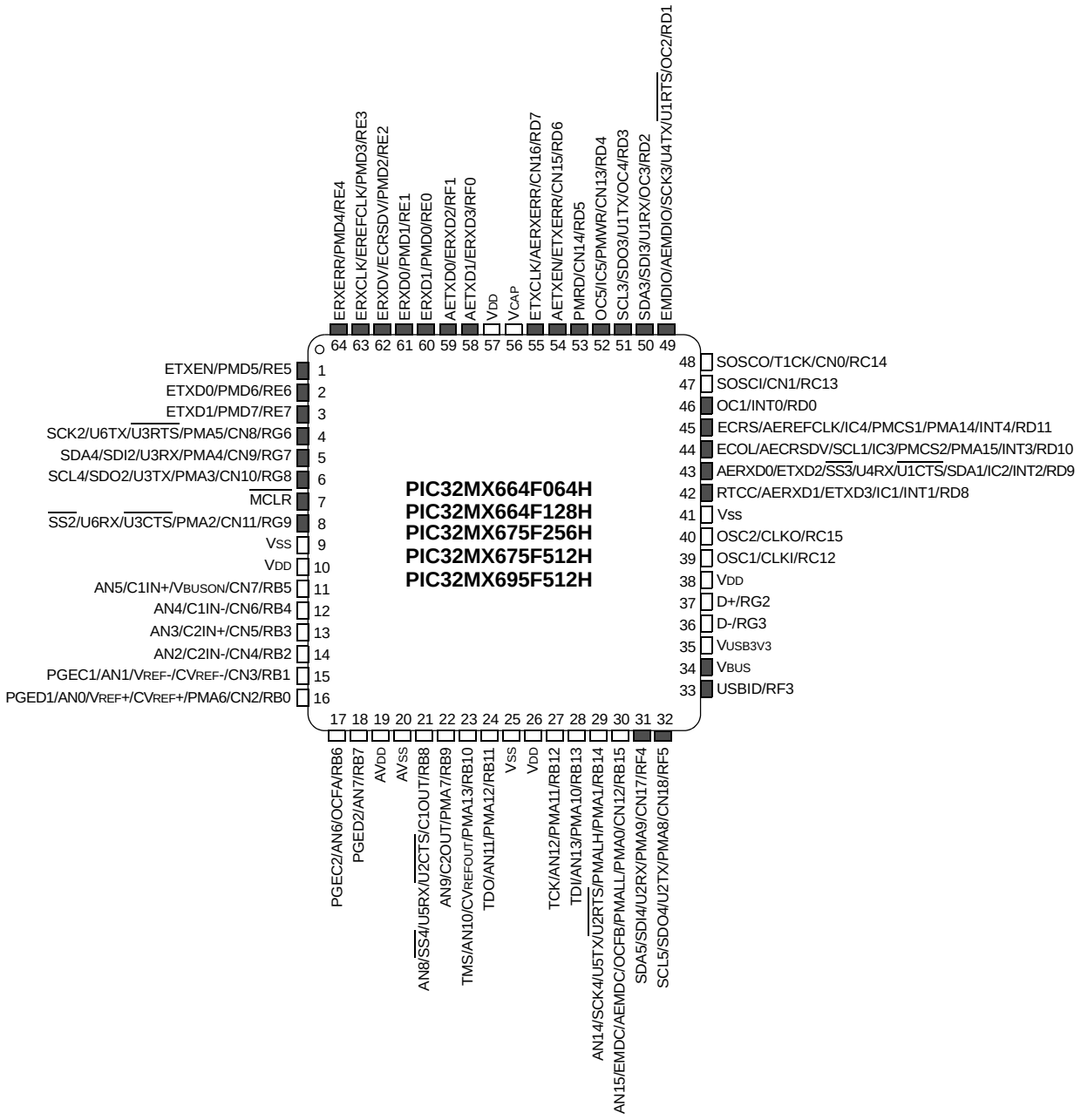

© 2009-2013 Microchip Technology Inc.

Pin Diagrams (Continued)

64-Pin TQFP

= Pins are up to 5V tolerant

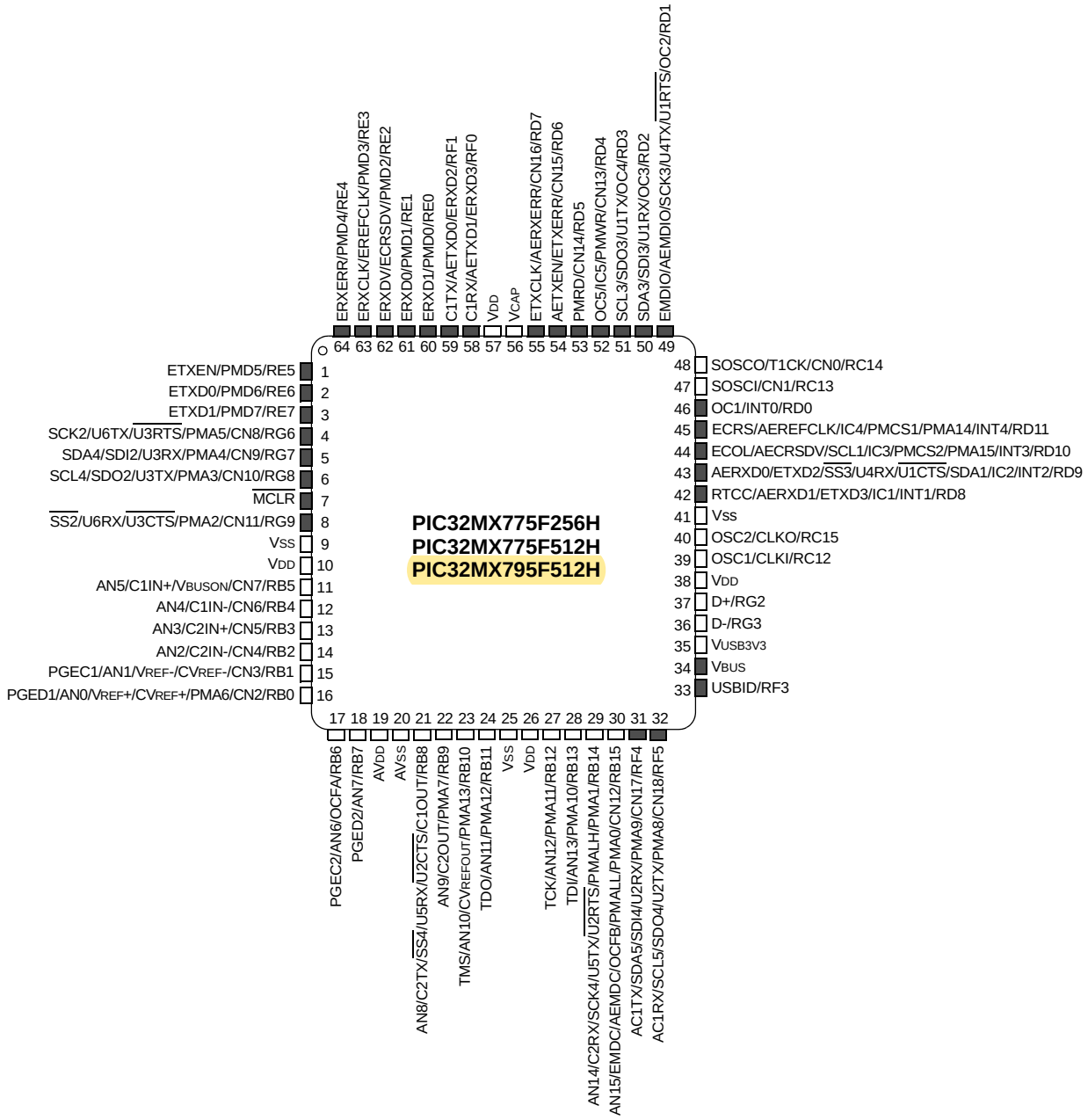

Pin Diagrams (Continued)

64-Pin TQFP

= Pins are up to 5V tolerant

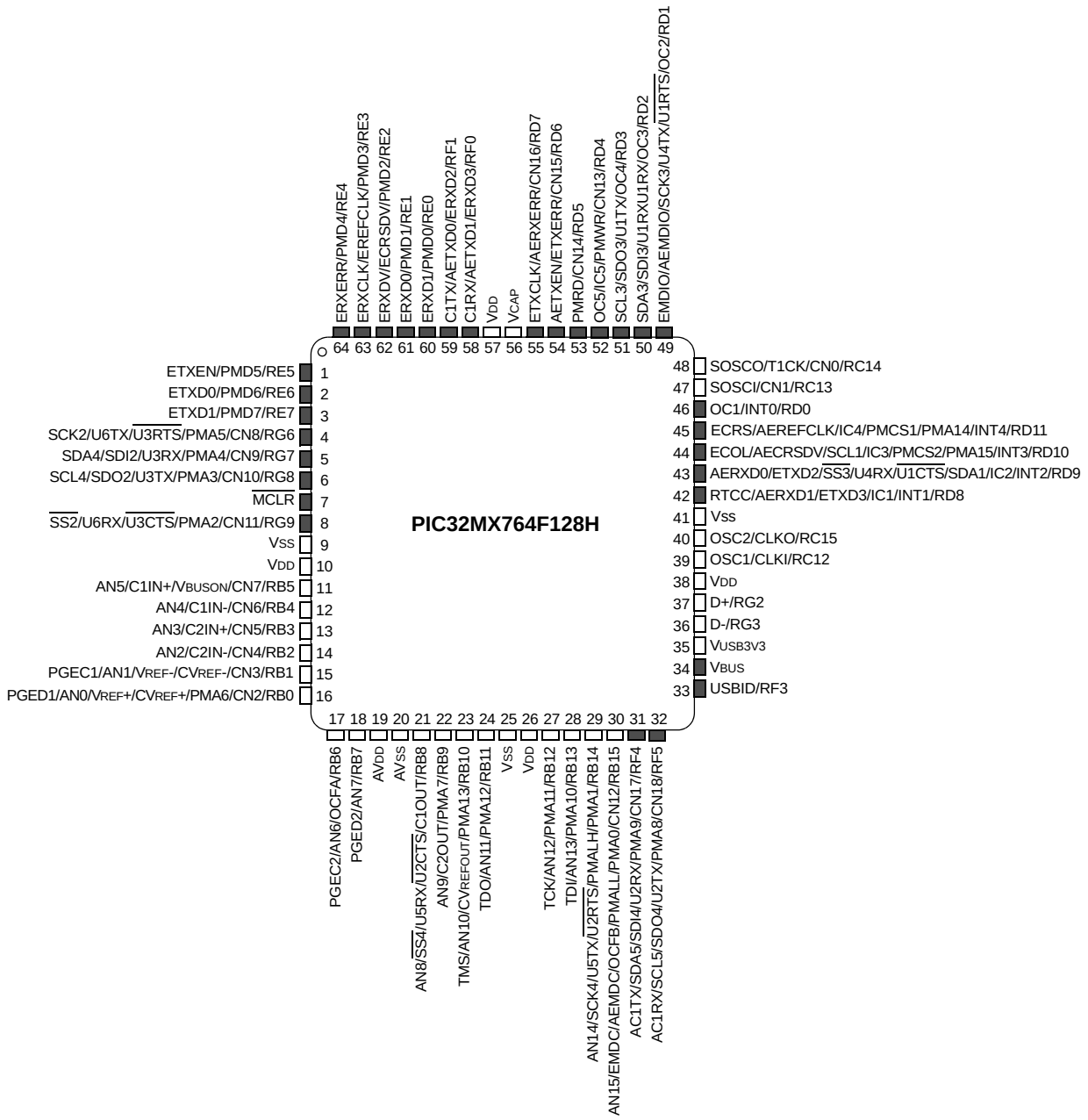

© 2009-2013 Microchip Technology Inc.

Pin Diagrams (Continued)

100-Pin TQFP

= Pins are up to 5V tolerant

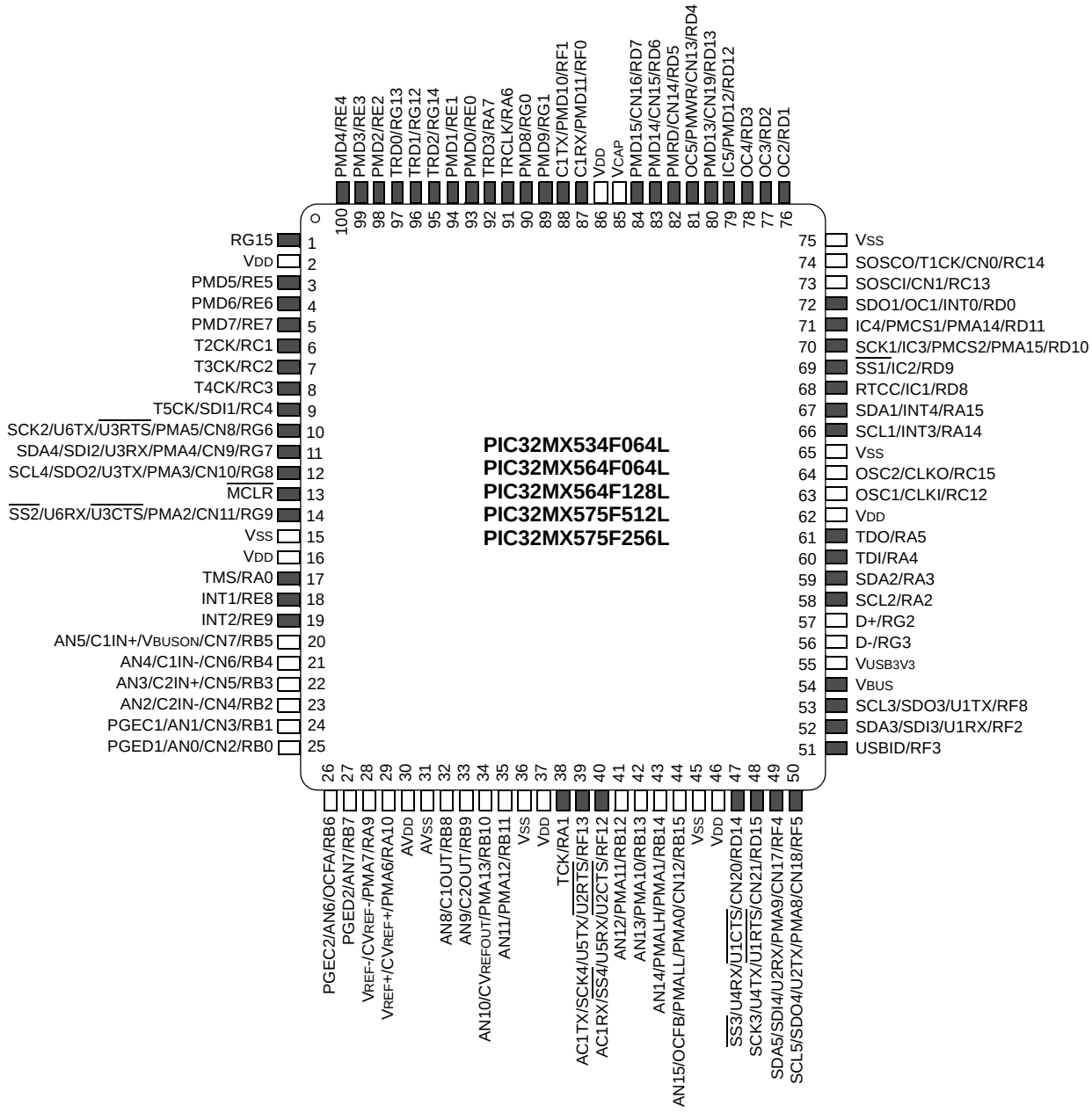

Pin Diagrams (Continued)

100-Pin TQFP

= Pins are up to 5V tolerant

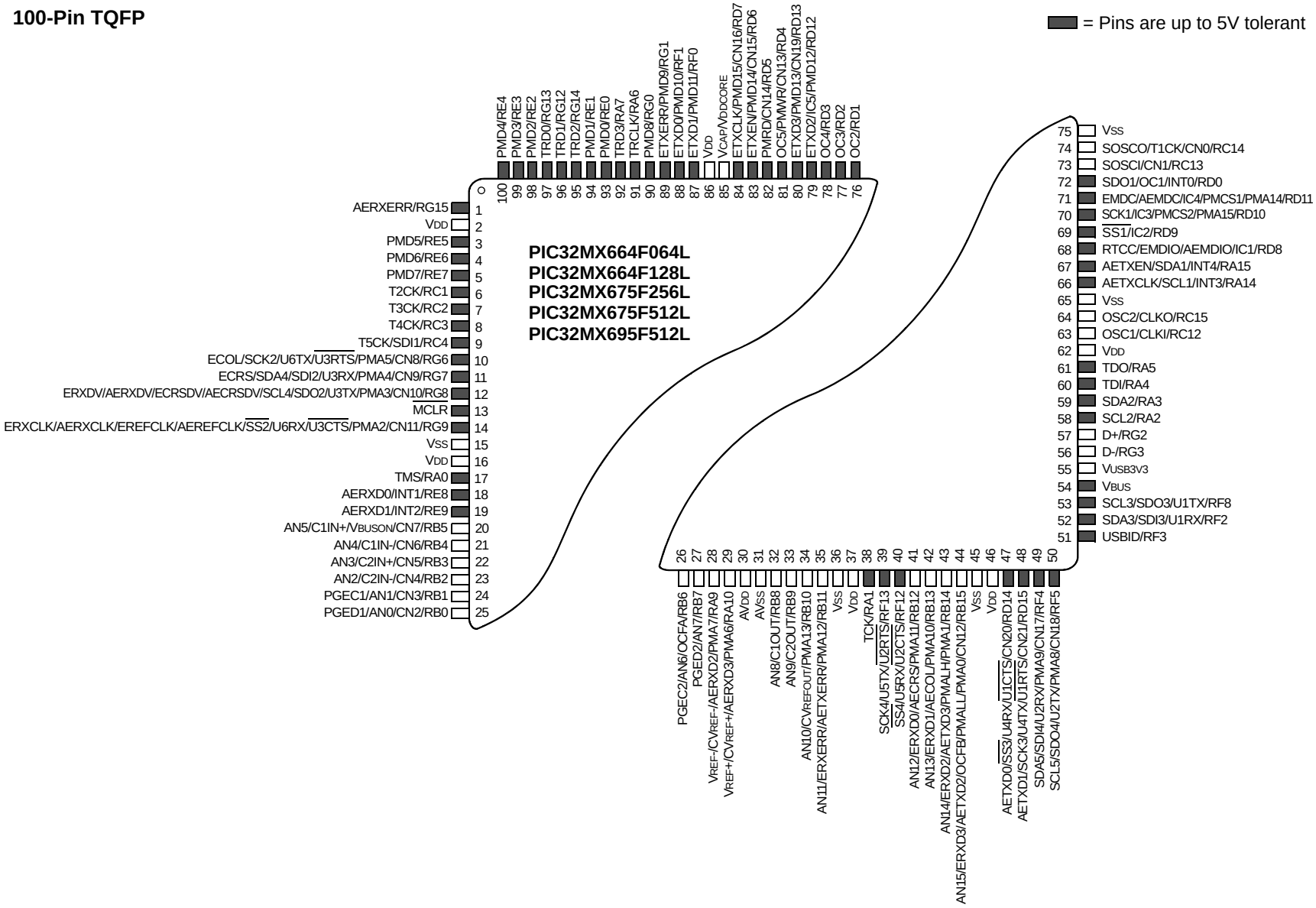

© 2009-2013 Microchip Technology Inc.

Pin Diagrams (Continued)

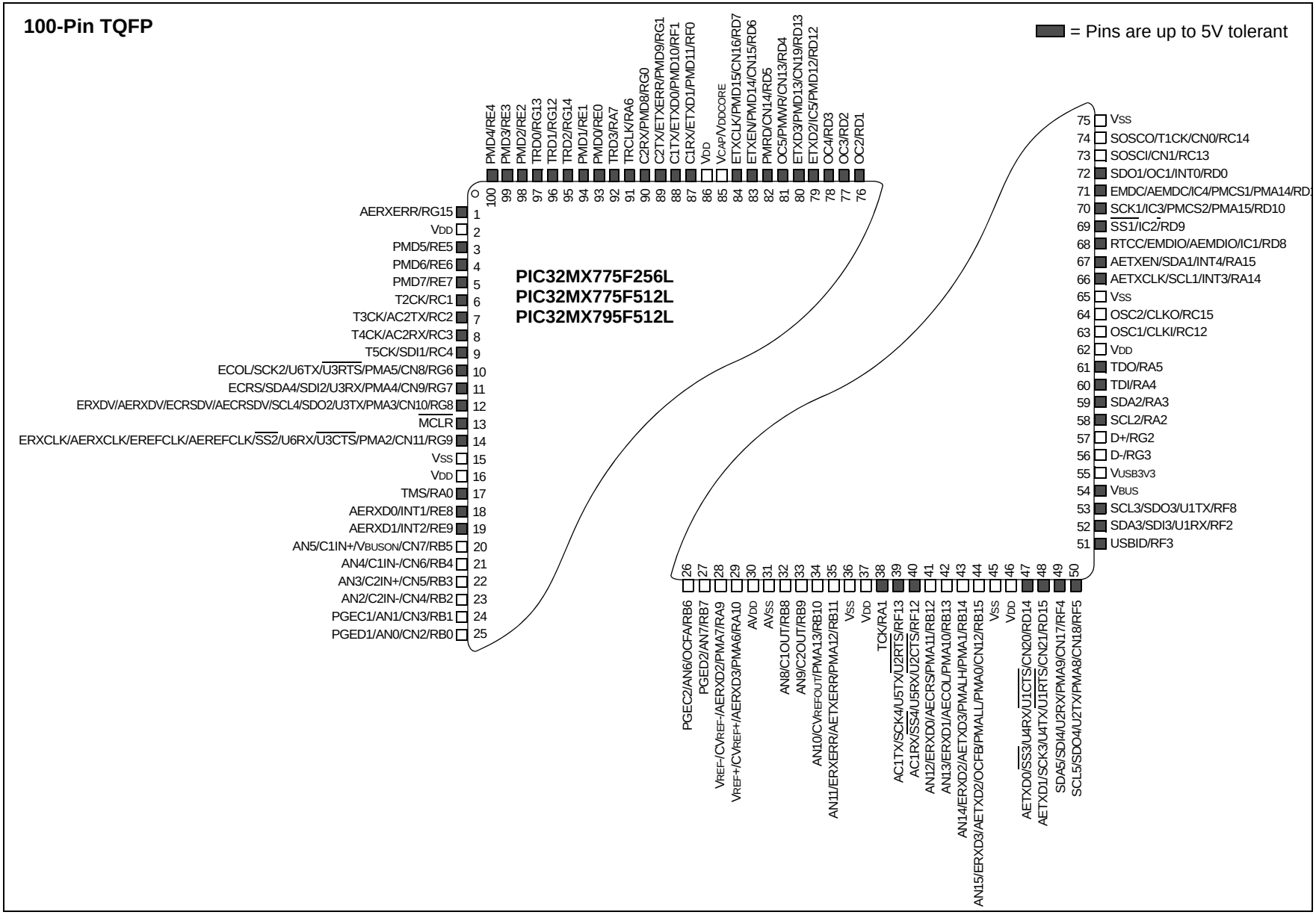

© 2009-2013 Microchip Technology Inc.

Pin Diagrams (Continued)

100-Pin TQFP

= Pins are up to 5V tolerant

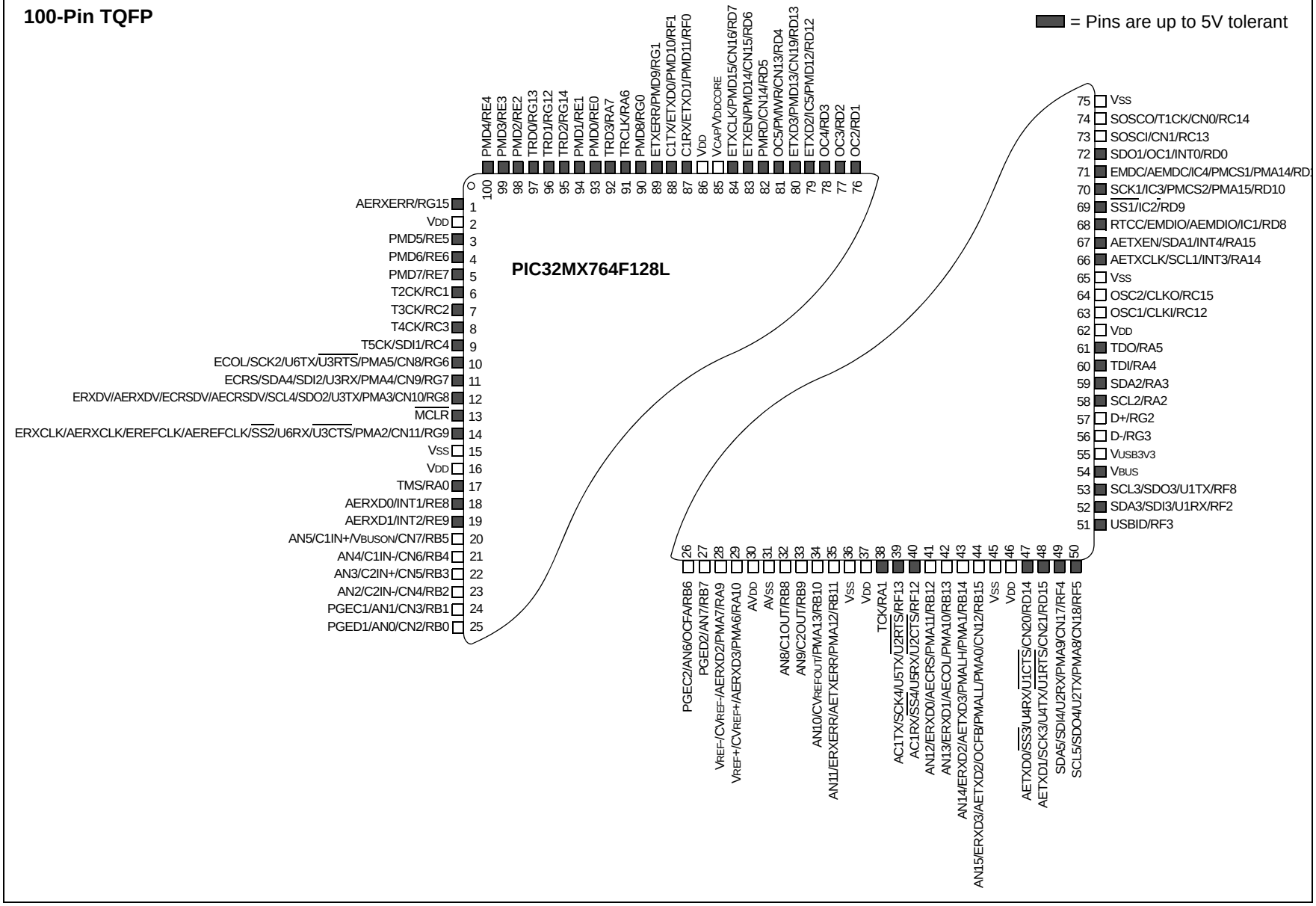

© 2009-2013 Microchip Technology Inc.

Pin Diagrams (Continued)

121-Pin TFBGA(1)

● = Pins are up to 5V tolerant

PIC32MX534F064L
PIC32MX564F064L
PIC32MX664F064L
PIC32MX564F128L
PIC32MX664F128L
PIC32MX764F128L
PIC32MX575F256L
PIC32MX675F256L
PIC32MX775F256L
PIC32MX575F512L
PIC32MX675F512L
PIC32MX695F512L
PIC32MX775F512L
PIC32MX795F512L

	1	2	3	4	5	6	7	8	9	10	11
A	RE4	RE3	RG13	RE0	RG0	RF1	VDD	VSS	RD12	RD2	RD1
B	NC	RG15	RE2	RE1	RA7	RF0	VCAP	RD5	RD3	VSS	RC14
C	RE6	VDD	RG12	RG14	RA6	NC	RD7	RD4	VDD	RC13	RD11
D	RC1	RE7	RE5	VSS	VSS	NC	RD6	RD13	RD0	NC	RD10
E	RC4	RC3	RG6	RC2	VDD	RG1	VSS	RA15	RD8	RD9	RA14
F	$\overline{\text{MCLR}}$	RG8	RG9	RG7	VSS	NC	NC	VDD	RC12	VSS	RC15
G	RE8	RE9	RA0	NC	VDD	VSS	VSS	NC	RA5	RA3	RA4
H	RB5	RB4	VSS	VDD	NC	VDD	NC	VBUS	VUSB3V3	RG2	RA2
J	RB3	RB2	RB7	AVDD	RB11	RA1	RB12	NC	NC	RF8	RG3
K	RB1	RB0	RA10	RB8	NC	RF12	RB14	VDD	RD15	RF3	RF2
L	RB6	RA9	AVSS	RB9	RB10	RF13	RB13	RB15	RD14	RF4	RF5

Note 1: Refer to Table 4, Table 5 and Table 6 for full pin names.

TABLE 4: PIN NAMES: PIC32MX534F064L, PIC32MX564F064L, PIC32MX564F128L, PIC32MX575F256L AND PIC32MX575F512L DEVICES

Pin Number	Full Pin Name
A1	PMD4/RE4
A2	PMD3/RE3
A3	TRD0/RG13
A4	PMD0/RE0
A5	PMD8/RG0
A6	C1TX/PMD10/RF1
A7	VDD
A8	VSS
A9	IC5/PMD12/RD12
A10	OC3/RD2
A11	OC2/RD1
B1	No Connect (NC)
B2	RG15
B3	PMD2/RE2
B4	PMD1/RE1
B5	TRD3/RA7
B6	C1RX/PMD11/RF0
B7	VCAP
B8	PMRD/CN14/RD5
B9	OC4/RD3
B10	VSS
B11	SOSCO/T1CK/CN0/RC14
C1	PMD6/RE6
C2	VDD
C3	TRD1/RG12
C4	TRD2/RG14
C5	TRCLK/RA6
C6	No Connect (NC)
C7	PMD15/CN16/RD7
C8	OC5/PMWR/CN13/RD4
C9	VDD
C10	SOSCI/CN1/RC13
C11	IC4/PMCS1/PMA14/RD11
D1	T2CK/RC1
D2	PMD7/RE7
D3	PMD5/RE5
D4	VSS
D5	VSS
D6	No Connect (NC)
D7	PMD14/CN15/RD6
D8	PMD13/CN19/RD13
D9	SDO1/OC1/INT0/RD0
D10	No Connect (NC)
D11	SCK1/IC3/PMCS2/PMA15/RD10
E1	T5CK/SDI1/RC4
E2	T4CK/RC3
E3	SCK2/U6TXU6TX/$\overline{\text{U3RTS}}$/PMA5/CN8/RG6
E4	T3CK/RC2
E5	VDD
E6	PMD9/RG1
E7	VSS
E8	SDA1/INT4/RA15
E9	RTCC/IC1/RD8
E10	$\overline{\text{SS1}}$/IC2/RD9
E11	SCL1/INT3/RA14
F1	$\overline{\text{MCLR}}$
F2	SCL4/SDO2/U3TX/PMA3/CN10/RG8
F3	$\overline{\text{SS2}}$/U6RX/$\overline{\text{U3CTS}}$/PMA2/CN11/RG9
F4	SDA4/SDI2/U3RX/PMA4/CN9/RG7
F5	VSS
F6	No Connect (NC)
F7	No Connect (NC)
F8	VDD
F9	OSC1/CLKI/RC12
F10	VSS
F11	OSC2/CLKO/RC15
G1	INT1/RE8
G2	INT2/RE9
G3	TMS/RA0
G4	No Connect (NC)
G5	VDD
G6	VSS
G7	VSS
G8	No Connect (NC)
G9	TDO/RA5
G10	SDA2/RA3
G11	TDI/RA4
H1	AN5/C1IN+/VBUSON/CN7/RB5
H2	AN4/C1IN-/CN6/RB4
H3	VSS
H4	VDD
H5	No Connect (NC)
H6	VDD
H7	No Connect (NC)
H8	VBUS
H9	VUSB3V3
H10	D+/RG2
H11	SCL2/RA2
J1	AN3/C2IN+/CN5/RB3
J2	AN2/C2IN-/CN4/RB2
J3	PGED2/AN7/RB7
J4	AVDD
J5	AN11/PMA12/RB11
J6	TCK/RA1
J7	AN12/PMA11/RB12
J8	No Connect (NC)
J9	No Connect (NC)
J10	SCL3/SDO3/U1TX/RF8
J11	D-/RG3
K1	PGEC1/AN1/CN3/RB1
K2	PGED1/AN0/CN2/RB0
K3	VREF+/CVREF+/PMA6/RA10

© 2009-2013 Microchip Technology Inc.

TABLE 4: PIN NAMES: PIC32MX534F064L, PIC32MX564F064L, PIC32MX564F128L, PIC32MX575F256L AND PIC32MX575F512L DEVICES (CONTINUED)

Pin Number	Full Pin Name
K4	AN8/C1OUT/RB8
K5	No Connect (NC)
K6	AC1RX/$\overline{\text{SS4}}$/U5RX/$\overline{\text{U2CTS}}$/RF12
K7	AN14/PMALH/PMA1/RB14
K8	VDD
K9	SCK3/U4TX/$\overline{\text{U1RTS}}$/CN21/RD15
K10	USBID/RF3
K11	SDA3/SDI3/U1RX/RF2
L1	PGEC2/AN6/OCFA/RB6
L2	VREF-/CVREF-/PMA7/RA9

Pin Number	Full Pin Name
L3	AVSS
L4	AN9/C2OUT/RB9
L5	AN10/CVREFOUT/PMA13/RB10
L6	AC1TX/SCK4/U5TX/$\overline{\text{U2RTS}}$/RF13
L7	AN13/PMA10/RB13
L8	AN15/OCFB/PMALL/PMA0/CN12/RB15
L9	$\overline{\text{SS3}}$/U4RX/$\overline{\text{U1CTS}}$/CN20/RD14
L10	SDA5/SDI4/U2RX/PMA9/CN17/RF4
L11	SCL5/SDO4/U2TX/PMA8/CN18/RF5

TABLE 5: PIN NAMES: PIC32MX664F064L, PIC32MX664F128L, PIC32MX675F256L, PIC32MX675F512L AND PIC32MX695F512L DEVICES

Pin Number	Full Pin Name
A1	PMD4/RE4
A2	PMD3/RE3
A3	TRD0/RG13
A4	PMD0/RE0
A5	PMD8/RG0
A6	ETXD0/PMD10/RF1
A7	VDD
A8	VSS
A9	ETXD2/IC5/PMD12/RD12
A10	OC3/RD2
A11	OC2/RD1
B1	No Connect (NC)
B2	AERXERR/RG15
B3	PMD2/RE2
B4	PMD1/RE1
B5	TRD3/RA7
B6	ETXD1/PMD11/RF0
B7	VCAP
B8	PMRD/CN14/RD5
B9	OC4/RD3
B10	VSS
B11	SOSCO/T1CK/CN0/RC14
C1	PMD6/RE6
C2	VDD
C3	TRD1/RG12
C4	TRD2/RG14
C5	TRCLK/RA6
C6	No Connect (NC)
C7	ETXCLK/PMD15/CN16/RD7
C8	OC5/PMWR/CN13/RD4
C9	VDD
C10	SOSCI/CN1/RC13
C11	EMDC/AEMDC/IC4/PMCS1/PMA14/RD11
D1	T2CK/RC1
D2	PMD7/RE7
D3	PMD5/RE5
D4	VSS
D5	VSS
D6	No Connect (NC)
D7	ETXEN/PMD14/CN15/RD6
D8	ETXD3/PMD13/CN19/RD13
D9	SDO1/OC1/INT0/RD0
D10	No Connect (NC)
D11	SCK1/IC3/PMCS2/PMA15/RD10
E1	T5CK/SDI1/RC4
E2	T4CK/RC3
E3	ECOL/SCK2/U6TX/$\overline{\text{U3RTS}}$/PMA5/CN8/RG6
E4	T3CK/RC2
E5	VDD
E6	ETXERR/PMD9/RG1
E7	VSS

Pin Number	Full Pin Name
E8	AETXEN/SDA1/INT4/RA15
E9	RTCC/EMDIO/AEMDIO/IC1/RD8
E10	$\overline{\text{SS1}}$/IC2/RD9
E11	AETXCLK/SCL1/INT3/RA14
F1	$\overline{\text{MCLR}}$
F2	ERXDV/AERXDV/ECRSDV/AECRSDV//SCL4/SDO2/ U3TX/PMA3/CN10/RG8
F3	ERXCLK/AERXCLK/EREFCLK/AEREFCLK/$\overline{\text{SS2}}$/U6RX/ U3CTS/PMA2/CN11/RG9
F4	ECRS/SDA4/SDI2/U3RX/PMA4/CN9/RG7
F5	VSS
F6	No Connect (NC)
F7	No Connect (NC)
F8	VDD
F9	OSC1/CLKI/RC12
F10	VSS
F11	OSC2/CLKO/RC15
G1	AERXD0/INT1/RE8
G2	AERXD1/INT2/RE9
G3	TMS/RA0
G4	No Connect (NC)
G5	VDD
G6	VSS
G7	VSS
G8	No Connect (NC)
G9	TDO/RA5
G10	SDA2/RA3
G11	TDI/RA4
H1	AN5/C1IN+/VBUSON/CN7/RB5
H2	AN4/C1IN-/CN6/RB4
H3	VSS
H4	VDD
H5	No Connect (NC)
H6	VDD
H7	No Connect (NC)
H8	VBUS
H9	VUSB3V3
H10	D+/RG2
H11	SCL2/RA2
J1	AN3/C2IN+/CN5/RB3
J2	AN2/C2IN-/CN4/RB2
J3	PGED2/AN7/RB7
J4	AVDD
J5	AN11/ERXERR/AETXERR/PMA12/RB11
J6	TCK/RA1
J7	AN12/ERXD0/AECRS/PMA11/RB12
J8	No Connect (NC)
J9	No Connect (NC)
J10	SCL3/SDO3/U1TX/RF8
J11	D-/RG3
K1	PGEC1/AN1/CN3/RB1
K2	PGED1/AN0/CN2/RB0
K3	VREF+/CVREF+/AERXD3/PMA6/RA10

© 2009-2013 Microchip Technology Inc.

TABLE 5: PIN NAMES: PIC32MX664F064L, PIC32MX664F128L, PIC32MX675F256L, PIC32MX675F512L AND PIC32MX695F512L DEVICES (CONTINUED)

Pin Number	Full Pin Name
K4	AN8/C1OUT/RB8
K5	No Connect (NC)
K6	$\overline{SS4}$/U5RX/$\overline{U2CTS}$/RF12
K7	AN14/ERXD2/AETXD3/PMALH/PMA1/RB14
K8	VDD
K9	AETXD1/SCK3/U4TX/$\overline{U1RTS}$/CN21/RD15
K10	USBID/RF3
K11	SDA3/SDI3/U1RX/RF2
L1	PGEC2/AN6/OCFA/RB6
L2	VREF-/CVREF-/AERXD2/PMA7/RA9

Pin Number	Full Pin Name
L3	AVSS
L4	AN9/C2OUT/RB9
L5	AN10/CVREFOUT/PMA13/RB10
L6	SCK4/U5TX/$\overline{U2RTS}$/RF13
L7	AN13/ERXD1/AECOL/PMA10/RB13
L8	AN15/ERXD3/AETXD2/OCFB/PMALL/PMA0/CN12/RB15
L9	AETXD0/$\overline{SS3}$/U4RX/$\overline{U1CTS}$/CN20/RD14
L10	SDA5/SDI4/U2RX/PMA9/CN17/RF4
L11	SCL5/SDO4/U2TX/PMA8/CN18/RF5

TABLE 6: PIN NAMES: PIC32MX775F256L, PIC32MX775F512L AND PIC32MX795F512L DEVICES

Pin Number	Full Pin Name
A1	PMD4/RE4
A2	PMD3/RE3
A3	TRD0/RG13
A4	PMD0/RE0
A5	C2RX/PMD8/RG0
A6	C1TX/ETXD0/PMD10/RF1
A7	VDD
A8	VSS
A9	ETXD2/IC5/PMD12/RD12
A10	OC3/RD2
A11	OC2/RD1
B1	No Connect (NC)
B2	AERXERR/RG15
B3	PMD2/RE2
B4	PMD1/RE1
B5	TRD3/RA7
B6	C1RX/ETXD1/PMD11/RF0
B7	VCAP
B8	PMRD/CN14/RD5
B9	OC4/RD3
B10	VSS
B11	SOSCO/T1CK/CN0/RC14
C1	PMD6/RE6
C2	VDD
C3	TRD1/RG12
C4	TRD2/RG14
C5	TRCLK/RA6
C6	No Connect (NC)
C7	ETXCLK/PMD15/CN16/RD7
C8	OC5/PMWR/CN13/RD4
C9	VDD
C10	SOSCI/CN1/RC13
C11	EMDC/AEMDC/IC4/PMCS1/PMA14/RD11
D1	T2CK/RC1
D2	PMD7/RE7
D3	PMD5/RE5
D4	VSS
D5	VSS
D6	No Connect (NC)
D7	ETXEN/PMD14/CN15/RD6
D8	ETXD3/PMD13/CN19/RD13
D9	SDO1/OC1/INT0/RD0
D10	No Connect (NC)
D11	SCK1/IC3/PMCS2/PMA15/RD10
E1	T5CK/SDI1/RC4
E2	T4CK/AC2RX/RC3
E3	ECOL/SCK2/U6TX/$\overline{\text{U3RTS}}$/PMA5/CN8/RG6
E4	T3CK/AC2TX/RC2
E5	VDD
E6	C2TX/ETXERR/PMD9/RG1
E7	VSS

Pin Number	Full Pin Name
E8	AETXEN/SDA1/INT4/RA15
E9	RTCC/EMDIO/AEMDIO/IC1/RD8
E10	$\overline{\text{SS1}}$/IC2/RD9
E11	AETXCLK/SCL1/INT3/RA14
F1	$\overline{\text{MCLR}}$
F2	ERXDV/AERXDV/ECRSDV/AECRSDV/SCL4/SDO2/U3TX/PMA3/CN10/RG8
F3	$\overline{\text{ERXCL}}$K/AERXCLK/EREFCLK/AEREFCLK/$\overline{\text{SS2}}$/U6RX/$\overline{\text{U3CTS}}$/PMA2/CN11/RG9
F4	ECRS/SDA4/SDI2/U3RX/PMA4/CN9/RG7
F5	VSS
F6	No Connect (NC)
F7	No Connect (NC)
F8	VDD
F9	OSC1/CLKI/RC12
F10	VSS
F11	OSC2/CLKO/RC15
G1	AERXD0/INT1/RE8
G2	AERXD1/INT2/RE9
G3	TMS/RA0
G4	No Connect (NC)
G5	VDD
G6	VSS
G7	VSS
G8	No Connect (NC)
G9	TDO/RA5
G10	SDA2/RA3
G11	TDI/RA4
H1	AN5/C1IN+/VBUSON/CN7/RB5
H2	AN4/C1IN-/CN6/RB4
H3	VSS
H4	VDD
H5	No Connect (NC)
H6	VDD
H7	No Connect (NC)
H8	VBUS
H9	VUSB3V3
H10	D+/RG2
H11	SCL2/RA2
J1	AN3/C2IN+/CN5/RB3
J2	AN2/C2IN-/CN4/RB2
J3	PGED2/AN7/RB7
J4	AVDD
J5	AN11/ERXERR/AETXERR/PMA12/RB11
J6	TCK/RA1
J7	AN12/ERXD0/AECRS/PMA11/RB12
J8	No Connect (NC)
J9	No Connect (NC)
J10	SCL3/SDO3/U1TX/RF8
J11	D-/RG3
K1	PGEC1/AN1/CN3/RB1
K2	PGED1/AN0/CN2/RB0
K3	VREF+/CVREF+/AERXD3/PMA6/RA10

© 2009-2013 Microchip Technology Inc.

TABLE 6: PIN NAMES: PIC32MX775F256L, PIC32MX775F512L AND PIC32MX795F512L DEVICES (CONTINUED)

Pin Number	Full Pin Name
K4	AN8/C1OUT/RB8
K5	No Connect (NC)
K6	AC1RX/$\overline{\text{SS4}}$/U5RX/$\overline{\text{U2CTS}}$/RF12
K7	AN14/ERXD2/AETXD3/PMALH/PMA1/RB14
K8	VDD
K9	AETXD1/SCK3/U4TX/$\overline{\text{U1RTS}}$/CN21/RD15
K10	USBID/RF3
K11	SDA3/SDI3/U1RX/RF2
L1	PGEC2/AN6/OCFA/RB6
L2	VREF-/CVREF-/AERXD2/PMA7/RA9

Pin Number	Full Pin Name
L3	AVSS
L4	AN9/C2OUT/RB9
L5	AN10/CVREFOUT/PMA13/RB10
L6	AC1TX/SCK4/U5TX/$\overline{\text{U2RTS}}$/RF13
L7	AN13/ERXD1/AECOL/PMA10/RB13
L8	AN15/ERXD3/AETXD2/OCFB/PMALL/PMA0/CN12/RB15
L9	AETXD0/$\overline{\text{SS3}}$/U4RX/$\overline{\text{U1CTS}}$/CN20/RD14
L10	SDA5/SDI4/U2RX/PMA9/CN17/RF4
L11	SCL5/SDO4/U2TX/PMA8/CN18/RF5

TABLE 7: PIN NAME: PIC32MX764F128L DEVICE

Pin Number	Full Pin Name
A1	PMD4/RE4
A2	PMD3/RE3
A3	TRD0/RG13
A4	PMD0/RE0
A5	PMD8/RG0
A6	C1TX/ETXD0/PMD10/RF1
A7	VDD
A8	VSS
A9	ETXD2/IC5/PMD12/RD12
A10	OC3/RD2
A11	OC2/RD1
B1	No Connect (NC)
B2	AERXERR/RG15
B3	PMD2/RE2
B4	PMD1/RE1
B5	TRD3/RA7
B6	C1RX/ETXD1/PMD11/RF0
B7	VCAP
B8	PMRD/CN14/RD5
B9	OC4/RD3
B10	VSS
B11	SOSCO/T1CK/CN0/RC14
C1	PMD6/RE6
C2	VDD
C3	TRD1/RG12
C4	TRD2/RG14
C5	TRCLK/RA6
C6	No Connect (NC)
C7	ETXCLK/PMD15/CN16/RD7
C8	OC5/PMWR/CN13/RD4
C9	VDD
C10	SOSCI/CN1/RC13
C11	EMDC/AEMDC/IC4/PMCS1/PMA14/RD11
D1	T2CK/RC1
D2	PMD7/RE7
D3	PMD5/RE5
D4	VSS
D5	VSS
D6	No Connect (NC)
D7	ETXEN/PMD14/CN15/RD6
D8	ETXD3/PMD13/CN19/RD13
D9	SDO1/OC1/INT0/RD0
D10	No Connect (NC)
D11	SCK1/IC3/PMCS2/PMA15/RD10
E1	T5CK/SDI1/RC4
E2	T4CK/RC3
E3	ECOL/SCK2/U6TX/$\overline{\text{U3RTS}}$/PMA5/CN8/RG6
E4	T3CK/RC2
E5	VDD
E6	ETXERR/PMD9/RG1
E7	VSS
E8	AETXEN/SDA1/INT4/RA15
E9	RTCC/EMDIO/AEMDIO/IC1/RD8
E10	$\overline{\text{SS1}}$/IC2/RD9
E11	AETXCLK/SCL1/INT3/RA14
F1	$\overline{\text{MCLR}}$
F2	ERXDV/AERXDV/ECRSDV/AECRSDV/SCL4/SDO2/ U3TX/PMA3/CN10/RG8
F3	$\overline{\text{ERXCL}}$K/AERXCLK/EREFCLK/AEREFCLK/$\overline{\text{SS2}}$/U6RX/ U3CTS/PMA2/CN11/RG9
F4	ECRS/SDA4/SDI2/U3RX/PMA4/CN9/RG7
F5	VSS
F6	No Connect (NC)
F7	No Connect (NC)
F8	VDD
F9	OSC1/CLKI/RC12
F10	VSS
F11	OSC2/CLKO/RC15
G1	AERXD0/INT1/RE8
G2	AERXD1/INT2/RE9
G3	TMS/RA0
G4	No Connect (NC)
G5	VDD
G6	VSS
G7	VSS
G8	No Connect (NC)
G9	TDO/RA5
G10	SDA2/RA3
G11	TDI/RA4
H1	AN5/C1IN+/VBUSON/CN7/RB5
H2	AN4/C1IN-/CN6/RB4
H3	VSS
H4	VDD
H5	No Connect (NC)
H6	VDD
H7	No Connect (NC)
H8	VBUS
H9	VUSB3V3
H10	D+/RG2
H11	SCL2/RA2
J1	AN3/C2IN+/CN5/RB3
J2	AN2/C2IN-/CN4/RB2
J3	PGED2/AN7/RB7
J4	AVDD
J5	AN11/ERXERR/AETXERR/PMA12/RB11
J6	TCK/RA1
J7	AN12/ERXD0/AECRS/PMA11/RB12
J8	No Connect (NC)
J9	No Connect (NC)
J10	SCL3/SDO3/U1TX/RF8
J11	D-/RG3
K1	PGEC1/AN1/CN3/RB1
K2	PGED1/AN0/CN2/RB0
K3	VREF+/CVREF+/AERXD3/PMA6/RA10

© 2009-2013 Microchip Technology Inc.

TABLE 7: PIN NAME: PIC32MX764F128L DEVICE (CONTINUED)

Pin Number	Full Pin Name
K4	AN8/C1OUT/RB8
K5	No Connect (NC)
K6	AC1RX/$\overline{\text{SS4}}$/U5RX/$\overline{\text{U2CTS}}$/RF12
K7	AN14/ERXD2/AETXD3/PMALH/PMA1/RB14
K8	VDD
K9	AETXD1/SCK3/U4TX/$\overline{\text{U1RTS}}$/CN21/RD15
K10	USBID/RF3
K11	SDA3/SDI3/U1RX/RF2
L1	PGEC2/AN6/OCFA/RB6
L2	VREF-/CVREF-/AERXD2/PMA7/RA9
L3	AVSS
L4	AN9/C2OUT/RB9
L5	AN10/CVREFOUT/PMA13/RB10
L6	AC1TX/SCK4/U5TX/$\overline{\text{U2RTS}}$/RF13
L7	AN13/ERXD1/AECOL/PMA10/RB13
L8	AN15/ERXD3/AETXD2/OCFB/PMALL/PMA0/CN12/RB15
L9	AETXD0/$\overline{\text{SS3}}$/U4RX/$\overline{\text{U1CTS}}$/CN20/RD14
L10	SDA5/SDI4/U2RX/PMA9/CN17/RF4
L11	SCL5/SDO4/U2TX/PMA8/CN18/RF5

Pin Diagrams (Continued)

124-Pin VTLA(1)

= Pins are up to 5V tolerant

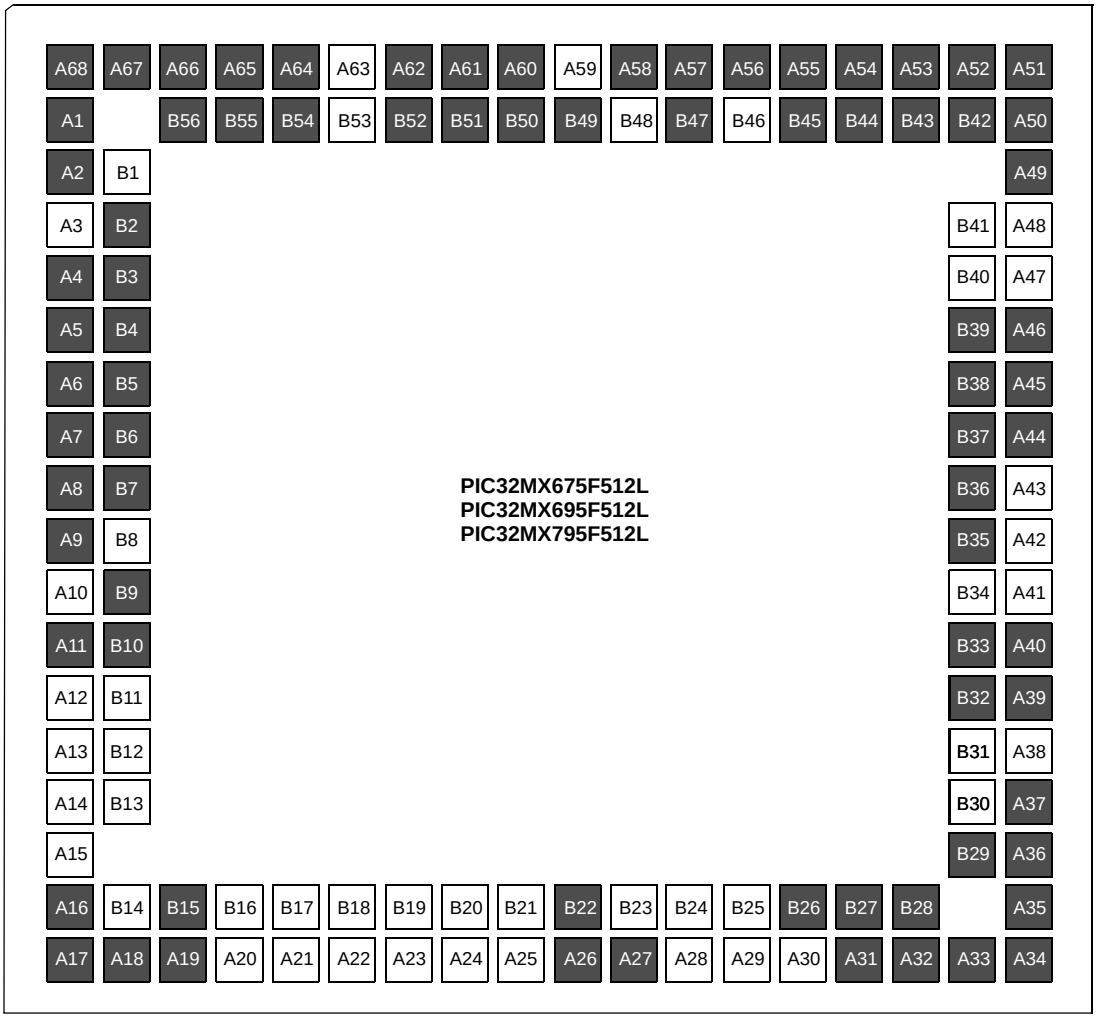

Note 1: Refer to Table 8 for the full list of pin names.

© 2009-2013 Microchip Technology Inc.

TABLE 8: PIN NAMES: PIC32MX675F512L, PIC32MX695F512L, AND PIC32MX795F512L DEVICES

Package Bump #	Full Pin Name
A1	No Connect (NC)
A2	AERXERR/RG15
A3	VSS
A4	PMD6/RE6
A5	T2CK/RC1
A6	T4CK/AC2RX(1)/RC3
A7	ECOL/SCK2/U6TX/$\overline{\text{U3RTS}}$/PMA5/CN8/RG6
A8	ERXDV/AERXDV/ECRSDV/AECRSDV/SCL4/SDO2/ U3TX/PMA3/CN10/RG8
A9	ERXCLK/AERXCLK/EREFCLK/AEREFCLK/$\overline{\text{SS2}}$/U6RX/ U3CTS/PMA2/CN11/RG9
A10	VDD
A11	AERXD0/INT1/RE8
A12	AN5/C1IN+/VBUSON/CN7/RB5
A13	AN3/C2IN+/CN5/RB3
A14	VDD
A15	PGEC1/AN1/CN3/RB1
A16	No Connect (NC)
A17	No Connect (NC)
A18	No Connect (NC)
A19	No Connect (NC)
A20	PGEC2/AN6/OCFA/RB6
A21	VREF-/CVREF-/AERXD2/PMA7/RA9
A22	AVDD
A23	AN8/C1OUT/RB8
A24	AN10/CVREFOUT/PMA13/RB10
A25	VSS
A26	TCK/RA1
A27	AC1RX(1)/$\overline{\text{SS4}}$/U5RX/$\overline{\text{U2CTS}}$/RF12
A28	AN13/ERXD1/AECOL/PMA10/RB13
A29	AN15/ERXD3/AETXD2/OCFB/PMALL/PMA0/CN12/RB15
A30	VDD
A31	AETXD1/SCK3/U4TX/$\overline{\text{U1RTS}}$/CN21/RD15
A32	SCL5/SDO4/U2TX/PMA8/CN18/RF5
A33	No Connect (NC)
A34	No Connect (NC)
A35	USBID/RF3
A36	SDA3/SDI3/U1RX/RF2
A37	VBUS
A38	D-/RG3
A39	SCL2/RA2
A40	TDI/RA4
A41	VDD
A42	OSC2/CLKO/RC15
A43	VSS
A44	AETXEN/SDA1/INT4/RA15
A45	$\overline{\text{SS1}}$/IC2/RD9
A46	EMDC/AEMDC/IC4/PMCS1/PMA14/RD11
A47	SOSCI/CN1/RC13
A48	VDD
A49	No Connect (NC)
A50	No Connect (NC)
A51	No Connect (NC)
A52	OC2/RD1
A53	OC4/RD3
A54	ETXD3/PMD13/CN19/RD13
A55	PMRD/CN14/RD5
A56	ETXCLK/PMD15/CN16/RD7
A57	No Connect (NC)
A58	No Connect (NC)
A59	VDD
A60	C1TX(1)/ETXD0/PMD10/RF1
A61	C2RX(1)/PMD8/RG0
A62	TRD3/RA7
A63	VSS
A64	PMD1/RE1
A65	TRD1/RG12
A66	PMD2/RE2
A67	PMD4/RE4
A68	No Connect (NC)
B1	VDD
B2	PMD5/RE5
B3	PMD7/RE7
B4	T3CK/AC2TX/RC2
B5	T5CK/SDI1/RC4
B6	ECRS/SDA4/SDI2/U3RX/PMA4/CN9/RG7
B7	$\overline{\text{MCLR}}$
B8	VSS
B9	TMS/RA0
B10	AERXD1/INT2/RE9
B11	AN4/C1IN-/CN6/RB4
B12	VSS
B13	AN2/C2IN-/CN4/RB2
B14	PGED1/AN0/CN2/RB0
B15	No Connect (NC)
B16	PGED2/AN7/RB7
B17	VREF+/CVREF+/AERXD3/PMA6/RA10
B18	AVSS
B19	AN9/C2OUT/RB9
B20	AN11/ERXERR/AETXERR/PMA12/RB11
B21	VDD
B22	AC1TX(1)/SCK4/U5TX/$\overline{\text{U2RTS}}$/RF13
B23	AN12/ERXD0/AECRS/PMA11/RB12
B24	AN14/ERXD2/AETXD3/PMALH/PMA1/RB14
B25	VSS
B26	AETXD0/$\overline{\text{SS3}}$/U4RX/$\overline{\text{U1CTS}}$/CN20/RD14
B27	SDA5/SDI4/U2RX/PMA9/CN17/RF4
B28	No Connect (NC)
B29	SCL3/SDO3/U1TX/RF8
B30	VUSB3V3
B31	D+/RG2
B32	SDA2/RA3
B33	TDO/RA5
B34	OSC1/CLKI/RC12

Note 1: This pin is only available on PIC32MX795F512L devices.

TABLE 8: PIN NAMES: PIC32MX675F512L, PIC32MX695F512L, AND PIC32MX795F512L DEVICES

Package Bump #	Full Pin Name
B35	No Connect (NC)
B36	AETXCLK/SCL1/INT3/RA14
B37	RTCC/EMDIO/AEMDIO/IC1/RD8
B38	SCK1/IC3/PMCS2/PMA15/RD10
B39	SDO1/OC1/INT0/RD0
B40	SOSCO/T1CK/CN0/RC14
B41	VSS
B42	OC3/RD2
B43	ETXD2/IC5/PMD12/RD12
B44	OC5/PMWR/CN13/RD4
B45	ETXEN/PMD14/CN15/RD6
B46	VSS
B47	No Connect (NC)
B48	VCAP
B49	C1RX/ETXD1/PMD11/RF0
B50	C2TX/ETXERR/PMD9/RG1
B51	TRCLK/RA6
B52	PMD0/RE0
B53	VDD
B54	TRD2/RG14
B55	TRD0/RG13
B56	PMD3/RE3

Note 1: This pin is only available on PIC32MX795F512L devices.

© 2009-2013 Microchip Technology Inc.

Table of Contents

1.0 Device Overview 33
2.0 Guidelines for Getting Started with 32-bit MCUs 45
3.0 CPU 49
4.0 Memory Organization 55
5.0 Flash Program Memory 123
6.0 Resets 127
7.0 Interrupt Controller 131
8.0 Oscillator Configuration 141
9.0 Prefetch Cache 147
10.0 Direct Memory Access (DMA) Controller 157
11.0 USB On-The-Go (OTG) 173
12.0 I/O Ports 193
13.0 Timer1 197
14.0 Timer2/3, Timer4/5 201
15.0 Input Capture 205
16.0 Output Compare 209
17.0 Serial Peripheral Interface (SPI) 211
18.0 Inter-Integrated Circuit™ (I^2C™) 217
19.0 Universal Asynchronous Receiver Transmitter (UART) 223
20.0 Parallel Master Port (PMP) 229
21.0 Real-Time Clock and Calendar (RTCC) 237
22.0 10-bit Analog-to-Digital Converter (ADC) 247
23.0 Controller Area Network (CAN) 255
24.0 Ethernet Controller 289
25.0 Comparator 331
26.0 Comparator Voltage Reference (CVREF) 335
27.0 Power-Saving Features 337
28.0 Special Features 339
29.0 Instruction Set 353
30.0 Development Support 355
31.0 Electrical Characteristics 359
32.0 DC and AC Device Characteristics Graphs 407
33.0 Packaging Information 409
The Microchip Web Site 443
Customer Change Notification Service 443
Customer Support 443
Reader Response 444
Product Identification System 445

TO OUR VALUED CUSTOMERS

It is our intention to provide our valued customers with the best documentation possible to ensure successful use of your Microchip products. To this end, we will continue to improve our publications to better suit your needs. Our publications will be refined and enhanced as new volumes and updates are introduced.

If you have any questions or comments regarding this publication, please contact the Marketing Communications Department via E-mail at **docerrors@microchip.com** or fax the **Reader Response Form** in the back of this data sheet to (480) 792-4150. We welcome your feedback.

Most Current Data Sheet

To obtain the most up-to-date version of this data sheet, please register at our Worldwide Web site at:

http://www.microchip.com

You can determine the version of a data sheet by examining its literature number found on the bottom outside corner of any page. The last character of the literature number is the version number, (e.g., DS30000000A is version A of document DS30000000).

Errata

An errata sheet, describing minor operational differences from the data sheet and recommended workarounds, may exist for current devices. As device/documentation issues become known to us, we will publish an errata sheet. The errata will specify the revision of silicon and revision of document to which it applies.

To determine if an errata sheet exists for a particular device, please check with one of the following:

- Microchip's Worldwide Web site; http://www.microchip.com
- Your local Microchip sales office (see last page)

When contacting a sales office, please specify which device, revision of silicon and data sheet (include literature number) you are using.

Customer Notification System

Register on our web site at **www.microchip.com** to receive the most current information on all of our products.

© 2009-2013 Microchip Technology Inc.

Referenced Sources

This device data sheet is based on the following individual chapters of the *"PIC32 Family Reference Manual"*. These documents should be considered as the general reference for the operation of a particular module or device feature.

Note 1: To access the documents listed below, browse to the documentation section of the PIC32MX795F512L product page on the Microchip web site (www.microchip.com) or select a family reference manual section from the following list.

In addition to parameters, features, and other documentation, the resulting page provides links to the related family reference manual sections.

- **Section 1. "Introduction"** (DS60001127)
- **Section 2. "CPU"** (DS60001113)
- **Section 4. "Prefetch Cache"** (DS60001119)
- **Section 3. "Memory Organization"** (DS60001115)
- **Section 5. "Flash Program Memory"** (DS60001121)
- **Section 6. "Oscillator Configuration"** (DS60001112)
- **Section 7. "Resets"** (DS60001118)
- **Section 8. "Interrupt Controller"** (DS60001108)
- **Section 9. "Watchdog Timer and Power-up Timer** (DS60001114)
- **Section 10. "Power-Saving Features"** (DS60001130)
- **Section 12. "I/O Ports"** (DS60001120)
- **Section 13. "Parallel Master Port (PMP)"** (DS60001128)
- **Section 14. "Timers"** (DS60001105)
- **Section 15. "Input Capture"** (DS60001122)
- **Section 16. "Output Capture"** (DS60001111)
- **Section 17. "10-bit Analog-to-Digital Converter (ADC)"** (DS60001104)
- **Section 19. "Comparator"** (DS60001110)
- **Section 20. "Comparator Voltage Reference (CVREF)"** (DS60001109)
- **Section 21. "Universal Asynchronous Receiver Transmitter (UART)"** (DS60001107)
- **Section 23. "Serial Peripheral Interface (SPI)"** (DS60001106)
- **Section 24. "Inter-Integrated Circuit (I2C™)"** (DS60001116)
- **Section 27. "USB On-The-Go (OTG)"** (DS60001126)
- **Section 29. "Real-Time Clock and Calendar (RTCC)"** (DS60001125)
- **Section 31. "Direct Memory Access (DMA) Controller"** (DS60001117)
- **Section 32. "Configuration"** (DS60001124)
- **Section 33. "Programming and Diagnostics"** (DS60001129)
- **Section 34. "Controller Area Network (CAN)"** (DS60001154)
- **Section 35. "Ethernet Controller"** (DS60001155)

© 2009-2013 Microchip Technology Inc.

NOTES:

© 2009-2013 Microchip Technology Inc.

1.0 DEVICE OVERVIEW

Note 1: This data sheet summarizes the features of the PIC32MX5XX/6XX/7XX family of devices. It is not intended to be a comprehensive reference source. To complement the information in this data sheet, refer to the related section of the *"PIC32 Family Reference Manual"*, which is available from the Microchip web site (www.microchip.com/PIC32).

2: Some registers and associated bits described in this section may not be available on all devices. Refer to **Section 4.0 "Memory Organization"** in this data sheet for device-specific register and bit information.

This document contains device-specific information for PIC32MX5XX/6XX/7XX devices.

Figure 1-1 illustrates a general block diagram of the core and peripheral modules in the PIC32MX5XX/6XX/7XX family of devices.

Table 1-1 lists the functions of the various pins shown in the pinout diagrams.

FIGURE 1-1: BLOCK DIAGRAM(1,2)

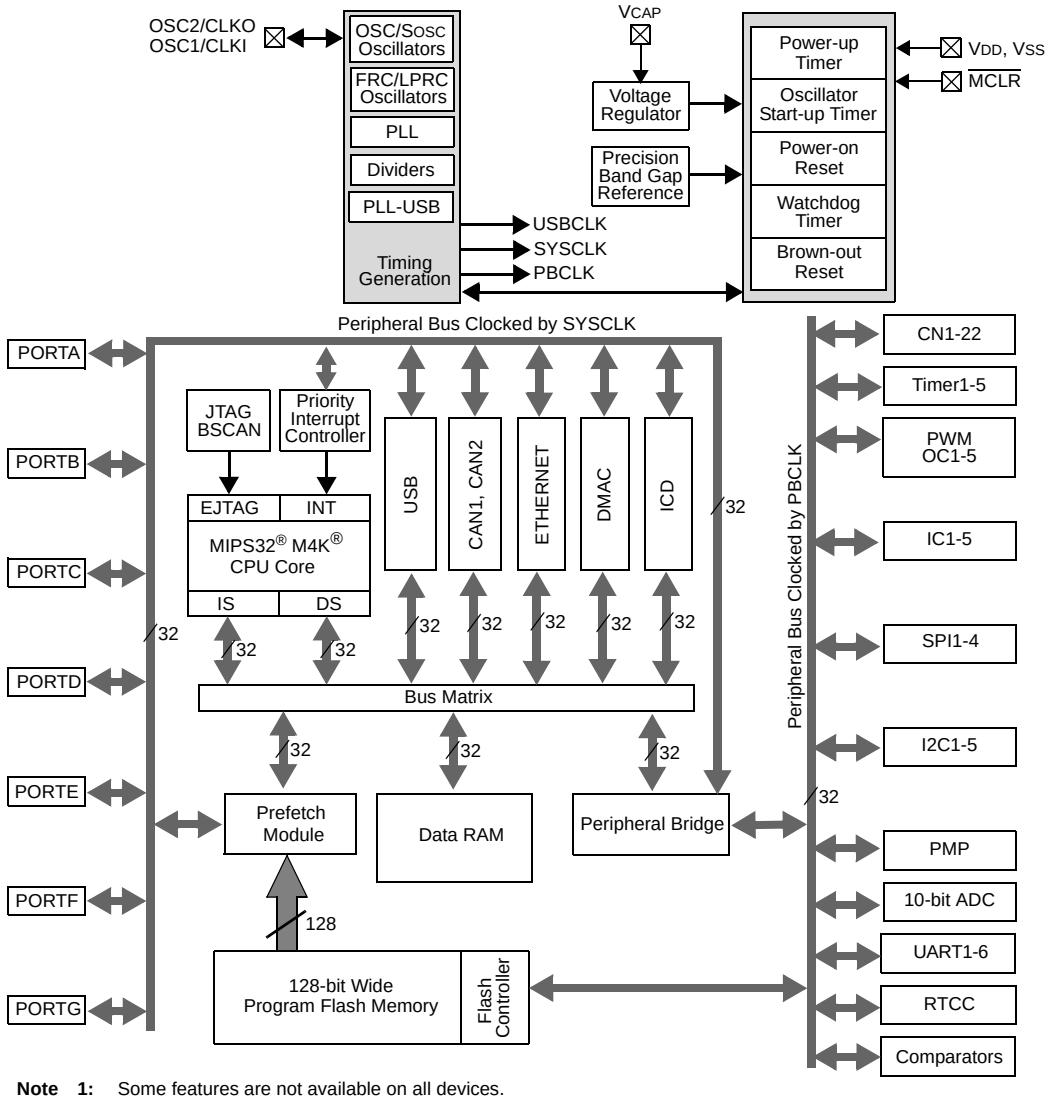

Note 1: Some features are not available on all devices.
2: BOR functionality is provided when the on-board voltage regulator is enabled.

TABLE 1-1: PINOUT I/O DESCRIPTIONS

Pin Name	Pin Number(1)				Pin Type	Buffer Type	Description
	64-Pin QFN/TQFP	100-Pin TQFP	121-Pin TFBGA	124-pin VTLA			
AN0	16	25	K2	B14	I	Analog	Analog input channels
AN1	15	24	K1	A15	I	Analog	
AN2	14	23	J2	B13	I	Analog	
AN3	13	22	J1	A13	I	Analog	
AN4	12	21	H2	B11	I	Analog	
AN5	11	20	H1	A12	I	Analog	
AN6	17	26	L1	A20	I	Analog	
AN7	18	27	J3	B16	I	Analog	
AN8	21	32	K4	A23	I	Analog	
AN9	22	33	L4	B19	I	Analog	
AN10	23	34	L5	A24	I	Analog	
AN11	24	35	J5	B20	I	Analog	
AN12	27	41	J7	B23	I	Analog	
AN13	28	42	L7	A28	I	Analog	
AN14	29	43	K7	B24	I	Analog	
AN15	30	44	L8	A29	I	Analog	
CLKI	39	63	F9	B34	I	ST/ CMOS	External clock source input. Always associated with OSC1 pin function.
CLKO	40	64	F11	A42	O	—	Oscillator crystal output. Connects to crystal or resonator in Crystal Oscillator mode. Optionally functions as CLKO in RC and EC modes. Always associated with OSC2 pin function.
OSC1	39	63	F9	B34	I	ST/ CMOS	Oscillator crystal input. ST buffer when configured in RC mode; CMOS otherwise.
OSC2	40	64	F11	A42	I/O	—	Oscillator crystal output. Connects to crystal or resonator in Crystal Oscillator mode. Optionally functions as CLKO in RC and EC modes.
SOSCI	47	73	C10	A47	I	ST/ CMOS	32.768 kHz low-power oscillator crystal input; CMOS otherwise
SOSCO	48	74	B11	B40	O	—	32.768 kHz low-power oscillator crystal output

Legend: CMOS = CMOS compatible input or output; ST = Schmitt Trigger input with CMOS levels; TTL = TTL input buffer; Analog = Analog input; O = Output; P = Power; I = Input

Note 1: Pin numbers are only provided for reference. See the **"Pin Diagrams"** section for device pin availability.

2: See **Section 24.0 "Ethernet Controller"** for more information.

© 2009-2013 Microchip Technology Inc.

TABLE 1-1: PINOUT I/O DESCRIPTIONS (CONTINUED)

Pin Name	Pin Number(1)				Pin Type	Buffer Type	Description
	64-Pin QFN/TQFP	100-Pin TQFP	121-Pin TFBGA	124-pin VTLA			
CN0	48	74	B11	B40	I	ST	Change notification inputs. Can be software programmed for internal weak pull-ups on all inputs.
CN1	47	73	C10	A47	I	ST	
CN2	16	25	K2	B14	I	ST	
CN3	15	24	K1	A15	I	ST	
CN4	14	23	J2	B13	I	ST	
CN5	13	22	J1	A13	I	ST	
CN6	12	21	H2	B11	I	ST	
CN7	11	20	H1	A12	I	ST	
CN8	4	10	E3	A7	I	ST	
CN9	5	11	F4	B6	I	ST	
CN10	6	12	F2	A8	I	ST	
CN11	8	14	F3	A9	I	ST	
CN12	30	44	L8	A29	I	ST	
CN13	52	81	C8	B44	I	ST	
CN14	53	82	B8	A55	I	ST	
CN15	54	83	D7	B45	I	ST	
CN16	55	84	C7	A56	I	ST	
CN17	31	49	L10	B27	I	ST	
CN18	32	50	L11	A32	I	ST	
CN19	—	80	D8	A54	I	ST	
CN20	—	47	L9	B26	I	ST	
CN21	—	48	K9	A31	I	ST	
IC1	42	68	E9	B37	I	ST	Capture Inputs 1-5
IC2	43	69	E10	A45	I	ST	
IC3	44	70	D11	B38	I	ST	
IC4	45	71	C11	A46	I	ST	
IC5	52	79	A9	A60	I	ST	
OCFA	17	26	L1	A20	I	ST	Output Compare Fault A Input
OC1	46	72	D9	B39	O	—	Output Compare Output 1
OC2	49	76	A11	A52	O	—	Output Compare Output 2
OC3	50	77	A10	B42	O	—	Output Compare Output 3
OC4	51	78	B9	A53	O	—	Output Compare Output 4
OC5	52	81	C8	B44	O	—	Output Compare Output 5
OCFB	30	44	L8	A29	I	ST	Output Compare Fault B Input
INT0	46	72	D9	B39	I	ST	External Interrupt 0
INT1	42	18	G1	A11	I	ST	External Interrupt 1
INT2	43	19	G2	B10	I	ST	External Interrupt 2
INT3	44	66	E11	B36	I	ST	External Interrupt 3
INT4	45	67	E8	A44	I	ST	External Interrupt 4

Legend: CMOS = CMOS compatible input or output; Analog = Analog input; P = Power
ST = Schmitt Trigger input with CMOS levels; O = Output; I = Input
TTL = TTL input buffer

Note 1: Pin numbers are only provided for reference. See the **"Pin Diagrams"** section for device pin availability.
2: See **Section 24.0 "Ethernet Controller"** for more information.

TABLE 1-1: PINOUT I/O DESCRIPTIONS (CONTINUED)

Pin Name	Pin Number(1)				Pin Type	Buffer Type	Description
	64-Pin QFN/TQFP	100-Pin TQFP	121-Pin TFBGA	124-pin VTLA			
RA0	—	17	G3	B9	I/O	ST	PORTA is a bidirectional I/O port
RA1	—	38	J6	A26	I/O	ST	
RA2	—	58	H11	A39	I/O	ST	
RA3	—	59	G10	B32	I/O	ST	
RA4	—	60	G11	A40	I/O	ST	
RA5	—	61	G9	B33	I/O	ST	
RA6	—	91	C5	B51	I/O	ST	
RA7	—	92	B5	A62	I/O	ST	
RA9	—	28	L2	A21	I/O	ST	
RA10	—	29	K3	B17	I/O	ST	
RA14	—	66	E11	B36	I/O	ST	
RA15	—	67	E8	A44	I/O	ST	
RB0	16	25	K2	B14	I/O	ST	PORTB is a bidirectional I/O port
RB1	15	24	K1	A15	I/O	ST	
RB2	14	23	J2	B13	I/O	ST	
RB3	13	22	J1	A13	I/O	ST	
RB4	12	21	H2	B11	I/O	ST	
RB5	11	20	H1	A12	I/O	ST	
RB6	17	26	L1	A20	I/O	ST	
RB7	18	27	J3	B16	I/O	ST	
RB8	21	32	K4	A23	I/O	ST	
RB9	22	33	L4	B19	I/O	ST	
RB10	23	34	L5	A24	I/O	ST	
RB11	24	35	J5	B20	I/O	ST	
RB12	27	41	J7	B23	I/O	ST	
RB13	28	42	L7	A28	I/O	ST	
RB14	29	43	K7	B24	I/O	ST	
RB15	30	44	L8	A29	I/O	ST	
RC1	—	6	D1	A5	I/O	ST	PORTC is a bidirectional I/O port
RC2	—	7	E4	B4	I/O	ST	
RC3	—	8	E2	A6	I/O	ST	
RC4	—	9	E1	B5	I/O	ST	
RC12	39	63	F9	B34	I/O	ST	
RC13	47	73	C10	A47	I/O	ST	
RC14	48	74	B11	B40	I/O	ST	
RC15	40	64	F11	A42	I/O	ST	

Legend: CMOS = CMOS compatible input or output; Analog = Analog input; P = Power
ST = Schmitt Trigger input with CMOS levels; O = Output; I = Input
TTL = TTL input buffer

Note 1: Pin numbers are only provided for reference. See the **"Pin Diagrams"** section for device pin availability.
2: See **Section 24.0 "Ethernet Controller"** for more information.

© 2009-2013 Microchip Technology Inc.

TABLE 1-1: PINOUT I/O DESCRIPTIONS (CONTINUED)

Pin Name	Pin Number(1)				Pin Type	Buffer Type	Description
	64-Pin QFN/TQFP	100-Pin TQFP	121-Pin TFBGA	124-pin VTLA			
RD0	46	72	D9	B39	I/O	ST	PORTD is a bidirectional I/O port
RD1	49	76	A11	A52	I/O	ST	
RD2	50	77	A10	B42	I/O	ST	
RD3	51	78	B9	A53	I/O	ST	
RD4	52	81	C8	B44	I/O	ST	
RD5	53	82	B8	A55	I/O	ST	
RD6	54	83	D7	B45	I/O	ST	
RD7	55	84	C7	A56	I/O	ST	
RD8	42	68	E9	B37	I/O	ST	
RD9	43	69	E10	A45	I/O	ST	
RD10	44	70	D11	B38	I/O	ST	
RD11	45	71	C11	A46	I/O	ST	
RD12	—	79	A9	B43	I/O	ST	
RD13	—	80	D8	A54	I/O	ST	
RD14	—	47	L9	B26	I/O	ST	
RD15	—	48	K9	A31	I/O	ST	
RE0	60	93	A4	B52	I/O	ST	PORTE is a bidirectional I/O port
RE1	61	94	B4	A64	I/O	ST	
RE2	62	98	B3	A66	I/O	ST	
RE3	63	99	A2	B56	I/O	ST	
RE4	64	100	A1	A67	I/O	ST	
RE5	1	3	D3	B2	I/O	ST	
RE6	2	4	C1	A4	I/O	ST	
RE7	3	5	D2	B3	I/O	ST	
RE8	—	18	G1	A11	I/O	ST	
RE9	—	19	G2	B10	I/O	ST	
RF0	58	87	B6	B49	I/O	ST	PORTF is a bidirectional I/O port
RF1	59	88	A6	A60	I/O	ST	
RF2	—	52	K11	A36	I/O	ST	
RF3	33	51	K10	A35	I/O	ST	
RF4	31	49	L10	B27	I/O	ST	
RF5	32	50	L11	A32	I/O	ST	
RF8	—	53	J10	B29	I/O	ST	
RF12	—	40	K6	A27	I/O	ST	
RF13	—	39	L6	B22	I/O	ST	

Legend: CMOS = CMOS compatible input or output; Analog = Analog input; P = Power
ST = Schmitt Trigger input with CMOS levels; O = Output; I = Input
TTL = TTL input buffer

Note 1: Pin numbers are only provided for reference. See the **"Pin Diagrams"** section for device pin availability.
2: See **Section 24.0 "Ethernet Controller"** for more information.

TABLE 1-1: PINOUT I/O DESCRIPTIONS (CONTINUED)

Pin Name	Pin Number(1)				Pin Type	Buffer Type	Description
	64-Pin QFN/TQFP	100-Pin TQFP	121-Pin TFBGA	124-pin VTLA			
RG0	—	90	A5	A61	I/O	ST	PORTG is a bidirectional I/O port
RG1	—	89	E6	B50	I/O	ST	
RG6	4	10	E3	A7	I/O	ST	
RG7	5	11	F4	B6	I/O	ST	
RG8	6	12	F2	A8	I/O	ST	
RG9	8	14	F3	A9	I/O	ST	
RG12	—	96	C3	A65	I/O	ST	
RG13	—	97	A3	B55	I/O	ST	
RG14	—	95	C4	B54	I/O	ST	
RG15	—	1	B2	A2	I/O	ST	
RG2	37	57	H10	B31	I	ST	PORTG input pins
RG3	36	56	J11	A38	I	ST	
T1CK	48	74	B11	B40	I	ST	Timer1 external clock input
T2CK	—	6	D1	A5	I	ST	Timer2 external clock input
T3CK	—	7	E4	B4	I	ST	Timer3 external clock input
T4CK	—	8	E2	A6	I	ST	Timer4 external clock input
T5CK	—	9	E1	B5	I	ST	Timer5 external clock input
$\overline{\text{U1CTS}}$	43	47	L9	B26	I	ST	UART1 clear to send
$\overline{\text{U1RTS}}$	49	48	K9	A31	O	—	UART1 ready to send
U1RX	50	52	K11	A36	I	ST	UART1 receive
U1TX	51	53	J10	B29	O	—	UART1 transmit
$\overline{\text{U3CTS}}$	8	14	F3	A9	I	ST	UART3 clear to send
$\overline{\text{U3RTS}}$	4	10	E3	A7	O	—	UART3 ready to send
U3RX	5	11	F4	B6	I	ST	UART3 receive
U3TX	6	12	F2	A8	O	—	UART3 transmit
$\overline{\text{U2CTS}}$	21	40	K6	A27	I	ST	UART2 clear to send
$\overline{\text{U2RTS}}$	29	39	L6	B22	O	—	UART2 ready to send
U2RX	31	49	L10	B27	I	ST	UART2 receive
U2TX	32	50	L11	A32	O	—	UART2 transmit
U4RX	43	47	L9	B26	I	ST	UART4 receive
U4TX	49	48	K9	A31	O	—	UART4 transmit
U6RX	8	14	F3	A9	I	ST	UART6 receive
U6TX	4	10	E3	A7	O	—	UART6 transmit
U5RX	21	40	K6	A27	I	ST	UART5 receive
U5TX	29	39	L6	B22	O	—	UART5 transmit
SCK1	—	70	D11	B38	I/O	ST	Synchronous serial clock input/output for SPI1
SDI1	—	9	E1	B5	I	ST	SPI1 data in

Legend: CMOS = CMOS compatible input or output; Analog = Analog input; P = Power
ST = Schmitt Trigger input with CMOS levels; O = Output; I = Input
TTL = TTL input buffer

Note 1: Pin numbers are only provided for reference. See the **"Pin Diagrams"** section for device pin availability.
2: See **Section 24.0 "Ethernet Controller"** for more information.

© 2009-2013 Microchip Technology Inc.

TABLE 1-1: PINOUT I/O DESCRIPTIONS (CONTINUED)

Pin Name	Pin Number(1)				Pin Type	Buffer Type	Description
	64-Pin QFN/TQFP	100-Pin TQFP	121-Pin TFBGA	124-pin VTLA			
SDO1	—	72	D9	B39	O	—	SPI1 data out
$\overline{SS1}$	—	69	E10	A45	I/O	ST	SPI1 slave synchronization or frame pulse I/O
SCK3	49	48	K9	A31	I/O	ST	Synchronous serial clock input/output for SPI3
SDI3	50	52	K11	A36	I	ST	SPI3 data in
SDO3	51	53	J10	B29	O	—	SPI3 data out
$\overline{SS3}$	43	47	L9	B26	I/O	ST	SPI3 slave synchronization or frame pulse I/O
SCK2	4	10	E3	A7	I/O	ST	Synchronous serial clock input/output for SPI2
SDI2	5	11	F4	B6	I	ST	SPI2 data in
SDO2	6	12	F2	A8	O	—	SPI2 data out
$\overline{SS2}$	8	14	F3	A9	I/O	ST	SPI2 slave synchronization or frame pulse I/O
SCK4	29	39	L6	B22	I/O	ST	Synchronous serial clock input/output for SPI4
SDI4	31	49	L10	B27	I	ST	SPI4 data in
SDO4	32	50	L11	A32	O	—	SPI4 data out
$\overline{SS4}$	21	40	K6	A27	I/O	ST	SPI4 slave synchronization or frame pulse I/O
SCL1	44	66	E11	B36	I/O	ST	Synchronous serial clock input/output for I2C1
SDA1	43	67	E8	A44	I/O	ST	Synchronous serial data input/output for I2C1
SCL3	51	53	J10	B29	I/O	ST	Synchronous serial clock input/output for I2C3
SDA3	50	52	K11	A36	I/O	ST	Synchronous serial data input/output for I2C3
SCL2	—	58	H11	A39	I/O	ST	Synchronous serial clock input/output for I2C2
SDA2	—	59	G10	B32	I/O	ST	Synchronous serial data input/output for I2C2
SCL4	6	12	F2	A8	I/O	ST	Synchronous serial clock input/output for I2C4
SDA4	5	11	F4	B6	I/O	ST	Synchronous serial data input/output for I2C4
SCL5	32	50	L11	A32	I/O	ST	Synchronous serial clock input/output for I2C5
SDA5	31	49	L10	B27	I/O	ST	Synchronous serial data input/output for I2C5

Legend: CMOS = CMOS compatible input or output; Analog = Analog input; P = Power; ST = Schmitt Trigger input with CMOS levels; O = Output; I = Input; TTL = TTL input buffer

Note 1: Pin numbers are only provided for reference. See the **"Pin Diagrams"** section for device pin availability.

2: See **Section 24.0 "Ethernet Controller"** for more information.

TABLE 1-1: PINOUT I/O DESCRIPTIONS (CONTINUED)

Pin Name	Pin Number(1)				Pin Type	Buffer Type	Description
	64-Pin QFN/TQFP	100-Pin TQFP	121-Pin TFBGA	124-pin VTLA			
TMS	23	17	G3	B9	I	ST	JTAG Test mode select pin
TCK	27	38	J6	A26	I	ST	JTAG test clock input pin
TDI	28	60	G11	A40	I	ST	JTAG test data input pin
TDO	24	61	G9	B33	O	—	JTAG test data output pin
RTCC	42	68	E9	B37	O	—	Real-Time Clock alarm output
CVREF-	15	28	L2	A21	I	Analog	Comparator Voltage Reference (low)
CVREF+	16	29	K3	B17	I	Analog	Comparator Voltage Reference (high)
CVREFOUT	23	34	L5	A24	O	Analog	Comparator Voltage Reference output
C1IN-	12	21	H2	B11	I	Analog	Comparator 1 negative input
C1IN+	11	20	H1	A12	I	Analog	Comparator 1 positive input
C1OUT	21	32	K4	A23	O	—	Comparator 1 output
C2IN-	14	23	J2	B13	I	Analog	Comparator 2 negative input
C2IN+	13	22	J1	A13	I	Analog	Comparator 2 positive input
C2OUT	22	33	L4	B19	O	—	Comparator 2 output
PMA0	30	44	L8	A29	I/O	TTL/ST	Parallel Master Port Address bit 0 input (Buffered Slave modes) and output (Master modes)
PMA1	29	43	K7	B24	I/O	TTL/ST	Parallel Master Port Address bit 1 input (Buffered Slave modes) and output (Master modes)
PMA2	8	14	F3	A9	O	—	Parallel Master Port address (Demultiplexed Master modes)
PMA3	6	12	F2	A8	O	—	
PMA4	5	11	F4	B6	O	—	
PMA5	4	10	E3	A7	O	—	
PMA6	16	29	K3	B17	O	—	
PMA7	22	28	L2	A21	O	—	
PMA8	32	50	L11	A32	O	—	
PMA9	31	49	L10	B27	O	—	
PMA10	28	42	L7	A28	O	—	
PMA11	27	41	J7	B23	O	—	
PMA12	24	35	J5	B20	O	—	
PMA13	23	34	L5	A24	O	—	
PMA14	45	71	C11	A46	O	—	
PMA15	44	70	D11	B38	O	—	
PMCS1	45	71	C11	A46	O	—	Parallel Master Port Chip Select 1 strobe
PMCS2	44	70	D11	B38	O	—	Parallel Master Port Chip Select 2 strobe

Legend: CMOS = CMOS compatible input or output; ST = Schmitt Trigger input with CMOS levels; TTL = TTL input buffer; Analog = Analog input; O = Output; P = Power; I = Input

Note 1: Pin numbers are only provided for reference. See the **"Pin Diagrams"** section for device pin availability.

2: See **Section 24.0 "Ethernet Controller"** for more information.

© 2009-2013 Microchip Technology Inc.

TABLE 1-1: PINOUT I/O DESCRIPTIONS (CONTINUED)

Pin Name	Pin Number(1)				Pin Type	Buffer Type	Description
	64-Pin QFN/TQFP	100-Pin TQFP	121-Pin TFBGA	124-pin VTLA			
PMD0	60	93	A4	B52	I/O	TTL/ST	Parallel Master Port data (Demultiplexed Master mode) or address/data (Multiplexed Master modes)
PMD1	61	94	B4	A64	I/O	TTL/ST	
PMD2	62	98	B3	A66	I/O	TTL/ST	
PMD3	63	99	A2	B56	I/O	TTL/ST	
PMD4	64	100	A1	A67	I/O	TTL/ST	
PMD5	1	3	D3	B2	I/O	TTL/ST	
PMD6	2	4	C1	A4	I/O	TTL/ST	
PMD7	3	5	D2	B3	I/O	TTL/ST	
PMD8	—	90	A5	A61	I/O	TTL/ST	
PMD9	—	89	E6	B50	I/O	TTL/ST	
PMD10	—	88	A6	A60	I/O	TTL/ST	
PMD11	—	87	B6	B49	I/O	TTL/ST	
PMD12	—	79	A9	B43	I/O	TTL/ST	
PMD13	—	80	D8	A54	I/O	TTL/ST	
PMD14	—	83	D7	B45	I/O	TTL/ST	
PMD15	—	84	C7	A56	I/O	TTL/ST	
PMALL	30	44	L8	A29	O	—	Parallel Master Port address latch enable low byte (Multiplexed Master modes)
PMALH	29	43	K7	B24	O	—	Parallel Master Port address latch enable high byte (Multiplexed Master modes)
PMRD	53	82	B8	A55	O	—	Parallel Master Port read strobe
PMWR	52	81	C8	B44	O	—	Parallel Master Port write strobe
VBUS	34	54	H8	A37	I	Analog	USB bus power monitor
VUSB3V3	35	55	H9	B30	P	—	USB internal transceiver supply. If the USB module is *not* used, this pin must be connected to VDD.
VBUSON	11	20	H1	A12	O	—	USB Host and OTG bus power control output
D+	37	57	H10	B31	I/O	Analog	USB D+
D-	36	56	J11	A38	I/O	Analog	USB D-
USBID	33	51	K10	A35	I	ST	USB OTG ID detect
C1RX	58	87	B6	B49	I	ST	CAN1 bus receive pin
C1TX	59	88	A6	A60	O	—	CAN1 bus transmit pin
AC1RX	32	40	K6	A27	I	ST	Alternate CAN1 bus receive pin
AC1TX	31	39	L6	B22	O	—	Alternate CAN1 bus transmit pin
C2RX	29	90	A5	A61	I	ST	CAN2 bus receive pin
C2TX	21	89	E6	B50	O	—	CAN2 bus transmit pin
AC2RX	—	8	E2	A6	1	ST	Alternate CAN2 bus receive pin
AC2TX	—	7	E4	B4	O	—	Alternate CAN2 bus transmit pin

Legend: CMOS = CMOS compatible input or output; Analog = Analog input; P = Power; ST = Schmitt Trigger input with CMOS levels; O = Output; I = Input; TTL = TTL input buffer

Note 1: Pin numbers are only provided for reference. See the **"Pin Diagrams"** section for device pin availability.

2: See **Section 24.0 "Ethernet Controller"** for more information.

TABLE 1-1: PINOUT I/O DESCRIPTIONS (CONTINUED)

Pin Name	Pin Number[1]				Pin Type	Buffer Type	Description
	64-Pin QFN/TQFP	100-Pin TQFP	121-Pin TFBGA	124-pin VTLA			
ERXD0	61	41	J7	B23	I	ST	Ethernet Receive Data 0[2]
ERXD1	60	42	L7	A28	I	ST	Ethernet Receive Data 1[2]
ERXD2	59	43	K7	B24	I	ST	Ethernet Receive Data 2[2]
ERXD3	58	44	L8	A29	I	ST	Ethernet Receive Data 3[2]
ERXERR	64	35	J5	B20	I	ST	Ethernet receive error input[2]
ERXDV	62	12	F2	A8	I	ST	Ethernet receive data valid[2]
ECRSDV	62	12	F2	A8	I	ST	Ethernet carrier sense data valid[2]
ERXCLK	63	14	F3	A9	I	ST	Ethernet receive clock[2]
EREFCLK	63	14	F3	A9	I	ST	Ethernet reference clock[2]
ETXD0	2	88	A6	A60	O	—	Ethernet Transmit Data 0[2]
ETXD1	3	87	B6	B49	O	—	Ethernet Transmit Data 1[2]
ETXD2	43	79	A9	B43	O	—	Ethernet Transmit Data 2[2]
ETXD3	42	80	D8	A54	O	—	Ethernet Transmit Data 3[2]
ETXERR	54	89	E6	B50	O	—	Ethernet transmit error[2]
ETXEN	1	83	D7	B45	O	—	Ethernet transmit enable[2]
ETXCLK	55	84	C7	A56	I	ST	Ethernet transmit clock[2]
ECOL	44	10	E3	A7	I	ST	Ethernet collision detect[2]
ECRS	45	11	F4	B6	I	ST	Ethernet carrier sense[2]
EMDC	30	71	C11	A46	O	—	Ethernet management data clock[2]
EMDIO	49	68	E9	B37	I/O	—	Ethernet management data[2]
AERXD0	43	18	G1	A11	I	ST	Alternate Ethernet Receive Data 0[2]
AERXD1	42	19	G2	B10	I	ST	Alternate Ethernet Receive Data 1[2]
AERXD2	—	28	L2	A21	I	ST	Alternate Ethernet Receive Data 2[2]
AERXD3	—	29	K3	B17	I	ST	Alternate Ethernet Receive Data 3[2]
AERXERR	55	1	B2	A2	I	ST	Alternate Ethernet receive error input[2]
AERXDV	—	12	F2	A8	I	ST	Alternate Ethernet receive data valid[2]
AECRSDV	44	12	F2	A8	I	ST	Alternate Ethernet carrier sense data valid[2]
AERXCLK	—	14	F3	A9	I	ST	Alternate Ethernet receive clock[2]
AEREFCLK	45	14	F3	A9	I	ST	Alternate Ethernet reference clock[2]
AETXD0	59	47	L9	B26	O	—	Alternate Ethernet Transmit Data 0[2]
AETXD1	58	48	K9	A31	O	—	Alternate Ethernet Transmit Data 1[2]
AETXD2	—	44	L8	A29	O	—	Alternate Ethernet Transmit Data 2[2]
AETXD3	—	43	K7	B24	O	—	Alternate Ethernet Transmit Data 3[2]
AETXERR	—	35	J5	B20	O	—	Alternate Ethernet transmit error[2]
AETXEN	54	67	E8	A44	O	—	Alternate Ethernet transmit enable[2]
AETXCLK	—	66	E11	B36	I	ST	Alternate Ethernet transmit clock[2]
AECOL	—	42	L7	A28	I	ST	Alternate Ethernet collision detect[2]
AECRS	—	41	J7	B23	I	ST	Alternate Ethernet carrier sense[2]

Legend: CMOS = CMOS compatible input or output; ST = Schmitt Trigger input with CMOS levels; TTL = TTL input buffer; Analog = Analog input; O = Output; P = Power; I = Input

Note 1: Pin numbers are only provided for reference. See the **"Pin Diagrams"** section for device pin availability.

2: See **Section 24.0 "Ethernet Controller"** for more information.

© 2009-2013 Microchip Technology Inc.

TABLE 1-1: PINOUT I/O DESCRIPTIONS (CONTINUED)

Pin Name	Pin Number(1)				Pin Type	Buffer Type	Description
	64-Pin QFN/TQFP	100-Pin TQFP	121-Pin TFBGA	124-pin VTLA			
AEMDC	30	71	C11	A46	O	—	Alternate Ethernet Management Data clock(2)
AEMDIO	49	68	E9	B37	I/O	—	Alternate Ethernet Management Data(2)
TRCLK	—	91	C5	B51	O	—	Trace clock
TRD0	—	97	A3	B55	O	—	Trace Data bits 0-3
TRD1	—	96	C3	A65	O	—	
TRD2	—	95	C4	B54	O	—	
TRD3	—	92	B5	A62	O	—	
PGED1	16	25	K2	B14	I/O	ST	Data I/O pin for Programming/ Debugging Communication Channel 1
PGEC1	15	24	K1	A15	I	ST	Clock input pin for Programming/ Debugging Communication Channel 1
PGED2	18	27	J3	B16	I/O	ST	Data I/O pin for Programming/ Debugging Communication Channel 2
PGEC2	17	26	L1	A20	I	ST	Clock input pin for Programming/ Debugging Communication Channel 2
$\overline{MCLR}$	7	13	F1	B7	I/P	ST	Master Clear (Reset) input. This pin is an active-low Reset to the device.
AVDD	19	30	J4	A22	P	P	Positive supply for analog modules. This pin must be connected at all times.
AVSS	20	31	L3	B18	P	P	Ground reference for analog modules
VDD	10, 26, 38, 57	2, 16, 37, 46, 62, 86	A7, C2, C9, E5, K8, F8, G5, H4, H6	A10, A14, A30, A41, A48, A59, B1, B21, B53	P	—	Positive supply for peripheral logic and I/O pins
VCAP	56	85	B7	B48	P	—	Capacitor for Internal Voltage Regulator
VSS	9, 25, 41	15, 36, 45, 65, 75	A8, B10, D4, D5, E7, F5, F10, G6, G7, H3	A3, A25, A43, A63, B8, B12, B25, B41, B46	P	—	Ground reference for logic and I/O pins. This pin must be connected at all times.
VREF+	16	29	K3	B17	I	Analog	Analog voltage reference (high) input
VREF-	15	28	L2	A21	I	Analog	Analog voltage reference (low) input

Legend: CMOS = CMOS compatible input or output; ST = Schmitt Trigger input with CMOS levels; TTL = TTL input buffer; Analog = Analog input; O = Output; P = Power; I = Input

Note 1: Pin numbers are only provided for reference. See the **"Pin Diagrams"** section for device pin availability.

2: See **Section 24.0 "Ethernet Controller"** for more information.

NOTES:

© 2009-2013 Microchip Technology Inc.

2.0 GUIDELINES FOR GETTING STARTED WITH 32-BIT MCUS

Note 1: This data sheet summarizes the features of the PIC32MX5XX/6XX/7XX family of devices. It is not intended to be a comprehensive reference source. To complement the information in this data sheet, refer to the related section of the *"PIC32 Family Reference Manual"*, which is available from the Microchip web site (www.microchip.com/PIC32).

2: Some registers and associated bits described in this section may not be available on all devices. Refer to **Section 4.0 "Memory Organization"** in this data sheet for device-specific register and bit information.

2.1 Basic Connection Requirements

Getting started with the PIC32MX5XX/6XX/7XX family of 32-bit Microcontrollers (MCUs) requires attention to a minimal set of device pin connections before proceeding with development. The following is a list of pin names, which must always be connected:

- All VDD and VSS pins (see **2.2 "Decoupling Capacitors"**)
- All AVDD and AVSS pins even if the ADC module is not used (see **2.2 "Decoupling Capacitors"**)
- VCAP pin (see **2.3 "Capacitor on Internal Voltage Regulator (VCAP)"**)
- $\overline{\text{MCLR}}$ pin (see **2.4 "Master Clear (MCLR) Pin"**)
- PGECx/PGEDx pins used for In-Circuit Serial Programming™ (ICSP™) and debugging purposes (see **2.5 "ICSP Pins"**)
- OSC1 and OSC2 pins when external oscillator source is used (see **2.8 "External Oscillator Pins"**)

The following pin may be required, as well: VREF+/VREF- pins used when external voltage reference for ADC module is implemented.

Note: The AVDD and AVSS pins must be connected, regardless of the ADC use and the ADC voltage reference source.

2.2 Decoupling Capacitors

The use of decoupling capacitors on power supply pins, such as VDD, VSS, AVDD and AVSS is required. See Figure 2-1.

Consider the following criteria when using decoupling capacitors:

- **Value and type of capacitor:** A value of 0.1 µF (100 nF), 10-20V is recommended. The capacitor should be a low Equivalent Series Resistance (low-ESR) capacitor and have resonance frequency in the range of 20 MHz and higher. It is further recommended to use ceramic capacitors.
- **Placement on the printed circuit board:** The decoupling capacitors should be placed as close to the pins as possible. It is recommended that the capacitors be placed on the same side of the board as the device. If space is constricted, the capacitor can be placed on another layer on the PCB using a via; however, ensure that the trace length from the pin to the capacitor is within one-quarter inch (6 mm) in length.
- **Handling high frequency noise:** If the board is experiencing high frequency noise, upward of tens of MHz, add a second ceramic-type capacitor in parallel to the above described decoupling capacitor. The value of the second capacitor can be in the range of 0.01 µF to 0.001 µF. Place this second capacitor next to the primary decoupling capacitor. In high-speed circuit designs, consider implementing a decade pair of capacitances as close to the power and ground pins as possible. For example, 0.1 µF in parallel with 0.001 µF.
- **Maximizing performance:** On the board layout from the power supply circuit, run the power and return traces to the decoupling capacitors first, and then to the device pins. This ensures that the decoupling capacitors are first in the power chain. Equally important is to keep the trace length between the capacitor and the power pins to a minimum, thereby reducing PCB track inductance.

FIGURE 2-1: RECOMMENDED MINIMUM CONNECTION

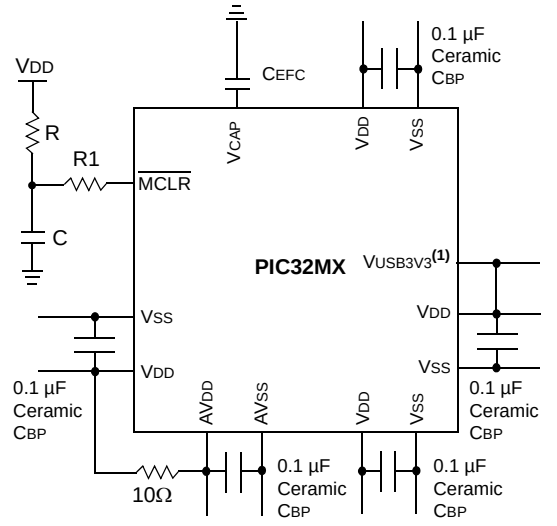

Note 1: If the USB module is used, this pin must be connected to VDD.

2.2.1 BULK CAPACITORS

The use of a bulk capacitor is recommended to improve power supply stability. Typical values range from 4.7 µF to 47 µF. This capacitor should be located as close to the device as possible.

2.3 Capacitor on Internal Voltage Regulator (VCAP)

2.3.1 INTERNAL REGULATOR MODE

A low-ESR (1 ohm) capacitor is required on the VCAP pin, which is used to stabilize the internal voltage regulator output. The VCAP pin must not be connected to VDD, and must have a CEFC capacitor, with at least a 6V rating, connected to ground. The type can be ceramic or tantalum. Refer to **Section 31.0 "Electrical Characteristics"** for additional information on CEFC specifications.

2.4 Master Clear ($\overline{\text{MCLR}}$) Pin

The $\overline{\text{MCLR}}$ pin provides two specific device functions:

- Device Reset
- Device Programming and Debugging

Pulling The $\overline{\text{MCLR}}$ pin low generates a device Reset. Figure 2-2 illustrates a typical $\overline{\text{MCLR}}$ circuit. During device programming and debugging, the resistance and capacitance that can be added to the pin must be considered. Device programmers and debuggers drive the $\overline{\text{MCLR}}$ pin. Consequently, specific voltage levels (VIH and VIL) and fast signal transitions must not be adversely affected. Therefore, specific values of R and C will need to be adjusted based on the application and PCB requirements.

For example, as illustrated in Figure 2-2, it is recommended that the capacitor C, be isolated from the $\overline{\text{MCLR}}$ pin during programming and debugging operations.

Place the components illustrated in Figure 2-2 within one-quarter inch (6 mm) from the $\overline{\text{MCLR}}$ pin.

FIGURE 2-2: EXAMPLE OF $\overline{\text{MCLR}}$ PIN CONNECTIONS

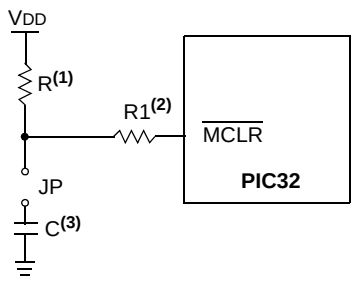

Note 1: R ≤ 10 kΩ is recommended. A suggested starting value is 10 kΩ. Ensure that the $\overline{\text{MCLR}}$ pin VIH and VIL specifications are met.

2: R1 ≤ 470Ω will limit any current flowing into $\overline{\text{MCLR}}$ from the external capacitor C, in the event of $\overline{\text{MCLR}}$ pin breakdown, due to Electrostatic Discharge (ESD) or Electrical Overstress (EOS). Ensure that the $\overline{\text{MCLR}}$ pin VIH and VIL specifications are met.

3: The capacitor can be sized to prevent unintentional Resets from brief glitches or to extend the device Reset period during the POR.

2.5 ICSP Pins

The PGECx and PGEDx pins are used for In-Circuit Serial Programming™ (ICSP™) and debugging purposes. It is recommended to keep the trace length between the ICSP connector and the ICSP pins on the device as short as possible. If the ICSP connector is expected to experience an ESD event, a series resistor is recommended, with the value in the range of a few tens of Ohms, not to exceed 100 Ohms.

Pull-up resistors, series diodes and capacitors on the PGECx and PGEDx pins are not recommended as they will interfere with the programmer/debugger communications to the device. If such discrete components are an application requirement, they should be removed from the circuit during programming and debugging. Alternatively, refer to the AC/DC characteristics and timing requirements information in the respective device Flash programming specification for information on capacitive loading limits and pin input voltage high (VIH) and input low (VIL) requirements.

Ensure that the "Communication Channel Select" (i.e., PGECx/PGEDx pins) programmed into the device matches the physical connections for the ICSP to MPLAB® ICD 3 or MPLAB® REAL ICE™.

For more information on ICD 3 and REAL ICE connection requirements, refer to the following documents that are available on the Microchip web site.

- *"Using MPLAB® ICD 3"* (poster) (DS50001765)
- *"MPLAB® ICD 3 Design Advisory"* (DS50001764)
- *"MPLAB® REAL ICE™ In-Circuit Emulator User's Guide"* (DS50001616)
- *"Using MPLAB® REAL ICE™ Emulator"* (poster) (DS50001749)

2.6 JTAG

The TMS, TDO, TDI and TCK pins are used for testing and debugging according to the Joint Test Action Group (JTAG) standard. It is recommended to keep the trace length between the JTAG connector and the JTAG pins on the device as short as possible. If the JTAG connector is expected to experience an ESD event, a series resistor is recommended, with the value in the range of a few tens of Ohms, not to exceed 100 Ohms.

Pull-up resistors, series diodes and capacitors on the TMS, TDO, TDI and TCK pins are not recommended as they will interfere with the programmer/debugger communications to the device. If such discrete components are an application requirement, they should be removed from the circuit during programming and debugging. Alternatively, refer to the AC/DC characteristics and timing requirements information in the respective device Flash programming specification for information on capacitive loading limits and pin input voltage high (VIH) and input low (VIL) requirements.

© 2009-2013 Microchip Technology Inc.

2.7 Trace

The trace pins can be connected to a hardware-trace-enabled programmer to provide a compress real time instruction trace. When used for trace the TRD3, TRD2, TRD1, TRD0 and TRCLK pins should be dedicated for this use. The trace hardware requires a 22Ω series resistor between the trace pins and the trace connector.

2.8 External Oscillator Pins

Many MCUs have options for at least two oscillators: a high-frequency primary oscillator and a low-frequency secondary oscillator. Refer to **Section 8.0 "Oscillator Configuration"** for details.

The oscillator circuit should be placed on the same side of the board as the device. Also, place the oscillator circuit close to the respective oscillator pins, not exceeding one-half inch (12 mm) distance between them. The load capacitors should be placed next to the oscillator itself, on the same side of the board. Use a grounded copper pour around the oscillator circuit to isolate them from surrounding circuits. The grounded copper pour should be routed directly to the MCU ground. Do not run any signal traces or power traces inside the ground pour. Also, if using a two-sided board, avoid any traces on the other side of the board where the crystal is placed. A suggested layout is illustrated in Figure 2-3.

FIGURE 2-3: SUGGESTED OSCILLATOR CIRCUIT PLACEMENT

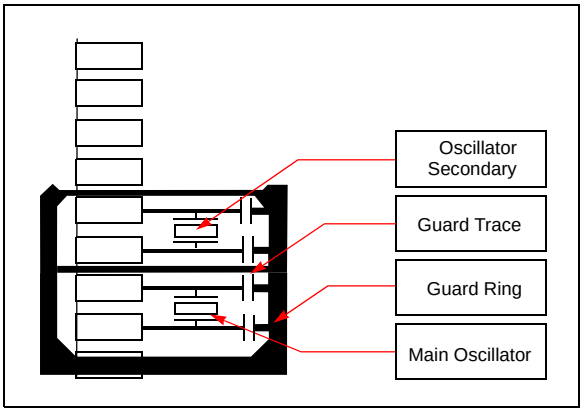

2.9 Configuration of Analog and Digital Pins During ICSP Operations

If MPLAB ICD 3 or REAL ICE is selected as a debugger, it automatically initializes all of the Analog-to-Digital input pins (ANx) as "digital" pins by setting all bits in the AD1PCFG register.

The bits in this register that correspond to the Analog-to-Digital pins that are initialized by MPLAB ICD 3 or REAL ICE, must not be cleared by the user application firmware; otherwise, communication errors will result between the debugger and the device.

If your application needs to use certain ADC pins as analog input pins during the debug session, the user application must clear the corresponding bits in the AD1PCFG register during initialization of the ADC module.

When MPLAB ICD 3 or REAL ICE is used as a programmer, the user application firmware must correctly configure the AD1PCFG register. Automatic initialization of this register is only done during debugger operation. Failure to correctly configure the register(s) will result in all ADC pins being recognized as analog input pins, resulting in the port value being read as a logic '0', which may affect user application functionality.

2.10 Unused I/Os

Unused I/O pins should not be allowed to float as inputs. They can be configured as outputs and driven to a logic-low state.

Alternatively, inputs can be reserved by connecting the pin to VSS through a 1k to 10k resistor and configuring the pin as an input.

NOTES:

© 2009-2013 Microchip Technology Inc.

3.0 CPU

Note 1: This data sheet summarizes the features of the PIC32MX5XX/6XX/7XX family of devices. It is not intended to be a comprehensive reference source. To complement the information in this data sheet, refer to **Section 2. "CPU"** (DS60001113) in the *"PIC32 Family Reference Manual"*, which is available from the Microchip web site (www.microchip.com/PIC32). Resources for the MIPS32® M4K® Processor Core are available at http://www.mips.com.

2: Some registers and associated bits described in this section may not be available on all devices. Refer to **Section 4.0 "Memory Organization"** in this data sheet for device-specific register and bit information.

The MIPS32® M4K® Processor core is the heart of the PIC32MX5XX/6XX/7XX family processor. The CPU fetches instructions, decodes each instruction, fetches source operands, executes each instruction and writes the results of instruction execution to the proper destinations.

3.1 Features

- 5-stage pipeline
- 32-bit address and data paths
- MIPS32® Enhanced Architecture (Release 2)
  - Multiply-accumulate and multiply-subtract instructions
  - Targeted multiply instruction
  - Zero/One detect instructions
  - `WAIT` instruction
  - Conditional move instructions (`MOVN`, `MOVZ`)
  - Vectored interrupts
  - Programmable exception vector base
  - Atomic interrupt enable/disable
  - GPR shadow registers to minimize latency for interrupt handlers
  - Bit field manipulation instructions
- MIPS16e® code compression
  - 16-bit encoding of 32-bit instructions to improve code density
  - Special PC-relative instructions for efficient loading of addresses and constants
  - `SAVE` and `RESTORE` macro instructions for setting up and tearing down stack frames within subroutines
  - Improved support for handling 8-bit and 16-bit data types
- Simple Fixed Mapping Translation (FMT) mechanism
- Simple dual bus interface
  - Independent 32-bit address and data busses
  - Transactions can be aborted to improve interrupt latency
- Autonomous multiply/divide unit
  - Maximum issue rate of one 32x16 multiply per clock
  - Maximum issue rate of one 32x32 multiply every other clock
  - Early-in iterative divide. Minimum 11 and maximum 33 clock latency (dividend (*rs*) sign extension-dependent)
- Power control
  - Minimum frequency: 0 MHz
  - Low-Power mode (triggered by `WAIT` instruction)
  - Extensive use of local gated clocks
- EJTAG debug and instruction trace
  - Support for single stepping
  - Virtual instruction and data address/value
  - Breakpoints
  - PC tracing with trace compression

FIGURE 3-1: MIPS® M4K® PROCESSOR CORE BLOCK DIAGRAM

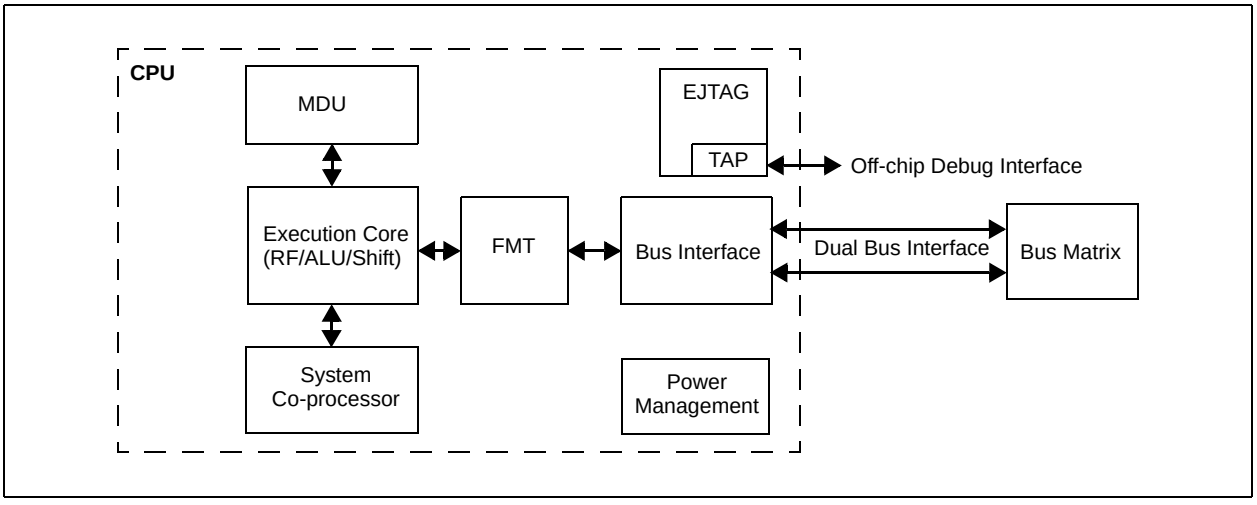

3.2 Architecture Overview

The MIPS® M4K® processor core contains several logic blocks working together in parallel, providing an efficient high-performance computing engine. The following blocks are included with the core:

- Execution Unit
- Multiply/Divide Unit (MDU)
- System Control Coprocessor (CP0)
- Fixed Mapping Translation (FMT)
- Dual Internal Bus interfaces
- Power Management
- MIPS16e® Support
- Enhanced JTAG (EJTAG) Controller

3.2.1 EXECUTION UNIT

The MIPS® M4K® processor core execution unit implements a load/store architecture with single-cycle ALU operations (logical, shift, add, subtract) and an autonomous multiply/divide unit. The core contains thirty-two 32-bit General Purpose Registers (GPRs) used for integer operations and address calculation. One additional register file shadow set (containing thirty-two registers) is added to minimize context switching overhead during interrupt/exception processing. The register file consists of two read ports and one write port and is fully bypassed to minimize operation latency in the pipeline.

The execution unit includes:

- 32-bit adder used for calculating the data address
- Address unit for calculating the next instruction address
- Logic for branch determination and branch target address calculation
- Load aligner
- Bypass multiplexers used to avoid stalls when executing instruction streams where data producing instructions are followed closely by consumers of their results
- Leading Zero/One detect unit for implementing the `CLZ` and `CLO` instructions
- Arithmetic Logic Unit (ALU) for performing bit-wise logical operations
- Shifter and store aligner

3.2.2 MULTIPLY/DIVIDE UNIT (MDU)

MIPS® M4K® processor core includes a Multiply/Divide Unit (MDU) that contains a separate pipeline for multiply and divide operations. This pipeline operates in parallel with the Integer Unit (IU) pipeline and does not stall when the IU pipeline stalls. This allows MDU operations to be partially masked by system stalls and/or other integer unit instructions.

The high-performance MDU consists of a 32x16 booth recoded multiplier, result/accumulation registers (HI and LO), a divide state machine, and the necessary multiplexers and control logic. The first number shown ('32' of 32x16) represents the *rs* operand. The second number ('16' of 32x16) represents the *rt* operand. The PIC32 core only checks the value of the latter (*rt)* operand to determine how many times the operation must pass through the multiplier. The 16x16 and 32x16 operations pass through the multiplier once. A 32x32 operation passes through the multiplier twice.

The MDU supports execution of one 16x16 or 32x16 multiply operation every clock cycle; 32x32 multiply operations can be issued every other clock cycle. Appropriate interlocks are implemented to stall the issuance of back-to-back 32x32 multiply operations. The multiply operand size is automatically determined by logic built into the MDU.

Divide operations are implemented with a simple 1 bit per clock iterative algorithm. An early-in detection checks the sign extension of the dividend (*rs*) operand. If *rs* is 8 bits wide, 23 iterations are skipped. For a 16 bit wide *rs*, 15 iterations are skipped and for a 24 bit wide *rs*, 7 iterations are skipped. Any attempt to issue a subsequent `MDU` instruction while a divide is still active causes an IU pipeline stall until the divide operation is completed.

Table 3-1 lists the repeat rate (peak issue rate of cycles until the operation can be reissued) and latency (number of cycles until a result is available) for the PIC32 core multiply and divide instructions. The approximate latency and repeat rates are listed in terms of pipeline clocks.

TABLE 3-1: MIPS® M4K® CORE HIGH-PERFORMANCE INTEGER MULTIPLY/DIVIDE UNIT LATENCIES AND REPEAT RATES

Opcode	Operand Size (mul *rt*) (div *rs*)	Latency	Repeat Rate
`MULT/MULTU, MADD/MADDU, MSUB/MSUBU`	16 bits	1	1
	32 bits	2	2
`MUL`	16 bits	2	1
	32 bits	3	2
`DIV/DIVU`	8 bits	12	11
	16 bits	19	18
	24 bits	26	25
	32 bits	33	32

© 2009-2013 Microchip Technology Inc.

The MIPS® architecture defines that the result of a multiply or divide operation be placed in the HI and LO registers. Using the Move-From-HI (MFHI) and Move-From-LO (MFLO) instructions, these values can be transferred to the General Purpose Register file.

In addition to the HI/LO targeted operations, the MIPS32® architecture also defines a multiply instruction, MUL, which places the least significant results in the primary register file instead of the HI/LO register pair. By avoiding the explicit MFLO instruction required when using the LO register, and by supporting multiple destination registers, the throughput of multiply-intensive operations is increased.

Two other instructions, Multiply-Add (MADD) and Multiply-Subtract (MSUB), are used to perform the multiply-accumulate and multiply-subtract operations. The MADD instruction multiplies two numbers and then adds the product to the current contents of the HI and LO registers. Similarly, the MSUB instruction multiplies two operands and then subtracts the product from the HI and LO registers. The MADD and MSUB operations are commonly used in DSP algorithms.

3.2.3 SYSTEM CONTROL COPROCESSOR (CP0)

In the MIPS® architecture, CP0 is responsible for the virtual-to-physical address translation, the exception control system, the processor's diagnostics capability, the operating modes (Kernel, User and Debug) and whether interrupts are enabled or disabled. Configuration information, such as presence of options like MIPS16e®, is also available by accessing the CP0 registers, listed in Table 3-2.

TABLE 3-2: COPROCESSOR 0 REGISTERS

Register Number	Register Name	Function
0-6	Reserved	Reserved.
7	HWREna	Enables access via the RDHWR instruction to selected hardware registers.
8	BadVAddr(1)	Reports the address for the most recent address-related exception.
9	Count(1)	Processor cycle count.
10	Reserved	Reserved.
11	Compare(1)	Timer interrupt control.
12	Status(1)	Processor status and control.
12	IntCtl(1)	Interrupt system status and control.
12	SRSCtl(1)	Shadow register set status and control.
12	SRSMap(1)	Provides mapping from vectored interrupt to a shadow set.
13	Cause(1)	Cause of last general exception.
14	EPC(1)	Program counter at last exception.
15	PRId	Processor identification and revision.
15	Ebase	Exception vector base register.
16	Config	Configuration register.
16	Config1	Configuration Register 1.
16	Config2	Configuration Register 2.
16	Config3	Configuration Register 3.
17-22	Reserved	Reserved.
23	Debug(2)	Debug control and exception status.
24	DEPC(2)	Program counter at last debug exception.
25-29	Reserved	Reserved.
30	ErrorEPC(1)	Program counter at last error.
31	DESAVE(2)	Debug handler scratchpad register.

Note 1: Registers used in exception processing.
2: Registers used during debug.

Coprocessor 0 also contains the logic for identifying and managing exceptions. Exceptions can be caused by a variety of sources, including alignment errors in data, external events or program errors. Table 3-3 lists the exception types in order of priority.

TABLE 3-3: PIC32MX5XX/6XX/7XX FAMILY CORE EXCEPTION TYPES

Exception	Description
Reset	Assertion $\overline{\text{MCLR}}$ or a Power-on Reset (POR).
DSS	EJTAG debug single step.
DINT	EJTAG debug interrupt. Caused by the assertion of the external *EJ_DINT* input or by setting the EjtagBrk bit in the ECR register.
NMI	Assertion of NMI signal.
Interrupt	Assertion of unmasked hardware or software interrupt signal.
DIB	EJTAG debug hardware instruction break matched.
AdEL	Fetch address alignment error. Fetch reference to protected address.
IBE	Instruction fetch bus error.
DBp	EJTAG breakpoint (execution of `SDBBP` instruction).
Sys	Execution of `SYSCALL` instruction.
Bp	Execution of `BREAK` instruction.
RI	Execution of a reserved instruction.
CpU	Execution of a coprocessor instruction for a coprocessor that is not enabled.
CEU	Execution of a `CorExtend` instruction when `CorExtend` is not enabled.
Ov	Execution of an arithmetic instruction that overflowed.
Tr	Execution of a trap (when trap condition is true).
DDBL/DDBS	EJTAG Data Address Break (address only) or EJTAG data value break on store (address + value).
AdEL	Load address alignment error. Load reference to protected address.
AdES	Store address alignment error. Store to protected address.
DBE	Load or store bus error.
DDBL	EJTAG data hardware breakpoint matched in load data compare.

© 2009-2013 Microchip Technology Inc.

3.3 Power Management

The MIPS® M4K® Processor core offers a number of power management features, including low-power design, active power management and power-down modes of operation. The core is a static design that supports slowing or halting the clocks, which reduces system power consumption during idle periods.

3.3.1 INSTRUCTION-CONTROLLED POWER MANAGEMENT

The mechanism for invoking Power-Down mode is through execution of the `WAIT` instruction. For more information on power management, see **Section 27.0 "Power-Saving Features"**.

3.3.2 LOCAL CLOCK GATING

The majority of the power consumed by the PIC32MX-5XX/6XX/7XX family core is in the clock tree and clocking registers. The PIC32 family uses extensive use of local gated clocks to reduce this dynamic power consumption.

3.4 EJTAG Debug Support

The MIPS® M4K® Processor core provides for an Enhanced JTAG (EJTAG) interface for use in the software debug of application and kernel code. In addition to standard User mode and Kernel modes of operation, the MIPS® M4K® core provides a Debug mode that is entered after a debug exception (derived from a hardware breakpoint, single-step exception, etc.) is taken and continues until a Debug Exception Return (`DERET`) instruction is executed. During this time, the processor executes the debug exception handler routine.

The EJTAG interface operates through the Test Access Port (TAP), a serial communication port used for transferring test data in and out of the MIPS® M4K® processor core. In addition to the standard JTAG instructions, special instructions defined in the EJTAG specification define which registers are selected and how they are used.

NOTES:

© 2009-2013 Microchip Technology Inc.

4.0 MEMORY ORGANIZATION

Note: This data sheet summarizes the features of the PIC32MX5XX/6XX/7XX family of devices. It is not intended to be a comprehensive reference source. For detailed information, refer to **Section 3. "Memory Organization"** (DS60001115) in the *"PIC32 Family Reference Manual"*, which is available from the Microchip web site (www.microchip.com/PIC32).

PIC32MX5XX/6XX/7XX microcontrollers provide 4 GB of unified virtual memory address space. All memory regions, including program, data memory, SFRs and Configuration registers, reside in this address space at their respective unique addresses. The program and data memories can be optionally partitioned into user and kernel memories. In addition, the data memory can be made executable, allowing PIC32MX5XX/6XX/7XX devices to execute from data memory.

Key features include:

- 32-bit native data width
- Separate User (KUSEG) and Kernel (KSEG0/KSEG1) mode address space
- Flexible program Flash memory partitioning
- Flexible data RAM partitioning for data and program space
- Separate boot Flash memory for protected code
- Robust bus exception handling to intercept runaway code
- Simple memory mapping with Fixed Mapping Translation (FMT) unit
- Cacheable (KSEG0) and non-cacheable (KSEG1) address regions

4.1 Memory Layout

PIC32MX5XX/6XX/7XX microcontrollers implement two address schemes: virtual and physical. All hardware resources, such as program memory, data memory and peripherals, are located at their respective physical addresses. Virtual addresses are exclusively used by the CPU to fetch and execute instructions as well as access peripherals. Physical addresses are used by bus master peripherals, such as DMA and the Flash controller, that access memory independently of the CPU.

The memory maps for the PIC32MX5XX/6XX/7XX devices are illustrated in Figure 4-1 through Figure 4-6.

4.1.1 PERIPHERAL REGISTERS LOCATIONS

Table 4-1 through Table 4-44 contain the peripheral address maps for the PIC32MX5XX/6XX/7XX devices.

FIGURE 4-1: MEMORY MAP ON RESET FOR PIC32MX564F064H, PIC32MX564F064L, PIC32MX664F064H AND PIC32MX664F064L DEVICES

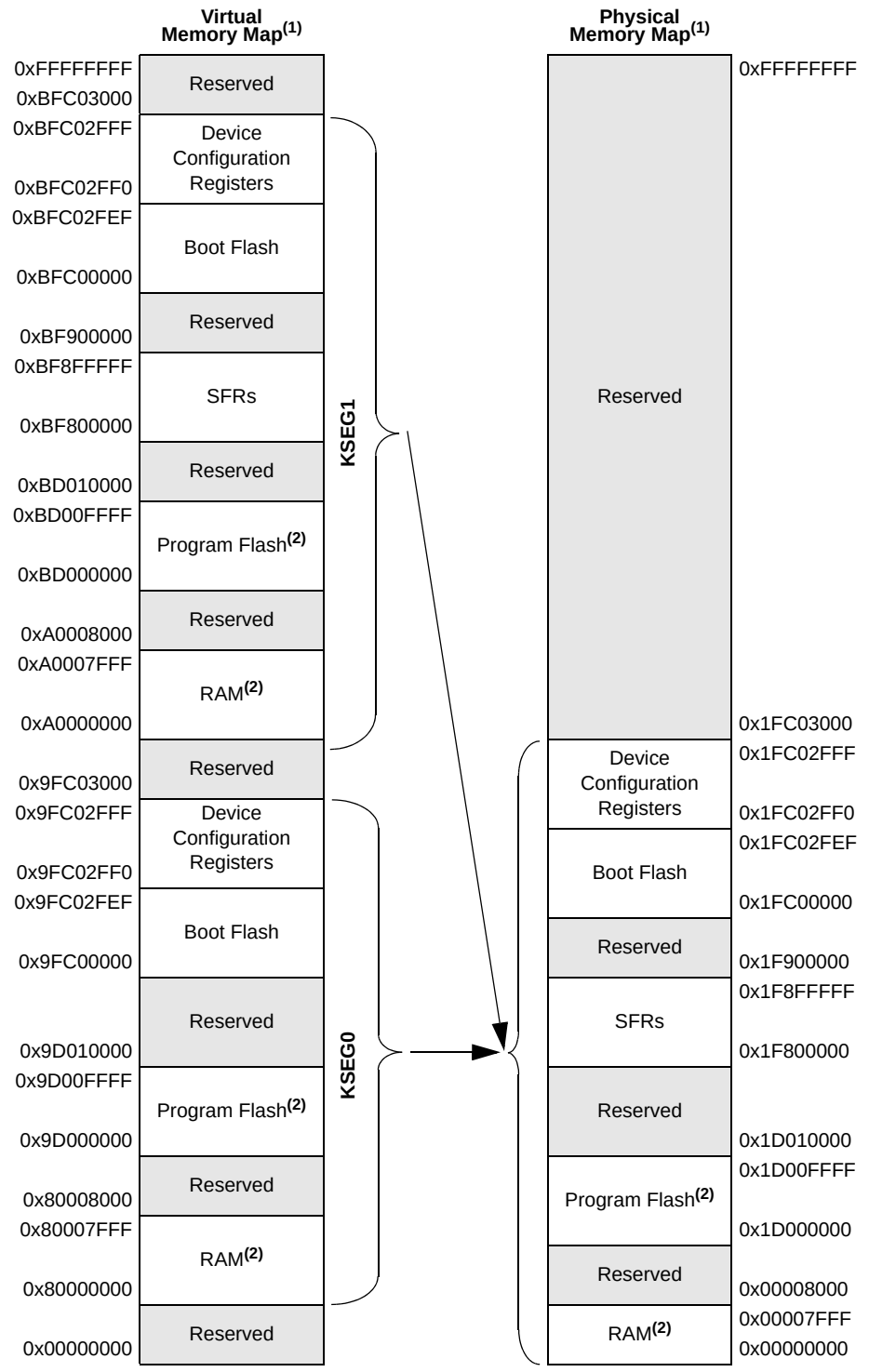

Note 1: Memory areas are not shown to scale.

2: The size of this memory region is programmable (see **Section 3. "Memory Organization"** (DS60001115)) and can be changed by initialization code provided by end user development tools (refer to the specific development tool documentation for information).

© 2009-2013 Microchip Technology Inc.

FIGURE 4-2: MEMORY MAP ON RESET FOR PIC32MX534F064H AND PIC32MX534F064L DEVICES

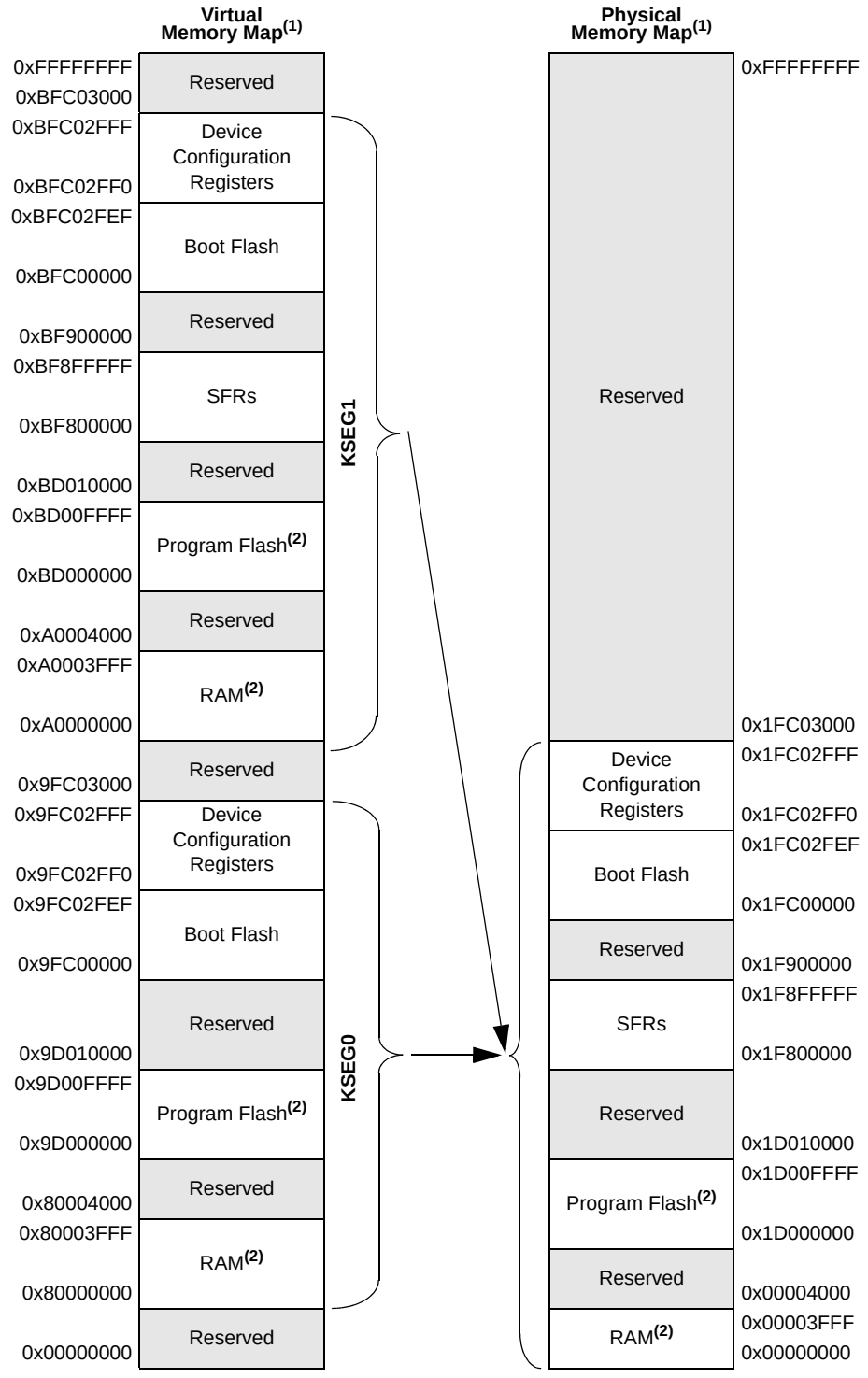

Note 1: Memory areas are not shown to scale.

2: The size of this memory region is programmable (see **Section 3. "Memory Organization"** (DS60001115)) and can be changed by initialization code provided by end user development tools (refer to the specific development tool documentation for information).

FIGURE 4-3: MEMORY MAP ON RESET FOR PIC32MX564F128H, PIC32MX564F128L, PIC32MX664F128H, PIC32MX664F128L, PIC32MX764F128H AND PIC32MX764F128L DEVICES

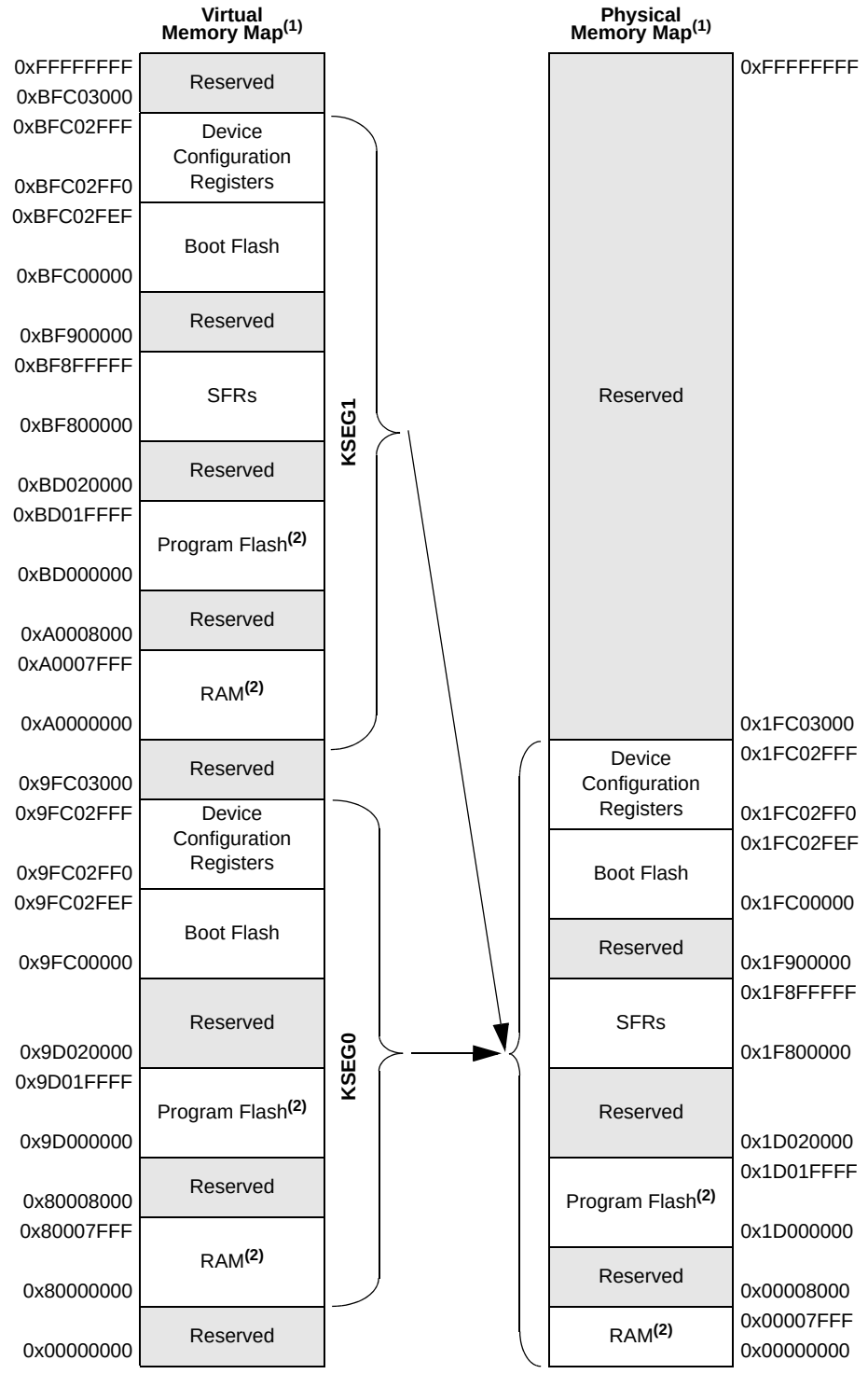

Note 1: Memory areas are not shown to scale.

2: The size of this memory region is programmable (see **Section 3. "Memory Organization"** (DS60001115)) and can be changed by initialization code provided by end user development tools (refer to the specific development tool documentation for information).

© 2009-2013 Microchip Technology Inc.

FIGURE 4-4: MEMORY MAP ON RESET FOR PIC32MX575F256H, PIC32MX575F256L, PIC32MX675F256H, PIC32MX675F256L, PIC32MX775F256H AND PIC32MX775F256L DEVICES

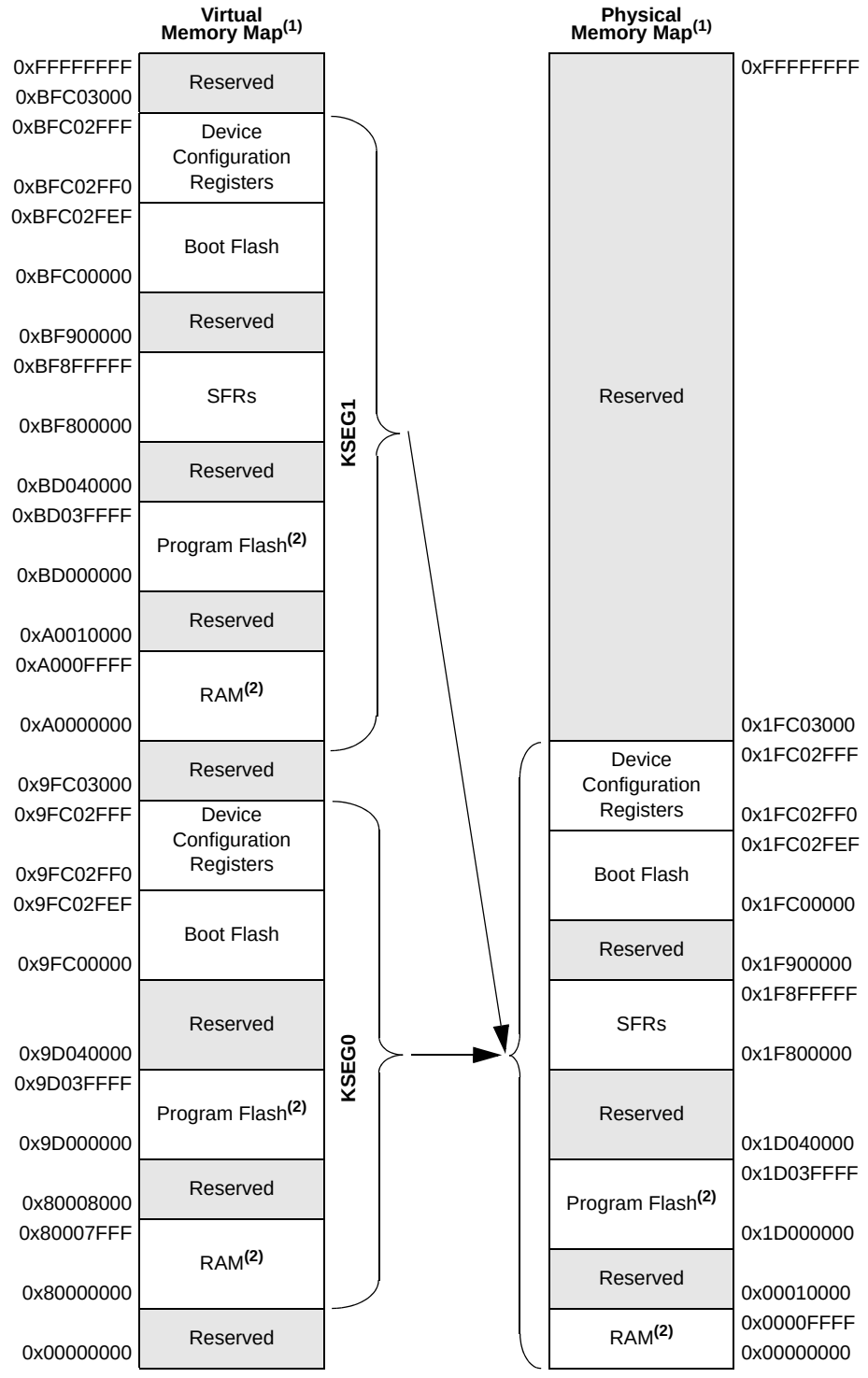

Note 1: Memory areas are not shown to scale.

2: The size of this memory region is programmable (see **Section 3. "Memory Organization"** (DS60001115)) and can be changed by initialization code provided by end user development tools (refer to the specific development tool documentation for information).

FIGURE 4-5: MEMORY MAP ON RESET FOR PIC32MX575F512H, PIC32MX575F512L, PIC32MX675F512H, PIC32MX675F512L, PIC32MX775F512H AND PIC32MX775F512L DEVICES

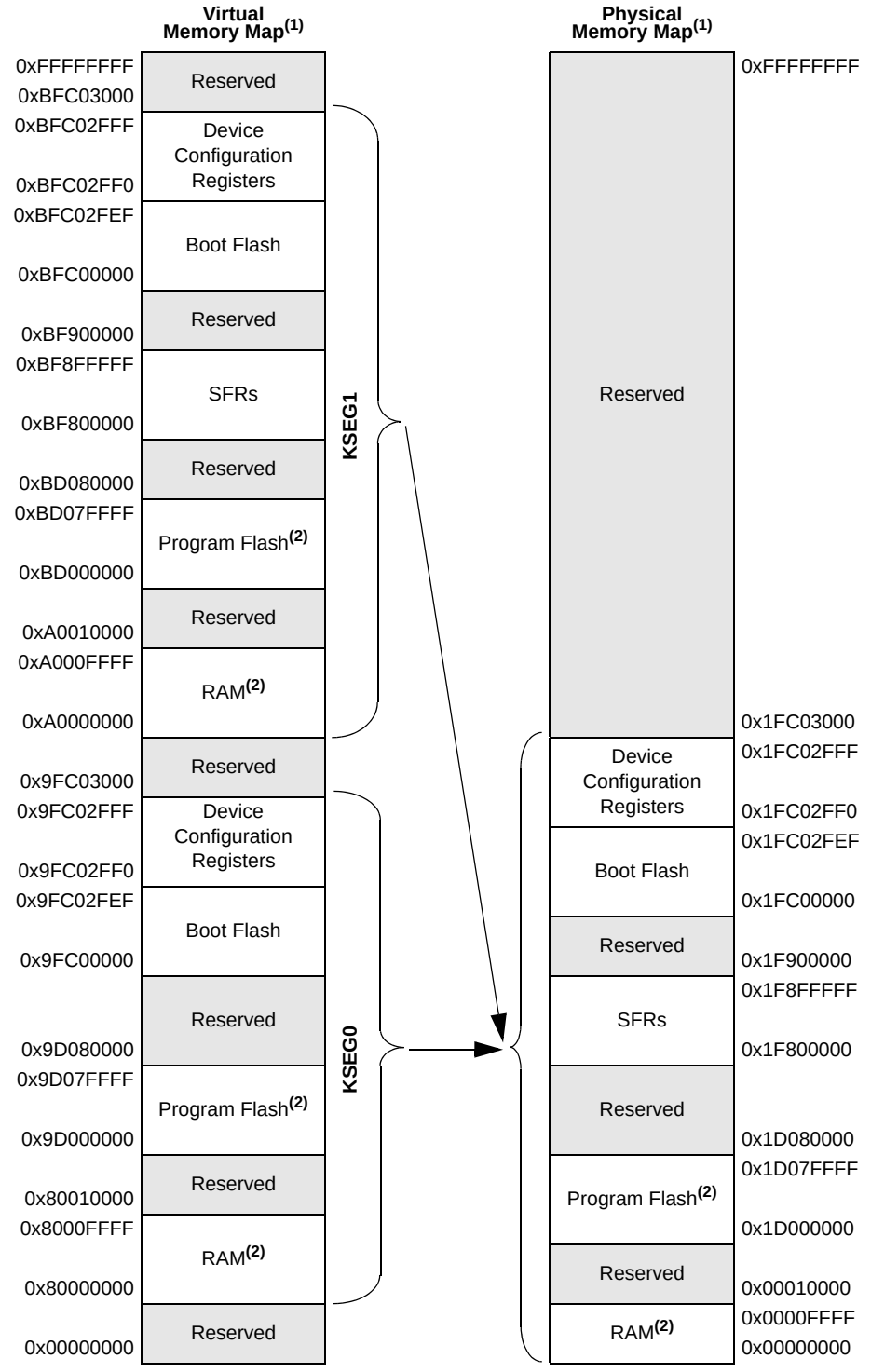

Note 1: Memory areas are not shown to scale.

2: The size of this memory region is programmable (see **Section 3. "Memory Organization"** (DS60001115)) and can be changed by initialization code provided by end user development tools (refer to the specific development tool documentation for information).

© 2009-2013 Microchip Technology Inc.

FIGURE 4-6: MEMORY MAP ON RESET FOR PIC32MX695F512H, PIC32MX695F512L, PIC32MX795F512H AND PIC32MX795F512L DEVICES

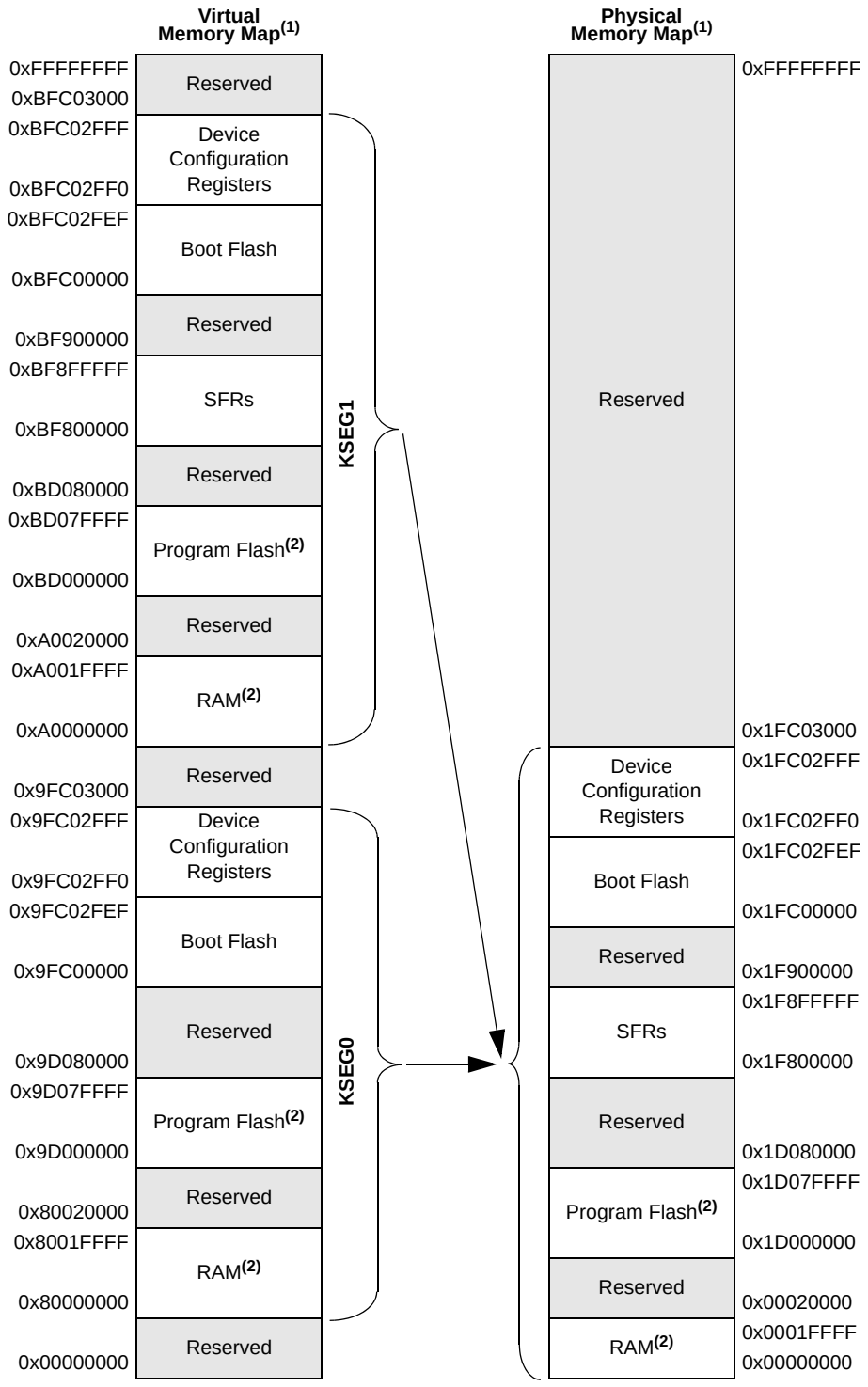

Note 1: Memory areas are not shown to scale.

2: The size of this memory region is programmable (see **Section 3. "Memory Organization"** (DS60001115)) and can be changed by initialization code provided by end user development tools (refer to the specific development tool documentation for information).

TABLE 4-1: BUS MATRIX REGISTER MAP

Virtual Address (BF88_#)	Register Name	Bit Range	Bits 31/15	30/14	29/13	28/12	27/11	26/10	25/9	24/8	23/7	22/6	21/5	20/4	19/3	18/2	17/1	16/0	All Resets
2000	BMXCON(1)	31:16	—	—	—	—	—	BMXCHEDMA	—	—	—	—	—	BMXERRIXI	BMXERRICD	BMXERRDMA	BMXERRDS	BMXERRIS	001F
		15:0	—	—	—	—	—	—	—	—	—	BMXWSDRM	—	—	—	BMXARB<2:0>			0041
2010	BMXDKPBA(1)	31:16	—	—	—	—	—	—	—	—	—	—	—	—	—	—	—	—	0000
		15:0	BMXDKPBA<15:0>																0000
2020	BMXDUDBA(1)	31:16	—	—	—	—	—	—	—	—	—	—	—	—	—	—	—	—	0000
		15:0	BMXDUDBA<15:0>																0000
2030	BMXDUPBA(1)	31:16	—	—	—	—	—	—	—	—	—	—	—	—	—	—	—	—	0000
		15:0	BMXDUPBA<15:0>																0000
2040	BMXDRMSZ	31:16	BMXDRMSZ<31:0>																xxxx
		15:0																	xxxx
2050	BMXPUPBA(1)	31:16	—	—	—	—	—	—	—	—	—	—	—	—	BMXPUPBA<19:16>				0000
		15:0	BMXPUPBA<15:0>																0000
2060	BMXPFMSZ	31:16	BMXPFMSZ<31:0>																xxxx
		15:0																	xxxx
2070	BMXBOOTSZ	31:16	BMXBOOTSZ<31:0>																0000
		15:0																	3000

Legend: x = unknown value on Reset; — = unimplemented, read as '0'. Reset values are shown in hexadecimal.

Note 1: This register has corresponding CLR, SET and INV registers at its virtual address, plus an offset of 0x4, 0x8 and 0xC, respectively. See **Section 12.1.1 "CLR, SET and INV Registers"** for more information.

© 2009-2013 Microchip Technology Inc.

TABLE 4-2: INTERRUPT REGISTER MAP FOR PIC32MX534F064H, PIC32MX564F064H, PIC32MX564F128H, PIC32MX575F256H AND PIC32MX575F512H DEVICES

Virtual Address (BF88_#)	Register Name[1]	Bit Range	Bits																All Resets
			31/15	30/14	29/13	28/12	27/11	26/10	25/9	24/8	23/7	22/6	21/5	20/4	19/3	18/2	17/1	16/0	
1000	INTCON	31:16	—	—	—	—	—	—	—	—	—	—	—	—	—	—	—	SS0	0000
		15:0	—	—	—	MVEC	—	TPC<2:0>			—	—	—	INT4EP	INT3EP	INT2EP	INT1EP	INT0EP	0000
1010	INTSTAT[3]	31:16	—	—	—	—	—	—	—	—	—	—	—	—	—	—	—	—	0000
		15:0	—	—	—	—	—	SRIPL<2:0>			—	—	VEC<5:0>						0000
1020	IPTMR	31:16	IPTMR<31:0>																0000
		15:0																	0000
1030	IFS0	31:16	I2C1MIF	I2C1SIF	I2C1BIF	U1TXIF SPI3TXIF I2C3MIF	U1RXIF SPI3RXIF I2C3SIF	U1EIF SPI3EIF I2C3BIF	—	—	—	OC5IF	IC5IF	T5IF	INT4IF	OC4IF	IC4IF	T4IF	0000
		15:0	INT3IF	OC3IF	IC3IF	T3IF	INT2IF	OC2IF	IC2IF	T2IF	INT1IF	OC1IF	IC1IF	T1IF	INT0IF	CS1IF	CS0IF	CTIF	0000
1040	IFS1	31:16	IC3EIF	IC2EIF	IC1EIF	—	—	CAN1IF	USBIF	FCEIF	DMA7IF[2]	DMA6IF[2]	DMA5IF[2]	DMA4IF[2]	DMA3IF	DMA2IF	DMA1IF	DMA0IF	0000
		15:0	RTCCIF	FSCMIF	—	—	—	U2TXIF SPI4TXIF I2C5MIF	U2RXIF SPI4RXIF I2C5SIF	U2EIF SPI4EIF I2C5BIF	U3TXIF SPI2TXIF I2C4MIF	U3RXIF SPI2RXIF I2C4SIF	U3EIF SPI2EIF I2C4BIF	CMP2IF	CMP1IF	PMPIF	AD1IF	CNIF	0000
1050	IFS2	31:16	—	—	—	—	—	—	—	—	—	—	—	—	—	—	—	—	0000
		15:0	—	—	—	—	U5TXIF	U5RXIF	U5EIF	U6TXIF	U6RXIF	U6EIF	U4TXIF	U4RXIF	U4EIF	PMPEIF	IC5EIF	IC4EIF	0000
1060	IEC0	31:16	I2C1MIE	I2C1SIE	I2C1BIE	U1TXIE SPI3TXIE I2C3MIE	U1RXIE SPI3RXIE I2C3SIE	U1EIE SPI3EIE I2C3BIE	—	—	—	OC5IE	IC5IE	T5IE	INT4IE	OC4IE	IC4IE	T4IE	0000
		15:0	INT3IE	OC3IE	IC3IE	T3IE	INT2IE	OC2IE	IC2IE	T2IE	INT1IE	OC1IE	IC1IE	T1IE	INT0IE	CS1IE	CS0IE	CTIE	0000
1070	IEC1	31:16	IC3EIE	IC2EIE	IC1EIE	—	—	CAN1IE	USBIE	FCEIE	DMA7IE[2]	DMA6IE[2]	DMA5IE[2]	DMA4IE[2]	DMA3IE	DMA2IE	DMA1IE	DMA0IE	0000
		15:0	RTCCIE	FSCMIE	—	—	—	U2TXIE SPI4TXIE I2C5MIE	U2RXIE SPI4RXIE I2C5SIE	U2EIE SPI4EIE I2C5BIE	U3TXIE SPI2TXIE I2C4MIE	U3RXIE SPI2RXIE I2C4SIE	U3EIE SPI2EIE I2C4BIE	CMP2IE	CMP1IE	PMPIE	AD1IE	CNIE	0000
1080	IEC2	31:16	—	—	—	—	—	—	—	—	—	—	—	—	—	—	—	—	0000
		15:0	—	—	—	—	U5TXIE	U5RXIE	U5EIE	U6TXIE	U6RXIE	U6EIE	U4TXIE	U4RXIE	U4EIE	PMPEIE	IC5EIE	IC4EIE	0000
1090	IPC0	31:16	—	—	—	INT0IP<2:0>			INT0IS<1:0>		—	—	—	CS1IP<2:0>			CS1IS<1:0>		0000
		15:0	—	—	—	CS0IP<2:0>			CS0IS<1:0>		—	—	—	CTIP<2:0>			CTIS<1:0>		0000
10A0	IPC1	31:16	—	—	—	INT1IP<2:0>			INT1IS<1:0>		—	—	—	OC1IP<2:0>			OC1IS<1:0>		0000
		15:0	—	—	—	IC1IP<2:0>			IC1IS<1:0>		—	—	—	T1IP<2:0>			T1IS<1:0>		0000

Legend: x = unknown value on Reset; — = unimplemented, read as '0'. Reset values are shown in hexadecimal.

Note 1: Except where noted, all registers in this table have corresponding CLR, SET and INV registers at their virtual addresses, plus offsets of 0x4 0x8 and 0xC, respectively. See **Section 12.1.1 "CLR, SET and INV Registers"** for more information.

2: These bits are not available on PIC32MX534/564/664/764 devices.

3: This register does not have associated CLR, SET, and INV registers.

© 2009-2013 Microchip Technology Inc.

TABLE 4-2: INTERRUPT REGISTER MAP FOR PIC32MX534F064H, PIC32MX564F064H, PIC32MX564F128H, PIC32MX575F256H AND PIC32MX575F512H DEVICES (CONTINUED)

Virtual Address (BF88_#)	Register Name(1)	Bit Range	Bits																All Resets
			31/15	30/14	29/13	28/12	27/11	26/10	25/9	24/8	23/7	22/6	21/5	20/4	19/3	18/2	17/1	16/0	
10B0	IPC2	31:16	—	—	—	INT2IP<2:0>			INT2IS<1:0>		—	—	—	OC2IP<2:0>			OC2IS<1:0>		0000
		15:0	—	—	—	IC2IP<2:0>			IC2IS<1:0>		—	—	—	T2IP<2:0>			T2IS<1:0>		0000
10C0	IPC3	31:16	—	—	—	INT3IP<2:0>			INT3IS<1:0>		—	—	—	OC3IP<2:0>			OC3IS<1:0>		0000
		15:0	—	—	—	IC3IP<2:0>			IC3IS<1:0>		—	—	—	T3IP<2:0>			T3IS<1:0>		0000
10D0	IPC4	31:16	—	—	—	INT4IP<2:0>			INT4IS<1:0>		—	—	—	OC4IP<2:0>			OC4IS<1:0>		0000
		15:0	—	—	—	IC4IP<2:0>			IC4IS<1:0>		—	—	—	T4IP<2:0>			T4IS<1:0>		0000
10E0	IPC5	31:16	—	—	—	—	—	—	—	—	—	—	—	OC5IP<2:0>			OC5IS<1:0>		0000
		15:0	—	—	—	IC5IP<2:0>			IC5IS<1:0>		—	—	—	T5IP<2:0>			T5IS<1:0>		0000
10F0	IPC6	31:16	—	—	—	AD1IP<2:0>			AD1IS<1:0>		—	—	—	CNIP<2:0>			CNIS<1:0>		0000
		15:0	—	—	—	I2C1IP<2:0>			I2C1IS<1:0>		—	—	—	U1IP<2:0>			U1IS<1:0>		0000
														SPI3IP<2:0>			SPI3IS<1:0>		
														I2C3IP<2:0>			I2C3IS<1:0>		
1100	IPC7	31:16	—	—	—	U3IP<2:0>			U3IS<1:0>		—	—	—	CMP2IP<2:0>			CMP2IS<1:0>		0000
						SPI2IP<2:0>			SPI2IS<1:0>										
						I2C4IP<2:0>			I2C4IS<1:0>										
		15:0	—	—	—	CMP1IP<2:0>			CMP1IS<1:0>		—	—	—	PMPIP<2:0>			PMPIS<1:0>		0000
1110	IPC8	31:16	—	—	—	RTCCIP<2:0>			RTCCIS<1:0>		—	—	—	FSCMIP<2:0>			FSCMIS<1:0>		0000
		15:0	—	—	—	—	—	—	—	—	—	—	—	U2IP<2:0>			U2IS<1:0>		0000
														SPI4IP<2:0>			SPI4IS<1:0>		
														I2C5IP<2:0>			I2C5IS<1:0>		
1120	IPC9	31:16	—	—	—	DMA3IP<2:0>			DMA3IS<1:0>		—	—	—	DMA2IP<2:0>			DMA2IS<1:0>		0000
		15:0	—	—	—	DMA1IP<2:0>			DMA1IS<1:0>		—	—	—	DMA0IP<2:0>			DMA0IS<1:0>		0000
1130	IPC10	31:16	—	—	—	DMA7IP<2:0>(2)			DMA7IS<1:0>(2)		—	—	—	DMA6IP<2:0>(2)			DMA6IS<1:0>(2)		0000
		15:0	—	—	—	DMA5IP<2:0>(2)			DMA5IS<1:0>(2)		—	—	—	DMA4IP<2:0>(2)			DMA4IS<1:0>(2)		0000
1140	IPC11	31:16	—	—	—	—	—	—	—	—	—	—	—	CAN1IP<2:0>			CAN1IS<1:0>		0000
		15:0	—	—	—	USBIP<2:0>			USBIS<1:0>		—	—	—	FCEIP<2:0>			FCEIS<1:0>		0000
1150	IPC12	31:16	—	—	—	U5IP<2:0>			U5IS<1:0>		—	—	—	U6IP<2:0>			U6IS<1:0>		0000
		15:0	—	—	—	U4IP<2:0>			U4IS<1:0>		—	—	—	—	—	—	—	—	0000

Legend: x = unknown value on Reset; — = unimplemented, read as '0'. Reset values are shown in hexadecimal.

Note 1: Except where noted, all registers in this table have corresponding CLR, SET and INV registers at their virtual addresses, plus offsets of 0x4 0x8 and 0xC, respectively. See **Section 12.1.1 "CLR, SET and INV Registers"** for more information.

2: These bits are not available on PIC32MX534/564/664/764 devices.

3: This register does not have associated CLR, SET, and INV registers.

© 2009-2013 Microchip Technology Inc.

TABLE 4-3: INTERRUPT REGISTER MAP FOR PIC32MX664F064H, PIC32MX664F128H, PIC32MX675F256H, PIC32MX675F512H AND PIC32MX695F512H DEVICES

Virtual Address (BF88_#)	Register Name(1)	Bit Range	Bits 31/15	30/14	29/13	28/12	27/11	26/10	25/9	24/8	23/7	22/6	21/5	20/4	19/3	18/2	17/1	16/0	All Resets
1000	INTCON	31:16	—	—	—	—	—	—	—	—	—	—	—	—	—	—	—	SS0	0000
		15:0	—	—	—	MVEC	—	TPC<2:0>			—	—	—	INT4EP	INT3EP	INT2EP	INT1EP	INT0EP	0000
1010	INTSTAT(3)	31:16	—	—	—	—	—	—	—	—	—	—	—	—	—	—	—	—	0000
		15:0	—	—	—	—	—	SRIPL<2:0>			—	—	VEC<5:0>						0000
1020	IPTMR	31:16	IPTMR<31:0>																0000
		15:0																	0000
1030	IFS0	31:16	I2C1MIF	I2C1SIF	I2C1BIF	U1TXIF SPI3TXIF I2C3MIF	U1RXIF SPI3RXIF I2C3SIF	U1EIF SPI3EIF I2C3BIF	—	—	—	OC5IF	IC5IF	T5IF	INT4IF	OC4IF	IC4IF	T4IF	0000
		15:0	INT3IF	OC3IF	IC3IF	T3IF	INT2IF	OC2IF	IC2IF	T2IF	INT1IF	OC1IF	IC1IF	T1IF	INT0IF	CS1IF	CS0IF	CTIF	0000
1040	IFS1	31:16	IC3EIF	IC2EIF	IC1EIF	ETHIF	—	—	USBIF	FCEIF	DMA7IF(2)	DMA6IF(2)	DMA5IF(2)	DMA4IF(2)	DMA3IF	DMA2IF	DMA1IF	DMA0IF	0000
		15:0	RTCCIF	FSCMIF	—	—	—	U2TXIF SPI4TXIF I2C5MIF	U2RXIF SPI4RXIF I2C5SIF	U2EIF SPI4EIF I2C5BIF	U3TXIF SPI2TXIF I2C4MIF	U3RXIF SPI2RXIF I2C4SIF	U3EIF SPI2EIF I2C4BIF	CMP2IF	CMP1IF	PMPIF	AD1IF	CNIF	0000
1050	IFS2	31:16	—	—			—	—	—	—	—	—	—	—	—	—	—	—	0000
		15:0	—	—	—	—	U5TXIF	U5RXIF	U5EIF	U6TXIF	U6RXIF	U6EIF	U4TXIF	U4RXIF	U4EIF	PMPEIF	IC5EIF	IC4EIF	0000
1060	IEC0	31:16	I2C1MIE	I2C1SIE	I2C1BIE	U1TXIE SPI3TXIE I2C3MIE	U1RXIE SPI3RXIE I2C3SIE	U1EIE SPI3EIE I2C3BIE	—	—	—	OC5IE	IC5IE	T5IE	INT4IE	OC4IE	IC4IE	T4IE	0000
		15:0	INT3IE	OC3IE	IC3IE	T3IE	INT2IE	OC2IE	IC2IE	T2IE	INT1IE	OC1IE	IC1IE	T1IE	INT0IE	CS1IE	CS0IE	CTIE	0000
1070	IEC1	31:16	IC3EIE	IC2EIE	IC1EIE	ETHIE	—	—	USBIE	FCEIE	DMA7IE(2)	DMA6IE(2)	DMA5IE(2)	DMA4IE(2)	DMA3IE	DMA2IE	DMA1IE	DMA0IE	0000
		15:0	RTCCIE	FSCMIE	—	—	—	U2TXIE SPI4TXIE I2C5MIE	U2RXIE SPI4RXIE I2C5SIE	U2EIE SPI4EIE I2C5BIE	U3TXIE SPI2TXIE I2C4MIE	U3RXIE SPI2RXIE I2C4SIE	U3EIE SPI2EIE I2C4BIE	CMP2IE	CMP1IE	PMPIE	AD1IE	CNIE	0000
1080	IEC2	31:16	—	—	—	—	—	—	—	—	—	—	—	—	—	—	—	—	0000
		15:0	—	—	—	—	U5TXIE	U5RXIE	U5EIE	U6TXIE	U6RXIE	U6EIE	U4TXIE	U4RXIE	U4EIE	PMPEIE	IC5EIE	IC4EIE	0000
1090	IPC0	31:16	—	—	—	INT0IP<2:0>			INT0IS<1:0>		—	—	—	CS1IP<2:0>			CS1IS<1:0>		0000
		15:0	—	—	—	CS0IP<2:0>			CS0IS<1:0>		—	—	—	CTIP<2:0>			CTIS<1:0>		0000
10A0	IPC1	31:16	—	—	—	INT1IP<2:0>			INT1IS<1:0>		—	—	—	OC1IP<2:0>			OC1IS<1:0>		0000
		15:0	—	—	—	IC1IP<2:0>			IC1IS<1:0>		—	—	—	T1IP<2:0>			T1IS<1:0>		0000
10B0	IPC2	31:16	—	—	—	INT2IP<2:0>			INT2IS<1:0>		—	—	—	OC2IP<2:0>			OC2IS<1:0>		0000
		15:0	—	—	—	IC2IP<2:0>			IC2IS<1:0>		—	—	—	T2IP<2:0>			T2IS<1:0>		0000
10C0	IPC3	31:16	—	—	—	INT3IP<2:0>			INT3IS<1:0>		—	—	—	OC3IP<2:0>			OC3IS<1:0>		0000
		15:0	—	—	—	IC3IP<2:0>			IC3IS<1:0>		—	—	—	T3IP<2:0>			T3IS<1:0>		0000

Legend: x = unknown value on Reset; — = unimplemented, read as '0'. Reset values are shown in hexadecimal.

Note 1: Except where noted, all registers in this table have corresponding CLR, SET and INV registers at their virtual addresses, plus offsets of 0x4, 0x8 and 0xC respectively. See **Section 12.1.1 "CLR, SET and INV Registers"** for more information.

2: These bits are not available on PIC32MX664 devices.

3: This register does not have associated CLR, SET, and INV registers.

© 2009-2013 Microchip Technology Inc.

TABLE 4-3: INTERRUPT REGISTER MAP FOR PIC32MX664F064H, PIC32MX664F128H, PIC32MX675F256H, PIC32MX675F512H AND PIC32MX695F512H DEVICES (CONTINUED)

Virtual Address (BF88_#)	Register Name(1)	Bit Range	Bits																All Resets
			31/15	30/14	29/13	28/12	27/11	26/10	25/9	24/8	23/7	22/6	21/5	20/4	19/3	18/2	17/1	16/0	
10D0	IPC4	31:16	—	—	—	INT4IP<2:0>			INT4IS<1:0>		—	—	—	OC4IP<2:0>			OC4IS<1:0>		0000
		15:0	—	—	—	IC4IP<2:0>			IC4IS<1:0>		—	—	—	T4IP<2:0>			T4IS<1:0>		0000
10E0	IPC5	31:16	—	—	—	—	—	—	—	—	—	—	—	OC5IP<2:0>			OC5IS<1:0>		0000
		15:0	—	—	—	IC5IP<2:0>			IC5IS<1:0>		—	—	—	T5IP<2:0>			T5IS<1:0>		0000
10F0	IPC6	31:16	—	—	—	AD1IP<2:0>			AD1IS<1:0>		—	—	—	CNIP<2:0>			CNIS<1:0>		0000
		15:0	—	—	—	I2C1IP<2:0>			I2C1IS<1:0>		—	—	—	U1IP<2:0>			U1IS<1:0>		0000
														SPI3IP<2:0>			SPI3IS<1:0>		
														I2C3IP<2:0>			I2C3IS<1:0>		
1100	IPC7	31:16	—	—	—	U3IP<2:0>			U3IS<1:0>		—	—	—	CMP2IP<2:0>			CMP2IS<1:0>		0000
						SPI2IP<2:0>			SPI2IS<1:0>										
						I2C4IP<2:0>			I2C4IS<1:0>										
		15:0	—	—	—	CMP1IP<2:0>			CMP1IS<1:0>		—	—	—	PMPIP<2:0>			PMPIS<1:0>		0000
1110	IPC8	31:16	—	—	—	RTCCIP<2:0>			RTCCIS<1:0>		—	—	—	FSCMIP<2:0>			FSCMIS<1:0>		0000
		15:0	—	—	—	—	—	—	—	—	—	—	—	U2IP<2:0>			U2IS<1:0>		0000
														SPI4IP<2:0>			SPI4IS<1:0>		
														I2C5IP<2:0>			I2C5IS<1:0>		
1120	IPC9	31:16	—	—	—	DMA3IP<2:0>			DMA3IS<1:0>		—	—	—	DMA2IP<2:0>			DMA2IS<1:0>		0000
		15:0	—	—	—	DMA1IP<2:0>			DMA1IS<1:0>		—	—	—	DMA0IP<2:0>			DMA0IS<1:0>		0000
1130	IPC10	31:16	—	—	—	DMA7IP<2:0>(2)			DMA7IS<1:0>(2)		—	—	—	DMA6IP<2:0>(2)			DMA6IS<1:0>(2)		0000
		15:0	—	—	—	DMA5IP<2:0>(2)			DMA5IS<1:0>(2)		—	—	—	DMA4IP<2:0>(2)			DMA4IS<1:0>(2)		0000
1140	IPC11	31:16	—	—	—	—	—	—	—	—	—	—	—	—	—	—	—	—	0000
		15:0	—	—	—	USBIP<2:0>			USBIS<1:0>		—	—	—	FCEIP<2:0>			FCEIS<1:0>		0000
1150	IPC12	31:16	—	—	—	U5IP<2:0>			U5IS<1:0>		—	—	—	U6IP<2:0>			U6IS<1:0>		0000
		15:0	—	—	—	U4IP<2:0>			U4IS<1:0>		—	—	—	ETHIP<2:0>			ETHIS<1:0>		0000

Legend: x = unknown value on Reset; — = unimplemented, read as '0'. Reset values are shown in hexadecimal.

Note 1: Except where noted, all registers in this table have corresponding CLR, SET and INV registers at their virtual addresses, plus offsets of 0x4, 0x8 and 0xC respectively. See **Section 12.1.1 "CLR, SET and INV Registers"** for more information.

2: These bits are not available on PIC32MX664 devices.

3: This register does not have associated CLR, SET, and INV registers.

© 2009-2013 Microchip Technology Inc.

TABLE 4-4: INTERRUPT REGISTER MAP FOR PIC32MX764F128H, PIC32MX775F256H, PIC32MX775F512H AND PIC32MX795F512H DEVICES

Virtual Address (BF88_#)	Register Name(1)	Bit Range	Bits 31/15	30/14	29/13	28/12	27/11	26/10	25/9	24/8	23/7	22/6	21/5	20/4	19/3	18/2	17/1	16/0	All Resets
1000	INTCON	31:16	—	—	—	—	—	—	—	—	—	—	—	—	—	—	—	SS0	0000
		15:0	—	—	—	MVEC	—	TPC<2:0>			—	—	—	INT4EP	INT3EP	INT2EP	INT1EP	INT0EP	0000
1010	INTSTAT(3)	31:16	—	—	—	—	—	—	—	—	—	—	—	—	—	—	—	—	0000
		15:0	—	—	—	—	—	SRIPL<2:0>			—	—	VEC<5:0>						0000
1020	IPTMR	31:16	IPTMR<31:0>																0000
		15:0																	0000
1030	IFS0	31:16	I2C1MIF	I2C1SIF	I2C1BIF	U1TXIF	U1RXIF	U1EIF	—	—	—	OC5IF	IC5IF	T5IF	INT4IF	OC4IF	IC4IF	T4IF	0000
						SPI3TXIF	SPI3RXIF	SPI3EIF											
						I2C3MIF	I2C3SIF	I2C3BIF											
		15:0	INT3IF	OC3IF	IC3IF	T3IF	INT2IF	OC2IF	IC2IF	T2IF	INT1IF	OC1IF	IC1IF	T1IF	INT0IF	CS1IF	CS0IF	CTIF	0000
1040	IFS1	31:16	IC3EIF	IC2EIF	IC1EIF	ETHIF	CAN2IF(2)	CAN1IF	USBIF	FCEIF	DMA7IF(2)	DMA6IF(2)	DMA5IF(2)	DMA4IF(2)	DMA3IF	DMA2IF	DMA1IF	DMA0IF	0000
		15:0	RTCCIF	FSCMIF	—	—	—	U2TXIF	U2RXIF	U2EIF	U3TXIF	U3RXIF	U3EIF	CMP2IF	CMP1IF	PMPIF	AD1IF	CNIF	0000
								SPI4TXIF	SPI4RXIF	SPI4EIF	SPI2TXIF	SPI2RXIF	SPI2EIF						
								I2C5MIF	I2C5SIF	I2C5BIF	I2C4MIF	I2C4SIF	I2C4BIF						
1050	IFS2	31:16	—	—	—	—	—	—	—	—	—	—	—	—	—	—	—	—	0000
		15:0	—	—	—	—	U5TXIF	U5RXIF	U5EIF	U6TXIF	U6RXIF	U6EIF	U4TXIF	U4RXIF	U4EIF	PMPEIF	IC5EIF	IC4EIF	0000
1060	IEC0	31:16	I2C1MIE	I2C1SIE	I2C1BIE	U1TXIE	U1RXIE	U1EIE	—	—	—	OC5IE	IC5IE	T5IE	INT4IE	OC4IE	IC4IE	T4IE	0000
						SPI3TXIE	SPI3RXIE	SPI3EIE											
						I2C3MIE	I2C3SIE	I2C3BIE											
		15:0	INT3IE	OC3IE	IC3IE	T3IE	INT2IE	OC2IE	IC2IE	T2IE	INT1IE	OC1IE	IC1IE	T1IE	INT0IE	CS1IE	CS0IE	CTIE	0000
1070	IEC1	31:16	IC3EIE	IC2EIE	IC1EIE	ETHIE	CAN2IE(2)	CAN1IE	USBIE	FCEIE	DMA7IE(2)	DMA6IE(2)	DMA5IE(2)	DMA4IE(2)	DMA3IE	DMA2IE	DMA1IE	DMA0IE	0000
		15:0	RTCCIE	FSCMIE	—	—	—	U2TXIE	U2RXIE	U2EIE	U3TXIE	U3RXIE	U3EIE	CMP2IE	CMP1IE	PMPIE	AD1IE	CNIE	0000
								SPI4TXIE	SPI4RXIE	SPI4EIE	SPI2TXIE	SPI2RXIE	SPI2EIE						
								I2C5MIE	I2C5SIE	I2C5BIE	I2C4MIE	I2C4SIE	I2C4BIE						
1080	IEC2	31:16	—	—	—	—	—	—	—	—	—	—	—	—	—	—	—	—	0000
		15:0	—	—	—	—	U5TXIE	U5RXIE	U5EIE	U6TXIE	U6RXIE	U6EIE	U4TXIE	U4RXIE	U4EIE	PMPEIE	IC5EIE	IC4EIE	0000
1090	IPC0	31:16	—	—	—	INT0IP<2:0>			INT0IS<1:0>		—	—	—	CS1IP<2:0>			CS1IS<1:0>		0000
		15:0	—	—	—	CS0IP<2:0>			CS0IS<1:0>		—	—	—	CTIP<2:0>			CTIS<1:0>		0000
10A0	IPC1	31:16	—	—	—	INT1IP<2:0>			INT1IS<1:0>		—	—	—	OC1IP<2:0>			OC1IS<1:0>		0000
		15:0	—	—	—	IC1IP<2:0>			IC1IS<1:0>		—	—	—	T1IP<2:0>			T1IS<1:0>		0000
10B0	IPC2	31:16	—	—	—	INT2IP<2:0>			INT2IS<1:0>		—	—	—	OC2IP<2:0>			OC2IS<1:0>		0000
		15:0	—	—	—	IC2IP<2:0>			IC2IS<1:0>		—	—	—	T2IP<2:0>			T2IS<1:0>		0000
10C0	IPC3	31:16	—	—	—	INT3IP<2:0>			INT3IS<1:0>		—	—	—	OC3IP<2:0>			OC3IS<1:0>		0000
		15:0	—	—	—	IC3IP<2:0>			IC3IS<1:0>		—	—	—	T3IP<2:0>			T3IS<1:0>		0000

Legend: x = unknown value on Reset; — = unimplemented, read as '0'. Reset values are shown in hexadecimal.

Note 1: Except where noted, all registers in this table have corresponding CLR, SET and INV registers at their virtual addresses, plus offsets of 0x4, 0x8 and 0xC, respectively. See **Section 12.1.1 "CLR, SET and INV Registers"** for more information.

2: This bit is unimplemented on PIC32MX764F128H device.

3: This register does not have associated CLR, SET, and INV registers.

© 2009-2013 Microchip Technology Inc.

TABLE 4-4: INTERRUPT REGISTER MAP FOR PIC32MX764F128H, PIC32MX775F256H, PIC32MX775F512H AND PIC32MX795F512H DEVICES (CONTINUED)

Virtual Address (BF88_#)	Register Name(1)	Bit Range	Bits																All Resets
			31/15	30/14	29/13	28/12	27/11	26/10	25/9	24/8	23/7	22/6	21/5	20/4	19/3	18/2	17/1	16/0	
10D0	IPC4	31:16	—	—	—	INT4IP<2:0>			INT4IS<1:0>		—	—	—	OC4IP<2:0>			OC4IS<1:0>		0000
		15:0	—	—	—	IC4IP<2:0>			IC4IS<1:0>		—	—	—	T4IP<2:0>			T4IS<1:0>		0000
10E0	IPC5	31:16	—	—	—	—	—	—	—	—	—	—	—	OC5IP<2:0>			OC5IS<1:0>		0000
		15:0	—	—	—	IC5IP<2:0>			IC5IS<1:0>		—	—	—	T5IP<2:0>			T5IS<1:0>		0000
10F0	IPC6	31:16	—	—	—	AD1IP<2:0>			AD1IS<1:0>		—	—	—	CNIP<2:0>			CNIS<1:0>		0000
		15:0	—	—	—	I2C1IP<2:0>			I2C1IS<1:0>		—	—	—	U1IP<2:0>			U1IS<1:0>		0000
														SPI3IP<2:0>			SPI3IS<1:0>		
														I2C3IP<2:0>			I2C3IS<1:0>		
1100	IPC7	31:16	—	—	—	U3IP<2:0>			U3IS<1:0>		—	—	—	CMP2IP<2:0>			CMP2IS<1:0>		0000
						SPI2IP<2:0>			SPI2IS<1:0>										
						I2C4IP<2:0>			I2C4IS<1:0>										
		15:0	—	—	—	CMP1IP<2:0>			CMP1IS<1:0>		—	—	—	PMPIP<2:0>			PMPIS<1:0>		0000
1110	IPC8	31:16	—	—	—	RTCCIP<2:0>			RTCCIS<1:0>		—	—	—	FSCMIP<2:0>			FSCMIS<1:0>		0000
		15:0	—	—	—	—	—	—	—	—	—	—	—	U2IP<2:0>			U2IS<1:0>		0000
														SPI4IP<2:0>			SPI4IS<1:0>		
														I2C5IP<2:0>			I2C5IS<1:0>		
1120	IPC9	31:16	—	—	—	DMA3IP<2:0>			DMA3IS<1:0>		—	—	—	DMA2IP<2:0>			DMA2IS<1:0>		0000
		15:0	—	—	—	DMA1IP<2:0>			DMA1IS<1:0>		—	—	—	DMA0IP<2:0>			DMA0IS<1:0>		0000
1130	IPC10	31:16	—	—	—	DMA7IP<2:0>(2)			DMA7IS<1:0>(2)		—	—	—	DMA6IP<2:0>(2)			DMA6IS<1:0>(2)		0000
		15:0	—	—	—	DMA5IP<2:0>(2)			DMA5IS<1:0>(2)		—	—	—	DMA4IP<2:0>(2)			DMA4IS<1:0>(2)		0000
1140	IPC11	31:16	—	—	—	CAN2IP<2:0>(2)			CAN2IS<1:0>(2)		—	—	—	CAN1IP<2:0>			CAN1IS<1:0>		0000
		15:0	—	—	—	USBIP<2:0>			USBIS<1:0>		—	—	—	FCEIP<2:0>			FCEIS<1:0>		0000
1150	IPC12	31:16	—	—	—	U5IP<2:0>			U5IS<1:0>		—	—	—	U6IP<2:0>			U6IS<1:0>		0000
		15:0	—	—	—	U4IP<2:0>			U4IS<1:0>		—	—	—	ETHIP<2:0>			ETHIS<1:0>		0000

Legend: x = unknown value on Reset; — = unimplemented, read as '0'. Reset values are shown in hexadecimal.

Note 1: Except where noted, all registers in this table have corresponding CLR, SET and INV registers at their virtual addresses, plus offsets of 0x4, 0x8 and 0xC, respectively. See **Section 12.1.1 "CLR, SET and INV Registers"** for more information.

2: This bit is unimplemented on PIC32MX764F128H device.

3: This register does not have associated CLR, SET, and INV registers.

© 2009-2013 Microchip Technology Inc.

TABLE 4-5: INTERRUPT REGISTER MAP FOR PIC32MX534F064L, PIC32MX564F064L, PIC32MX564F128L PIC32MX575F512L AND PIC32MX575F256L DEVICES

Virtual Address (BF88_#)	Register Name[1]	Bit Range	Bits																All Resets
			31/15	30/14	29/13	28/12	27/11	26/10	25/9	24/8	23/7	22/6	21/5	20/4	19/3	18/2	17/1	16/0	
1000	INTCON	31:16	—	—	—	—	—	—	—	—	—	—	—	—	—	—	—	SS0	0000
		15:0	—	—	—	MVEC	—	TPC<2:0>			—	—	—	INT4EP	INT3EP	INT2EP	INT1EP	INT0EP	0000
1010	INTSTAT[3]	31:16	—	—	—	—	—	—	—	—	—	—	—	—	—	—	—	—	0000
		15:0	—	—	—	—	—	SRIPL<2:0>			—	—	VEC<5:0>						0000
1020	IPTMR	31:16	IPTMR<31:0>																0000
		15:0																	0000
1030	IFS0	31:16	I2C1MIF	I2C1SIF	I2C1BIF	U1TXIF SPI3TXIF I2C3MIF	U1RXIF SPI3RXIF I2C3SIF	U1EIF SPI3EIF I2C3BIF	SPI1TXIF	SPI1RXIF	SPI1EIF	OC5IF	IC5IF	T5IF	INT4IF	OC4IF	IC4IF	T4IF	0000
		15:0	INT3IF	OC3IF	IC3IF	T3IF	INT2IF	OC2IF	IC2IF	T2IF	INT1IF	OC1IF	IC1IF	T1IF	INT0IF	CS1IF	CS0IF	CTIF	0000
1040	IFS1	31:16	IC3EIF	IC2EIF	IC1EIF	—	—	CAN1IF	USBIF	FCEIF	DMA7IF[2]	DMA6IF[2]	DMA5IF[2]	DMA4IF[2]	DMA3IF	DMA2IF	DMA1IF	DMA0IF	0000
		15:0	RTCCIF	FSCMIF	I2C2MIF	I2C2SIF	I2C2BIF	U2TXIF SPI4TXIF I2C5MIF	U2RXIF SPI4RXIF I2C5SIF	U2EIF SPI4EIF I2C5BIF	U3TXIF SPI2TXIF I2C4MIF	U3RXIF SPI2RXIF I2C4SIF	U3EIF SPI2EIF I2C4BIF	CMP2IF	CMP1IF	PMPIF	AD1IF	CNIF	0000
1050	IFS2	31:16	—	—	—	—	—	—	—	—	—	—	—	—	—	—	—	—	0000
		15:0	—	—	—	—	U5TXIF	U5RXIF	U5EIF	U6TXIF	U6RXIF	U6EIF	U4TXIF	U4RXIF	U4EIF	PMPEIF	IC5EIF	IC4EIF	0000
1060	IEC0	31:16	I2C1MIE	I2C1SIE	I2C1BIE	U1TXIE SPI3TXIE I2C3MIE	U1RXIE SPI3RXIE I2C3SIE	U1EIE SPI3EIE I2C3BIE	SPI1TXIE	SPI1RXIE	SPI1EIE	OC5IE	IC5IE	T5IE	INT4IE	OC4IE	IC4IE	T4IE	0000
		15:0	INT3IE	OC3IE	IC3IE	T3IE	INT2IE	OC2IE	IC2IE	T2IE	INT1IE	OC1IE	IC1IE	T1IE	INT0IE	CS1IE	CS0IE	CTIE	0000
1070	IEC1	31:16	IC3EIE	IC2EIE	IC1EIE	—	—	CAN1IE	USBIE	FCEIE	DMA7IE[2]	DMA6IE[2]	DMA5IE[2]	DMA4IE[2]	DMA3IE	DMA2IE	DMA1IE	DMA0IE	0000
		15:0	RTCCIE	FSCMIE	I2C2MIE	I2C2SIE	I2C2BIE	U2TXIE SPI4TXIE I2C5MIE	U2RXIE SPI4RXIE I2C5SIE	U2EIE SPI4EIE I2C5BIE	U3TXIE SPI2TXIE I2C4MIE	U3RXIE SPI2RXIE I2C4SIE	U3EIE SPI2EIE I2C4BIE	CMP2IE	CMP1IE	PMPIE	AD1IE	CNIE	0000
1080	IEC2	31:16	—	—	—	—	—	—	—	—	—	—	—	—	—	—	—	—	0000
		15:0	—	—	—	—	U5TXIE	U5RXIE	U5EIE	U6TXIE	U6RXIE	U6EIE	U4TXIE	U4RXIE	U4EIE	PMPEIE	IC5EIE	IC4EIE	0000
1090	IPC0	31:16	—	—	—	INT0IP<2:0>			INT0IS<1:0>		—	—	—	CS1IP<2:0>			CS1IS<1:0>		0000
		15:0	—	—	—	CS0IP<2:0>			CS0IS<1:0>		—	—	—	CTIP<2:0>			CTIS<1:0>		0000
10A0	IPC1	31:16	—	—	—	INT1IP<2:0>			INT1IS<1:0>		—	—	—	OC1IP<2:0>			OC1IS<1:0>		0000
		15:0	—	—	—	IC1IP<2:0>			IC1IS<1:0>		—	—	—	T1IP<2:0>			T1IS<1:0>		0000
10B0	IPC2	31:16	—	—	—	INT2IP<2:0>			INT2IS<1:0>		—	—	—	OC2IP<2:0>			OC2IS<1:0>		0000
		15:0	—	—	—	IC2IP<2:0>			IC2IS<1:0>		—	—	—	T2IP<2:0>			T2IS<1:0>		0000
10C0	IPC3	31:16	—	—	—	INT3IP<2:0>			INT3IS<1:0>		—	—	—	OC3IP<2:0>			OC3IS<1:0>		0000
		15:0	—	—	—	IC3IP<2:0>			IC3IS<1:0>		—	—	—	T3IP<2:0>			T3IS<1:0>		0000

Legend: x = unknown value on Reset; — = unimplemented, read as '0'. Reset values are shown in hexadecimal.

Note 1: Except where noted, all registers in this table have corresponding CLR, SET and INV registers at their virtual addresses, plus offsets of 0x4, 0x8 and 0xC, respectively. See **Section 12.1.1 "CLR, SET and INV Registers"** for more information.

2: These bits are not available on PIC32MX534/564 devices.

3: This register does not have associated CLR, SET, and INV registers.

© 2009-2013 Microchip Technology Inc.

TABLE 4-5: INTERRUPT REGISTER MAP FOR PIC32MX534F064L, PIC32MX564F064L, PIC32MX564F128L PIC32MX575F512L AND PIC32MX575F256L DEVICES (CONTINUED)

Virtual Address (BF88_#)	Register Name(1)	Bit Range	Bits																All Resets
			31/15	30/14	29/13	28/12	27/11	26/10	25/9	24/8	23/7	22/6	21/5	20/4	19/3	18/2	17/1	16/0	
10D0	IPC4	31:16	—	—	—	INT4IP<2:0>			INT4IS<1:0>		—	—	—	OC4IP<2:0>			OC4IS<1:0>		0000
		15:0	—	—	—	IC4IP<2:0>			IC4IS<1:0>		—	—	—	T4IP<2:0>			T4IS<1:0>		0000
10E0	IPC5	31:16	—	—	—	SPI1IP<2:0>			SPI1IS<1:0>		—	—	—	OC5IP<2:0>			OC5IS<1:0>		0000
		15:0	—	—	—	IC5IP<2:0>			IC5IS<1:0>		—	—	—	T5IP<2:0>			T5IS<1:0>		0000
10F0	IPC6	31:16	—	—	—	AD1IP<2:0>			AD1IS<1:0>		—	—	—	CNIP<2:0>			CNIS<1:0>		0000
		15:0	—	—	—	I2C1IP<2:0>			I2C1IS<1:0>		—	—	—	U1IP<2:0>			U1IS<1:0>		0000
														SPI3IP<2:0>			SPI3IS<1:0>		
														I2C3IP<2:0>			I2C3IS<1:0>		
1100	IPC7	31:16	—	—	—	U3IP<2:0>			U3IS<1:0>		—	—	—	CMP2IP<2:0>			CMP2IS<1:0>		0000
						SPI2IP<2:0>			SPI2IS<1:0>										
						I2C4IP<2:0>			I2C4IS<1:0>										
		15:0	—	—	—	CMP1IP<2:0>			CMP1IS<1:0>		—	—	—	PMPIP<2:0>			PMPIS<1:0>		0000
1110	IPC8	31:16	—	—	—	RTCCIP<2:0>			RTCCIS<1:0>		—	—	—	FSCMIP<2:0>			FSCMIS<1:0>		0000
		15:0	—	—	—	I2C2IP<2:0>			I2C2IS<1:0>		—	—	—	U2IP<2:0>			U2IS<1:0>		0000
														SPI4IP<2:0>			SPI4IS<1:0>		
														I2C5IP<2:0>			I2C5IS<1:0>		
1120	IPC9	31:16	—	—	—	DMA3IP<2:0>			DMA3IS<1:0>		—	—	—	DMA2IP<2:0>			DMA2IS<1:0>		0000
		15:0	—	—	—	DMA1IP<2:0>			DMA1IS<1:0>		—	—	—	DMA0IP<2:0>			DMA0IS<1:0>		0000
1130	IPC10	31:16	—	—	—	DMA7IP<2:0>(2)			DMA7IS<1:0>(2)		—	—	—	DMA6IP<2:0>(2)			DMA6IS<1:0>(2)		0000
		15:0	—	—	—	DMA5IP<2:0>(2)			DMA5IS<1:0>(2)		—	—	—	DMA4IP<2:0>(2)			DMA4IS<1:0>(2)		0000
1140	IPC11	31:16	—	—	—	—	—	—	—	—	—	—	—	CAN1IP<2:0>			CAN1IS<1:0>		0000
		15:0	—	—	—	USBIP<2:0>			USBIS<1:0>		—	—	—	FCEIP<2:0>			FCEIS<1:0>		0000
1150	IPC12	31:16	—	—	—	U5IP<2:0>			U5IS<1:0>		—	—	—	U6IP<2:0>			U6IS<1:0>		0000
		15:0	—	—	—	U4IP<2:0>			U4IS<1:0>		—	—	—	—	—	—	—	—	0000

Legend: x = unknown value on Reset; — = unimplemented, read as '0'. Reset values are shown in hexadecimal.

Note 1: Except where noted, all registers in this table have corresponding CLR, SET and INV registers at their virtual addresses, plus offsets of 0x4, 0x8 and 0xC, respectively. See **Section 12.1.1 "CLR, SET and INV Registers"** for more information.

2: These bits are not available on PIC32MX534/564 devices.

3: This register does not have associated CLR, SET, and INV registers.

© 2009-2013 Microchip Technology Inc.

TABLE 4-6: INTERRUPT REGISTER MAP FOR PIC32MX664F064L, PIC32MX664F128L, PIC32MX675F256L, PIC32MX675F512L AND PIC32MX695F512L DEVICES

Virtual Address (BF88_#)	Register Name(1)	Bit Range	Bits 31/15	30/14	29/13	28/12	27/11	26/10	25/9	24/8	23/7	22/6	21/5	20/4	19/3	18/2	17/1	16/0	All Resets
1000	INTCON	31:16	—	—	—	—	—	—	—	—	—	—	—	—	—	—	—	SS0	0000
		15:0	—	—	—	MVEC	—	TPC<2:0>			—	—	—	INT4EP	INT3EP	INT2EP	INT1EP	INT0EP	0000
1010	INTSTAT(3)	31:16	—	—	—	—	—	—	—	—	—	—	—	—	—	—	—	—	0000
		15:0	—	—	—	—	—	SRIPL<2:0>			—	—	VEC<5:0>						0000
1020	IPTMR	31:16	IPTMR<31:0>																0000
		15:0																	0000
1030	IFS0	31:16	I2C1MIF	I2C1SIF	I2C1BIF	U1TXIF SPI3TXIF I2C3MIF	U1RXIF SPI3RXIF I2C3SIF	U1EIF SPI3EIF I2C3BIF	SPI1TXIF	SPI1RXIF	SPI1EIF	OC5IF	IC5IF	T5IF	INT4IF	OC4IF	IC4IF	T4IF	0000
		15:0	INT3IF	OC3IF	IC3IF	T3IF	INT2IF	OC2IF	IC2IF	T2IF	INT1IF	OC1IF	IC1IF	T1IF	INT0IF	CS1IF	CS0IF	CTIF	0000
1040	IFS1	31:16	IC3EIF	IC2EIF	IC1EIF	ETHIF	—	—	USBIF	FCEIF	DMA7IF(2)	DMA6IF(2)	DMA5IF(2)	DMA4IF(2)	DMA3IF	DMA2IF	DMA1IF	DMA0IF	0000
		15:0	RTCCIF	FSCMIF	I2C2MIF	I2C2SIF	I2C2BIF	U2TXIF SPI4TXIF I2C5MIF	U2RXIF SPI4RXIF I2C5SIF	U2EIF SPI4EIF I2C5BIF	U3TXIF SPI2TXIF I2C4MIF	U3RXIF SPI2RXIF I2C4SIF	U3EIF SPI2EIF I2C4BIF	CMP2IF	CMP1IF	PMPIF	AD1IF	CNIF	0000
1050	IFS2	31:16	—	—	—	—	—	—	—	—	—	—	—	—	—	—	—	—	0000
		15:0	—	—	—	—	U5TXIF	U5RXIF	U5EIF	U6TXIF	U6RXIF	U6EIF	U4TXIF	U4RXIF	U4EIF	PMPEIF	IC5EIF	IC4EIF	0000
1060	IEC0	31:16	I2C1MIE	I2C1SIE	I2C1BIE	U1TXIE SPI3TXIE I2C3MIE	U1RXIE SPI3RXIE I2C3SIE	U1EIE SPI3EIE I2C3BIE	SPI1TXIE	SPI1RXIE	SPI1EIE	OC5IE	IC5IE	T5IE	INT4IE	OC4IE	IC4IE	T4IE	0000
		15:0	INT3IE	OC3IE	IC3IE	T3IE	INT2IE	OC2IE	IC2IE	T2IE	INT1IE	OC1IE	IC1IE	T1IE	INT0IE	CS1IE	CS0IE	CTIE	0000
1070	IEC1	31:16	IC3EIE	IC2EIE	IC1EIE	ETHIE	—	—	USBIE	FCEIE	DMA7IE(2)	DMA6IE(2)	DMA5IE(2)	DMA4IE(2)	DMA3IE	DMA2IE	DMA1IE	DMA0IE	0000
		15:0	RTCCIE	FSCMIE	I2C2MIE	I2C2SIE	I2C2BIE	U2TXIE SPI4TXIE I2C5MIE	U2RXIE SPI4RXIE I2C5SIE	U2EIE SPI4EIE I2C5BIE	U3TXIE SPI2TXIE I2C4MIE	U3RXIE SPI2RXIE I2C4SIE	U3EIE SPI2EIE I2C4BIE	CMP2IE	CMP1IE	PMPIE	AD1IE	CNIE	0000
1080	IEC2	31:16	—	—	—	—	—	—	—	—	—	—	—	—	—	—	—	—	0000
		15:0	—	—	—	—	U5TXIE	U5RXIE	U5EIE	U6TXIE	U6RXIE	U6EIE	U4TXIE	U4RXIE	U4EIE	PMPEIE	IC5EIE	IC4EIE	0000
1090	IPC0	31:16	—	—	—	INT0IP<2:0>			INT0IS<1:0>		—	—	—	CS1IP<2:0>			CS1IS<1:0>		0000
		15:0	—	—	—	CS0IP<2:0>			CS0IS<1:0>		—	—	—	CTIP<2:0>			CTIS<1:0>		0000
10A0	IPC1	31:16	—	—	—	INT1IP<2:0>			INT1IS<1:0>		—	—	—	OC1IP<2:0>			OC1IS<1:0>		0000
		15:0	—	—	—	IC1IP<2:0>			IC1IS<1:0>		—	—	—	T1IP<2:0>			T1IS<1:0>		0000
10B0	IPC2	31:16	—	—	—	INT2IP<2:0>			INT2IS<1:0>		—	—	—	OC2IP<2:0>			OC2IS<1:0>		0000
		15:0	—	—	—	IC2IP<2:0>			IC2IS<1:0>		—	—	—	T2IP<2:0>			T2IS<1:0>		0000
10C0	IPC3	31:16	—	—	—	INT3IP<2:0>			INT3IS<1:0>		—	—	—	OC3IP<2:0>			OC3IS<1:0>		0000
		15:0	—	—	—	IC3IP<2:0>			IC3IS<1:0>		—	—	—	T3IP<2:0>			T3IS<1:0>		0000

Legend: x = unknown value on Reset; — = unimplemented, read as '0'. Reset values are shown in hexadecimal.

Note 1: Except where noted, all registers in this table have corresponding CLR, SET and INV registers at their virtual addresses, plus offsets of 0x4, 0x8 and 0xC, respectively. See **Section 12.1.1 "CLR, SET and INV Registers"** for more information.

2: These bits are not available on PIC32MX664 devices.

3: This register does note have associated CLR, SET, and INV registers.

© 2009-2013 Microchip Technology Inc.

TABLE 4-6: INTERRUPT REGISTER MAP FOR PIC32MX664F064L, PIC32MX664F128L, PIC32MX675F256L, PIC32MX675F512L AND PIC32MX695F512L DEVICES (CONTINUED)

Virtual Address (BF88_#)	Register Name(1)	Bit Range	Bits																All Resets
			31/15	30/14	29/13	28/12	27/11	26/10	25/9	24/8	23/7	22/6	21/5	20/4	19/3	18/2	17/1	16/0	
10D0	IPC4	31:16	—	—	—	INT4IP<2:0>			INT4IS<1:0>		—	—	—	OC4IP<2:0>			OC4IS<1:0>		0000
		15:0	—	—	—	IC4IP<2:0>			IC4IS<1:0>		—	—	—	T4IP<2:0>			T4IS<1:0>		0000
10E0	IPC5	31:16	—	—	—	SPI1IP<2:0>			SPI1IS<1:0>		—	—	—	OC5IP<2:0>			OC5IS<1:0>		0000
		15:0	—	—	—	IC5IP<2:0>			IC5IS<1:0>		—	—	—	T5IP<2:0>			T5IS<1:0>		0000
10F0	IPC6	31:16	—	—	—	AD1IP<2:0>			AD1IS<1:0>		—	—	—	CNIP<2:0>			CNIS<1:0>		0000
		15:0	—	—	—	I2C1IP<2:0>			I2C1IS<1:0>		—	—	—	U1IP<2:0>			U1IS<1:0>		0000
														SPI3IP<2:0>			SPI3IS<1:0>		
														I2C3IP<2:0>			I2C3IS<1:0>		
1100	IPC7	31:16	—	—	—	U3IP<2:0>			U3IS<1:0>		—	—	—	CMP2IP<2:0>			CMP2IS<1:0>		0000
						SPI2IP<2:0>			SPI2IS<1:0>										
						I2C4IP<2:0>			I2C4IS<1:0>										
		15:0	—	—	—	CMP1IP<2:0>			CMP1IS<1:0>		—	—	—	PMPIP<2:0>			PMPIS<1:0>		0000
1110	IPC8	31:16	—	—	—	RTCCIP<2:0>			RTCCIS<1:0>		—	—	—	FSCMIP<2:0>			FSCMIS<1:0>		0000
		15:0	—	—	—	I2C2IP<2:0>			I2C2IS<1:0>		—	—	—	U2IP<2:0>			U2IS<1:0>		0000
														SPI4IP<2:0>			SPI4IS<1:0>		
														I2C5IP<2:0>			I2C5IS<1:0>		
1120	IPC9	31:16	—	—	—	DMA3IP<2:0>			DMA3IS<1:0>		—	—	—	DMA2IP<2:0>			DMA2IS<1:0>		0000
		15:0	—	—	—	DMA1IP<2:0>			DMA1IS<1:0>		—	—	—	DMA0IP<2:0>			DMA0IS<1:0>		0000
1130	IPC10	31:16	—	—	—	DMA7IP<2:0>(2)			DMA7IS<1:0>(2)		—	—	—	DMA6IP<2:0>(2)			DMA6IS<1:0>(2)		0000
		15:0	—	—	—	DMA5IP<2:0>(2)			DMA5IS<1:0>(2)		—	—	—	DMA4IP<2:0>(2)			DMA4IS<1:0>(2)		0000
1140	IPC11	31:16	—	—	—	—	—	—	—	—	—	—	—	—	—	—	—	—	0000
		15:0	—	—	—	USBIP<2:0>			USBIS<1:0>		—	—	—	FCEIP<2:0>			FCEIS<1:0>		0000
1150	IPC12	31:16	—	—	—	U5IP<2:0>			U5IS<1:0>		—	—	—	U6IP<2:0>			U6IS<1:0>		0000
		15:0	—	—	—	U4IP<2:0>			U4IS<1:0>		—	—	—	ETHIP<2:0>			ETHIS<1:0>		0000

Legend: x = unknown value on Reset; — = unimplemented, read as '0'. Reset values are shown in hexadecimal.

Note 1: Except where noted, all registers in this table have corresponding CLR, SET and INV registers at their virtual addresses, plus offsets of 0x4, 0x8 and 0xC, respectively. See **Section 12.1.1 "CLR, SET and INV Registers"** for more information.

2: These bits are not available on PIC32MX664 devices.

3: This register does note have associated CLR, SET, and INV registers.

© 2009-2013 Microchip Technology Inc.

TABLE 4-7: INTERRUPT REGISTER MAP FOR PIC32MX764F128L, PIC32MX775F256L, PIC32MX775F512L AND PIC32MX795F512L DEVICES

Virtual Address (BF88_#)	Register Name[1]	Bit Range	Bits 31/15	30/14	29/13	28/12	27/11	26/10	25/9	24/8	23/7	22/6	21/5	20/4	19/3	18/2	17/1	16/0	All Resets
1000	INTCON	31:16	—	—	—	—	—	—	—	—	—	—	—	—	—	—	—	SS0	0000
		15:0	—	—	—	MVEC	—	TPC<2:0>			—	—	—	INT4EP	INT3EP	INT2EP	INT1EP	INT0EP	0000
1010	INTSTAT[3]	31:16	—	—	—	—	—	—	—	—	—	—	—	—	—	—	—	—	0000
		15:0	—	—	—	—	—	SRIPL<2:0>			—	—	VEC<5:0>						0000
1020	IPTMR	31:16	IPTMR<31:0>																0000
		15:0																	0000
1030	IFS0	31:16	I2C1MIF	I2C1SIF	I2C1BIF	U1TXIF SPI3TXIF I2C3MIF	U1RXIF SPI3RXIF I2C3SIF	U1EIF SPI3EIF I2C3BIF	SPI1TXIF	SPI1RXIF	SPI1EIF	OC5IF	IC5IF	T5IF	INT4IF	OC4IF	IC4IF	T4IF	0000
		15:0	INT3IF	OC3IF	IC3IF	T3IF	INT2IF	OC2IF	IC2IF	T2IF	INT1IF	OC1IF	IC1IF	T1IF	INT0IF	CS1IF	CS0IF	CTIF	0000
1040	IFS1	31:16	IC3EIF	IC2EIF	IC1EIF	ETHIF	CAN2IF[2]	CAN1IF	USBIF	FCEIF	DMA7IF[2]	DMA6IF[2]	DMA5IF[2]	DMA4IF[2]	DMA3IF	DMA2IF	DMA1IF	DMA0IF	0000
		15:0	RTCCIF	FSCMIF	I2C2MIF	I2C2SIF	I2C2BIF	U2TXIF SPI4TXIF I2C5MIF	U2RXIF SPI4RXIF I2C5SIF	U2EIF SPI4EIF I2C5BIF	U3TXIF SPI2TXIF I2C4MIF	U3RXIF SPI2RXIF I2C4SIF	U3EIF SPI2EIF I2C4BIF	CMP2IF	CMP1IF	PMPIF	AD1IF	CNIF	0000
1050	IFS2	31:16	—	—	—	—	—	—	—	—	—	—	—	—	—	—	—	—	0000
		15:0	—	—	—	—	U5TXIF	U5RXIF	U5EIF	U6TXIF	U6RXIF	U6EIF	U4TXIF	U4RXIF	U4EIF	PMPEIF	IC5EIF	IC4EIF	0000
1060	IEC0	31:16	I2C1MIE	I2C1SIE	I2C1BIE	U1TXIE SPI3TXIE I2C3MIE	U1RXIE SPI3RXIE I2C3SIE	U1EIE SPI3EIE I2C3BIE	SPI1TXIE	SPI1RXIE	SPI1EIE	OC5IE	IC5IE	T5IE	INT4IE	OC4IE	IC4IE	T4IE	0000
		15:0	INT3IE	OC3IE	IC3IE	T3IE	INT2IE	OC2IE	IC2IE	T2IE	INT1IE	OC1IE	IC1IE	T1IE	INT0IE	CS1IE	CS0IE	CTIE	0000
1070	IEC1	31:16	IC3EIE	IC2EIE	IC1EIE	ETHIE	CAN2IE[2]	CAN1IE	USBIE	FCEIE	DMA7IE[2]	DMA6IE[2]	DMA5IE[2]	DMA4IE[2]	DMA3IE	DMA2IE	DMA1IE	DMA0IE	0000
		15:0	RTCCIE	FSCMIE	I2C2MIE	I2C2SIE	I2C2BIE	U2TXIE SPI4TXIE I2C5MIE	U2RXIE SPI4RXIE I2C5SIE	U2EIE SPI4EIE I2C5BIE	U3TXIE SPI2TXIE I2C4MIE	U3RXIE SPI2RXIE I2C4SIE	U3EIE SPI2EIE I2C4BIE	CMP2IE	CMP1IE	PMPIE	AD1IE	CNIE	0000
1080	IEC2	31:16	—	—	—	—	—	—	—	—	—	—	—	—	—	—	—	—	0000
		15:0	—	—	—	—	U5TXIE	U5RXIE	U5EIE	U6TXIE	U6RXIE	U6EIE	U4TXIE	U4RXIE	U4EIE	PMPEIE	IC5EIE	IC4EIE	0000
1090	IPC0	31:16	—	—	—	INT0IP<2:0>			INT0IS<1:0>		—	—	—	CS1IP<2:0>			CS1IS<1:0>		0000
		15:0	—	—	—	CS0IP<2:0>			CS0IS<1:0>		—	—	—	CTIP<2:0>			CTIS<1:0>		0000
10A0	IPC1	31:16	—	—	—	INT1IP<2:0>			INT1IS<1:0>		—	—	—	OC1IP<2:0>			OC1IS<1:0>		0000
		15:0	—	—	—	IC1IP<2:0>			IC1IS<1:0>		—	—	—	T1IP<2:0>			T1IS<1:0>		0000
10B0	IPC2	31:16	—	—	—	INT2IP<2:0>			INT2IS<1:0>		—	—	—	OC2IP<2:0>			OC2IS<1:0>		0000
		15:0	—	—	—	IC2IP<2:0>			IC2IS<1:0>		—	—	—	T2IP<2:0>			T2IS<1:0>		0000
10C0	IPC3	31:16	—	—	—	INT3IP<2:0>			INT3IS<1:0>		—	—	—	OC3IP<2:0>			OC3IS<1:0>		0000
		15:0	—	—	—	IC3IP<2:0>			IC3IS<1:0>		—	—	—	T3IP<2:0>			T3IS<1:0>		0000

Legend: x = unknown value on Reset; — = unimplemented, read as '0'. Reset values are shown in hexadecimal.

Note 1: Except where noted, all registers in this table have corresponding CLR, SET and INV registers at their virtual addresses, plus offsets of 0x4, 0x8 and 0xC, respectively. See **Section 12.1.1 "CLR, SET and INV Registers"** for more information.

2: This bit is unimplemented on PIC32MX764F128L device.

3: This register does not have associated CLR, SET, and INV registers.

© 2009-2013 Microchip Technology Inc.

TABLE 4-7: INTERRUPT REGISTER MAP FOR PIC32MX764F128L, PIC32MX775F256L, PIC32MX775F512L AND PIC32MX795F512L DEVICES (CONTINUED)

Virtual Address (BF88_#)	Register Name(1)	Bit Range	Bits																All Resets
			31/15	30/14	29/13	28/12	27/11	26/10	25/9	24/8	23/7	22/6	21/5	20/4	19/3	18/2	17/1	16/0	
10D0	IPC4	31:16	—	—	—	INT4IP<2:0>			INT4IS<1:0>		—	—	—	OC4IP<2:0>			OC4IS<1:0>		0000
		15:0	—	—	—	IC4IP<2:0>			IC4IS<1:0>		—	—	—	T4IP<2:0>			T4IS<1:0>		0000
10E0	IPC5	31:16	—	—	—	SPI1IP<2:0>			SPI1IS<1:0>		—	—	—	OC5IP<2:0>			OC5IS<1:0>		0000
		15:0	—	—	—	IC5IP<2:0>			IC5IS<1:0>		—	—	—	T5IP<2:0>			T5IS<1:0>		0000
10F0	IPC6	31:16	—	—	—	AD1IP<2:0>			AD1IS<1:0>		—	—	—	CNIP<2:0>			CNIS<1:0>		0000
		15:0	—	—	—	I2C1IP<2:0>			I2C1IS<1:0>		—	—	—	U1IP<2:0>			U1IS<1:0>		0000
														SPI3IP<2:0>			SPI3IS<1:0>		
														I2C3IP<2:0>			I2C3IS<1:0>		
1100	IPC7	31:16	—	—	—	U3IP<2:0>			U3IS<1:0>		—	—	—	CMP2IP<2:0>			CMP2IS<1:0>		0000
						SPI2IP<2:0>			SPI2IS<1:0>										
						I2C4IP<2:0>			I2C4IS<1:0>										
		15:0	—	—	—	CMP1IP<2:0>			CMP1IS<1:0>		—	—	—	PMPIP<2:0>			PMPIS<1:0>		0000
1110	IPC8	31:16	—	—	—	RTCCIP<2:0>			RTCCIS<1:0>		—	—	—	FSCMIP<2:0>			FSCMIS<1:0>		0000
		15:0	—	—	—	I2C2IP<2:0>			I2C2IS<1:0>		—	—	—	U2IP<2:0>			U2IS<1:0>		0000
														SPI4IP<2:0>			SPI4IS<1:0>		
														I2C5IP<2:0>			I2C5IS<1:0>		
1120	IPC9	31:16	—	—	—	DMA3IP<2:0>			DMA3IS<1:0>		—	—	—	DMA2IP<2:0>			DMA2IS<1:0>		0000
		15:0	—	—	—	DMA1IP<2:0>			DMA1IS<1:0>		—	—	—	DMA0IP<2:0>			DMA0IS<1:0>		0000
1130	IPC10	31:16	—	—	—	DMA7IP<2:0>(2)			DMA7IS<1:0>(2)		—	—	—	DMA6IP<2:0>(2)			DMA6IS<1:0>(2)		0000
		15:0	—	—	—	DMA5IP<2:0>(2)			DMA5IS<1:0>(2)		—	—	—	DMA4IP<2:0>(2)			DMA4IS<1:0>(2)		0000
1140	IPC11	31:16	—	—	—	CAN2IP<2:0>(2)			CAN2IS<1:0>(2)		—	—	—	CAN1IP<2:0>			CAN1IS<1:0>		0000
		15:0	—	—	—	USBIP<2:0>			USBIS<1:0>		—	—	—	FCEIP<2:0>			FCEIS<1:0>		0000
1150	IPC12	31:16	—	—	—	U5IP<2:0>			U5IS<1:0>		—	—	—	U6IP<2:0>			U6IS<1:0>		0000
		15:0	—	—	—	U4IP<2:0>			U4IS<1:0>		—	—	—	ETHIP<2:0>			ETHIS<1:0>		0000

Legend: x = unknown value on Reset; — = unimplemented, read as '0'. Reset values are shown in hexadecimal.

Note 1: Except where noted, all registers in this table have corresponding CLR, SET and INV registers at their virtual addresses, plus offsets of 0x4, 0x8 and 0xC, respectively. See **Section 12.1.1 "CLR, SET and INV Registers"** for more information.

2: This bit is unimplemented on PIC32MX764F128L device.

3: This register does not have associated CLR, SET, and INV registers.

© 2009-2013 Microchip Technology Inc.

TABLE 4-8: TIMER1-TIMER5 REGISTER MAP

Virtual Address (BF80_#)	Register Name(1)	Bit Range	Bits 31/15	30/14	29/13	28/12	27/11	26/10	25/9	24/8	23/7	22/6	21/5	20/4	19/3	18/2	17/1	16/0	All Resets
0600	T1CON	31:16	—	—	—	—	—	—	—	—	—	—	—	—	—	—	—	—	0000
		15:0	ON	—	SIDL	TWDIS	TWIP	—	—	—	TGATE	—	TCKPS<1:0>		—	TSYNC	TCS	—	0000
0610	TMR1	31:16	—	—	—	—	—	—	—	—	—	—	—	—	—	—	—	—	0000
		15:0	TMR1<15:0>																0000
0620	PR1	31:16	—	—	—	—	—	—	—	—	—	—	—	—	—	—	—	—	0000
		15:0	PR1<15:0>																FFFF
0800	T2CON	31:16	—	—	—	—	—	—	—	—	—	—	—	—	—	—	—	—	0000
		15:0	ON	—	SIDL	—	—	—	—	—	TGATE	TCKPS<2:0>			T32	—	TCS(2)	—	0000
0810	TMR2	31:16	—	—	—	—	—	—	—	—	—	—	—	—	—	—	—	—	0000
		15:0	TMR2<15:0>																0000
0820	PR2	31:16	—	—	—	—	—	—	—	—	—	—	—	—	—	—	—	—	0000
		15:0	PR2<15:0>																FFFF
0A00	T3CON	31:16	—	—	—	—	—	—	—	—	—	—	—	—	—	—	—	—	0000
		15:0	ON	—	SIDL	—	—	—	—	—	TGATE	TCKPS<2:0>			—	—	TCS(2)	—	0000
0A10	TMR3	31:16	—	—	—	—	—	—	—	—	—	—	—	—	—	—	—	—	0000
		15:0	TMR3<15:0>																0000
0A20	PR3	31:16	—	—	—	—	—	—	—	—	—	—	—	—	—	—	—	—	0000
		15:0	PR3<15:0>																FFFF
0C00	T4CON	31:16	—	—	—	—	—	—	—	—	—	—	—	—	—	—	—	—	0000
		15:0	ON	—	SIDL	—	—	—	—	—	TGATE	TCKPS<2:0>			T32	—	TCS(2)	—	0000
0C10	TMR4	31:16	—	—	—	—	—	—	—	—	—	—	—	—	—	—	—	—	0000
		15:0	TMR4<15:0>																0000
0C20	PR4	31:16	—	—	—	—	—	—	—	—	—	—	—	—	—	—	—	—	0000
		15:0	PR4<15:0>																FFFF
0E00	T5CON	31:16	—	—	—	—	—	—	—	—	—	—	—	—	—	—	—	—	0000
		15:0	ON	—	SIDL	—	—	—	—	—	TGATE	TCKPS<2:0>			—	—	TCS(2)	—	0000
0E10	TMR5	31:16	—	—	—	—	—	—	—	—	—	—	—	—	—	—	—	—	0000
		15:0	TMR5<15:0>																0000
0E20	PR5	31:16	—	—	—	—	—	—	—	—	—	—	—	—	—	—	—	—	0000
		15:0	PR5<15:0>																FFFF

Legend: x = unknown value on Reset; — = unimplemented, read as '0'. Reset values are shown in hexadecimal.

Note 1: All registers in this table have corresponding CLR, SET and INV registers at their virtual addresses, plus offsets of 0x4, 0x8 and 0xC, respectively. See **Section 12.1.1 "CLR, SET and INV Registers"** for more information.

2: These bits are not available on 64-pin devices.

© 2009-2013 Microchip Technology Inc.

TABLE 4-9: INPUT CAPTURE 1-INPUT CAPTURE 5 REGISTER MAP

Virtual Address (BF80_#)	Register Name	Bit Range	Bits																All Resets
			31/15	30/14	29/13	28/12	27/11	26/10	25/9	24/8	23/7	22/6	21/5	20/4	19/3	18/2	17/1	16/0	
2000	IC1CON(1)	31:16	—	—	—	—	—	—	—	—	—	—	—	—	—	—	—	—	0000
		15:0	ON	—	SIDL	—	—	—	FEDGE	C32	ICTMR	ICI<1:0>		ICOV	ICBNE	ICM<2:0>			0000
2010	IC1BUF	31:16	IC1BUF<31:0>																xxxx
		15:0																	xxxx
2200	IC2CON(1)	31:16	—	—	—	—	—	—	—	—	—	—	—	—	—	—	—	—	0000
		15:0	ON	—	SIDL	—	—	—	FEDGE	C32	ICTMR	ICI<1:0>		ICOV	ICBNE	ICM<2:0>			0000
2210	IC2BUF	31:16	IC2BUF<31:0>																xxxx
		15:0																	xxxx
2400	IC3CON(1)	31:16	—	—	—	—	—	—	—	—	—	—	—	—	—	—	—	—	0000
		15:0	ON	—	SIDL	—	—	—	FEDGE	C32	ICTMR	ICI<1:0>		ICOV	ICBNE	ICM<2:0>			0000
2410	IC3BUF	31:16	IC3BUF<31:0>																xxxx
		15:0																	xxxx
2600	IC4CON(1)	31:16	—	—	—	—	—	—	—	—	—	—	—	—	—	—	—	—	0000
		15:0	ON	—	SIDL	—	—	—	FEDGE	C32	ICTMR	ICI<1:0>		ICOV	ICBNE	ICM<2:0>			0000
2610	IC4BUF	31:16	IC4BUF<31:0>																xxxx
		15:0																	xxxx
2800	IC5CON(1)	31:16	—	—	—	—	—	—	—	—	—	—	—	—	—	—	—	—	0000
		15:0	ON	—	SIDL	—	—	—	FEDGE	C32	ICTMR	ICI<1:0>		ICOV	ICBNE	ICM<2:0>			0000
2810	IC5BUF	31:16	IC5BUF<31:0>																xxxx
		15:0																	xxxx

Legend: x = unknown value on Reset; — = unimplemented, read as '0'. Reset values are shown in hexadecimal.

Note 1: This register has corresponding CLR, SET and INV registers at its virtual address, plus an offset of 0x4, 0x8 and 0xC, respectively. See **Section 12.1.1 "CLR, SET and INV Registers"** for more information.

© 2009-2013 Microchip Technology Inc.

TABLE 4-10: OUTPUT COMPARE 1-OUTPUT COMPARE 5 REGISTER MAP

Virtual Address (BF80_#)	Register Name(1)	Bit Range	Bits 31/15	30/14	29/13	28/12	27/11	26/10	25/9	24/8	23/7	22/6	21/5	20/4	19/3	18/2	17/1	16/0	All Resets
3000	OC1CON	31:16	—	—	—	—	—	—	—	—	—	—	—	—	—	—	—	—	0000
		15:0	ON	—	SIDL	—	—	—	—	—	—	—	OC32	OCFLT	OCTSEL	OCM<2:0>			0000
3010	OC1R	31:16	OC1R<31:0>																xxxx
		15:0																	xxxx
3020	OC1RS	31:16	OC1RS<31:0>																xxxx
		15:0																	xxxx
3200	OC2CON	31:16	—	—	—	—	—	—	—	—	—	—	—	—	—	—	—	—	0000
		15:0	ON	—	SIDL	—	—	—	—	—	—	—	OC32	OCFLT	OCTSEL	OCM<2:0>			0000
3210	OC2R	31:16	OC2R<31:0>																xxxx
		15:0																	xxxx
3220	OC2RS	31:16	OC2RS<31:0>																xxxx
		15:0																	xxxx
3400	OC3CON	31:16	—	—	—	—	—	—	—	—	—	—	—	—	—	—	—	—	0000
		15:0	ON	—	SIDL	—	—	—	—	—	—	—	OC32	OCFLT	OCTSEL	OCM<2:0>			0000
3410	OC3R	31:16	OC3R<31:0>																xxxx
		15:0																	xxxx
3420	OC3RS	31:16	OC3RS<31:0>																xxxx
		15:0																	xxxx
3600	OC4CON	31:16	—	—	—	—	—	—	—	—	—	—	—	—	—	—	—	—	0000
		15:0	ON	—	SIDL	—	—	—	—	—	—	—	OC32	OCFLT	OCTSEL	OCM<2:0>			0000
3610	OC4R	31:16	OC4R<31:0>																xxxx
		15:0																	xxxx
3620	OC4RS	31:16	OC4RS<31:0>																xxxx
		15:0																	xxxx
3800	OC5CON	31:16	—	—	—	—	—	—	—	—	—	—	—	—	—	—	—	—	0000
		15:0	ON	—	SIDL	—	—	—	—	—	—	—	OC32	OCFLT	OCTSEL	OCM<2:0>			0000
3810	OC5R	31:16	OC5R<31:0>																xxxx
		15:0																	xxxx
3820	OC5RS	31:16	OC5RS<31:0>																xxxx
		15:0																	xxxx

Legend: x = unknown value on Reset; — = unimplemented, read as '0'. Reset values are shown in hexadecimal.

Note 1: All registers in this table have corresponding CLR, SET and INV registers at their virtual addresses, plus offsets of 0x4, 0x8 and 0xC, respectively. See **Section 12.1.1 "CLR, SET and INV Registers"** for more information.

© 2009-2013 Microchip Technology Inc.

TABLE 4-11: I2C1, I2C3, I2C4 AND I2C5 REGISTER MAP

Virtual Address (BF80_#)	Register Name(1)	Bit Range	Bits 31/15	30/14	29/13	28/12	27/11	26/10	25/9	24/8	23/7	22/6	21/5	20/4	19/3	18/2	17/1	16/0	All Resets
5000	I2C3CON	31:16	—	—	—	—	—	—	—	—	—	—	—	—	—	—	—	—	0000
		15:0	ON	—	SIDL	SCLREL	STRICT	A10M	DISSLW	SMEN	GCEN	STREN	ACKDT	ACKEN	RCEN	PEN	RSEN	SEN	1000
5010	I2C3STAT	31:16	—	—	—	—	—	—	—	—	—	—	—	—	—	—	—	—	0000
		15:0	ACKSTAT	TRSTAT	—	—	—	BCL	GCSTAT	ADD10	IWCOL	I2COV	D/A	P	S	R/W	RBF	TBF	0000
5020	I2C3ADD	31:16	—	—	—	—	—	—	—	—	—	—	—	—	—	—	—	—	0000
		15:0	—	—	—	—	—	—	ADD<9:0>										0000
5030	I2C3MSK	31:16	—	—	—	—	—	—	—	—	—	—	—	—	—	—	—	—	0000
		15:0	—	—	—	—	—	—	MSK<9:0>										0000
5040	I2C3BRG	31:16	—	—	—	—	—	—	—	—	—	—	—	—	—	—	—	—	0000
		15:0	—	—	—	—	Baud Rate Generator Register												0000
5050	I2C3TRN	31:16	—	—	—	—	—	—	—	—	—	—	—	—	—	—	—	—	0000
		15:0	—	—	—	—	—	—	—	—	Transmit Register								0000
5060	I2C3RCV	31:16	—	—	—	—	—	—	—	—	—	—	—	—	—	—	—	—	0000
		15:0	—	—	—	—	—	—	—	—	Receive Register								0000
5100	I2C4CON	31:16	—	—	—	—	—	—	—	—	—	—	—	—	—	—	—	—	0000
		15:0	ON	—	SIDL	SCLREL	STRICT	A10M	DISSLW	SMEN	GCEN	STREN	ACKDT	ACKEN	RCEN	PEN	RSEN	SEN	1000
5110	I2C4STAT	31:16	—	—	—	—	—	—	—	—	—	—	—	—	—	—	—	—	0000
		15:0	ACKSTAT	TRSTAT	—	—	—	BCL	GCSTAT	ADD10	IWCOL	I2COV	D/A	P	S	R/W	RBF	TBF	0000
5120	I2C4ADD	31:16	—	—	—	—	—	—	—	—	—	—	—	—	—	—	—	—	0000
		15:0	—	—	—	—	—	—	ADD<9:0>										0000
5130	I2C4MSK	31:16	—	—	—	—	—	—	—	—	—	—	—	—	—	—	—	—	0000
		15:0	—	—	—	—	—	—	MSK<9:0>										0000
5140	I2C4BRG	31:16	—	—	—	—	—	—	—	—	—	—	—	—	—	—	—	—	0000
		15:0	—	—	—	—	Baud Rate Generator Register												0000
5150	I2C4TRN	31:16	—	—	—	—	—	—	—	—	—	—	—	—	—	—	—	—	0000
		15:0	—	—	—	—	—	—	—	—	Transmit Register								0000
5160	I2C4RCV	31:16	—	—	—	—	—	—	—	—	—	—	—	—	—	—	—	—	0000
		15:0	—	—	—	—	—	—	—	—	Receive Register								0000
5200	I2C5CON	31:16	—	—	—	—	—	—	—	—	—	—	—	—	—	—	—	—	0000
		15:0	ON	—	SIDL	SCLREL	STRICT	A10M	DISSLW	SMEN	GCEN	STREN	ACKDT	ACKEN	RCEN	PEN	RSEN	SEN	1000
5210	I2C5STAT	31:16	—	—	—	—	—	—	—	—	—	—	—	—	—	—	—	—	0000
		15:0	ACKSTAT	TRSTAT	—	—	—	BCL	GCSTAT	ADD10	IWCOL	I2COV	D/A	P	S	R/W	RBF	TBF	0000

Legend: x = unknown value on Reset; — = unimplemented, read as '0'. Reset values are shown in hexadecimal.

Note 1: All registers in this table except I2CxRCV have corresponding CLR, SET and INV registers at their virtual addresses, plus offsets of 0x4, 0x8 and 0xC, respectively. See **Section 12.1.1 "CLR, SET and INV Registers"** for more information.

© 2009-2013 Microchip Technology Inc.

TABLE 4-11: I2C1, I2C3, I2C4 AND I2C5 REGISTER MAP (CONTINUED)

Virtual Address (BF80_#)	Register Name(1)	Bit Range	Bits																All Resets
			31/15	30/14	29/13	28/12	27/11	26/10	25/9	24/8	23/7	22/6	21/5	20/4	19/3	18/2	17/1	16/0	
5220	I2C5ADD	31:16	—	—	—	—	—	—	—	—	—	—	—	—	—	—	—	—	0000
		15:0	—	—	—	—	—	—	ADD<9:0>										0000
5230	I2C5MSK	31:16	—	—	—	—	—	—	—	—	—	—	—	—	—	—	—	—	0000
		15:0	—	—	—	—	—	—	MSK<9:0>										0000
5240	I2C5BRG	31:16	—	—	—	—	—	—	—	—	—	—	—	—	—	—	—	—	0000
		15:0	—	—	—	—	Baud Rate Generator Register												0000
5250	I2C5TRN	31:16	—	—	—	—	—	—	—	—	—	—	—	—	—	—	—	—	0000
		15:0	—	—	—	—	—	—	—	—	Transmit Register								0000
5260	I2C5RCV	31:16	—	—	—	—	—	—	—	—	—	—	—	—	—	—	—	—	0000
		15:0	—	—	—	—	—	—	—	—	Receive Register								0000
5300	I2C1CON	31:16	—	—	—	—	—	—	—	—	—	—	—	—	—	—	—	—	0000
		15:0	ON	—	SIDL	SCLREL	STRICT	A10M	DISSLW	SMEN	GCEN	STREN	ACKDT	ACKEN	RCEN	PEN	RSEN	SEN	1000
5310	I2C1STAT	31:16	—	—	—	—	—	—	—	—	—	—	—	—	—	—	—	—	0000
		15:0	ACKSTAT	TRSTAT	—	—	—	BCL	GCSTAT	ADD10	IWCOL	I2COV	D/A	P	S	R/W	RBF	TBF	0000
5320	I2C1ADD	31:16	—	—	—	—	—	—	—	—	—	—	—	—	—	—	—	—	0000
		15:0	—	—	—	—	—	—	ADD<9:0>										0000
5330	I2C1MSK	31:16	—	—	—	—	—	—	—	—	—	—	—	—	—	—	—	—	0000
		15:0	—	—	—	—	—	—	MSK<9:0>										0000
5340	I2C1BRG	31:16	—	—	—	—	—	—	—	—	—	—	—	—	—	—	—	—	0000
		15:0	—	—	—	—	Baud Rate Generator Register												0000
5350	I2C1TRN	31:16	—	—	—	—	—	—	—	—	—	—	—	—	—	—	—	—	0000
		15:0	—	—	—	—	—	—	—	—	Transmit Register								0000
5360	I2C1RCV	31:16	—	—	—	—	—	—	—	—	—	—	—	—	—	—	—	—	0000
		15:0	—	—	—	—	—	—	—	—	Receive Register								0000

Legend: x = unknown value on Reset; — = unimplemented, read as '0'. Reset values are shown in hexadecimal.

Note 1: All registers in this table except I2CxRCV have corresponding CLR, SET and INV registers at their virtual addresses, plus offsets of 0x4, 0x8 and 0xC, respectively. See **Section 12.1.1 "CLR, SET and INV Registers"** for more information.

© 2009-2013 Microchip Technology Inc.

TABLE 4-12: I2C2 REGISTER MAP FOR PIC32MX534F064L, PIC32MX564F064L, PIC32MX564F128L, PIC32MX575F256L, PIC32MX575F512L, PIC32MX664F064L, PIC32MX664F128L, PIC32MX675F256L, PIC32MX675F512L, PIC32MX695F512L, PIC32MX764F128L, PIC32MX775F256L, PIC32MX775F512L AND PIC32MX795F512L DEVICES

Virtual Address (BF80_#)	Register Name(1)	Bit Range	Bits																All Resets
			31/15	30/14	29/13	28/12	27/11	26/10	25/9	24/8	23/7	22/6	21/5	20/4	19/3	18/2	17/1	16/0	
5400	I2C2CON	31:16	—	—	—	—	—	—	—	—	—	—	—	—	—	—	—	—	0000
		15:0	ON	—	SIDL	SCLREL	STRICT	A10M	DISSLW	SMEN	GCEN	STREN	ACKDT	ACKEN	RCEN	PEN	RSEN	SEN	1000
5410	I2C2STAT	31:16	—	—	—	—	—	—	—	—	—	—	—	—	—	—	—	—	0000
		15:0	ACKSTAT	TRSTAT	—	—	—	BCL	GCSTAT	ADD10	IWCOL	I2COV	D/A	P	S	R/W	RBF	TBF	0000
5420	I2C2ADD	31:16	—	—	—	—	—	—	—	—	—	—	—	—	—	—	—	—	0000
		15:0	—	—	—	—	—	—	ADD<9:0>										0000
5430	I2C2MSK	31:16	—	—	—	—	—	—	—	—	—	—	—	—	—	—	—	—	0000
		15:0	—	—	—	—	—	—	MSK<9:0>										0000
5440	I2C2BRG	31:16	—	—	—	—	—	—	—	—	—	—	—	—	—	—	—	—	0000
		15:0	—	—	—	—	Baud Rate Generator Register												0000
5450	I2C2TRN	31:16	—	—	—	—	—	—	—	—	—	—	—	—	—	—	—	—	0000
		15:0	—	—	—	—	—	—	—	—	Transmit Register								0000
5460	I2C2RCV	31:16	—	—	—	—	—	—	—	—	—	—	—	—	—	—	—	—	0000
		15:0	—	—	—	—	—	—	—	—	Receive Register								0000

Legend: x = unknown value on Reset; — = unimplemented, read as '0'. Reset values are shown in hexadecimal.

Note 1: All registers in this table except I2CxRCV have corresponding CLR, SET and INV registers at their virtual addresses, plus offsets of 0x4, 0x8 and 0xC, respectively. See **Section 12.1.1 "CLR, SET and INV Registers"** for more information.

© 2009-2013 Microchip Technology Inc.

TABLE 4-13: UART1 THROUGH UART6 REGISTER MAP

Virtual Address (BF80_#)	Register Name	Bit Range	Bits 31/15	30/14	29/13	28/12	27/11	26/10	25/9	24/8	23/7	22/6	21/5	20/4	19/3	18/2	17/1	16/0	All Resets
6000	U1MODE(1)	31:16	—	—	—	—	—	—	—	—	—	—	—	—	—	—	—	—	0000
		15:0	ON	—	SIDL	IREN	RTSMD	—	UEN<1:0>		WAKE	LPBACK	ABAUD	RXINV	BRGH	PDSEL<1:0>		STSEL	0000
6010	U1STA(1)	31:16	—	—	—	—	—	—	—	ADM_EN	ADDR<7:0>								0000
		15:0	UTXISEL<1:0>		UTXINV	URXEN	UTXBRK	UTXEN	UTXBF	TRMT	URXISEL<1:0>		ADDEN	RIDLE	PERR	FERR	OERR	URXDA	0110
6020	U1TXREG	31:16	—	—	—	—	—	—	—	—	—	—	—	—	—	—	—	—	0000
		15:0	—	—	—	—	—	—	—	TX8	Transmit Register								0000
6030	U1RXREG	31:16	—	—	—	—	—	—	—	—	—	—	—	—	—	—	—	—	0000
		15:0	—	—	—	—	—	—	—	RX8	Receive Register								0000
6040	U1BRG(1)	31:16	—	—	—	—	—	—	—	—	—	—	—	—	—	—	—	—	0000
		15:0	BRG<15:0>																0000
6200	U4MODE(1)	31:16	—	—	—	—	—	—	—	—	—	—	—	—	—	—	—	—	0000
		15:0	ON	—	SIDL	IREN	—	—	—	—	WAKE	LPBACK	ABAUD	RXINV	BRGH	PDSEL<1:0>		STSEL	0000
6210	U4STA(1)	31:16	—	—	—	—	—	—	—	ADM_EN	ADDR<7:0>								0000
		15:0	UTXISEL<1:0>		UTXINV	URXEN	UTXBRK	UTXEN	UTXBF	TRMT	URXISEL<1:0>		ADDEN	RIDLE	PERR	FERR	OERR	URXDA	0110
6220	U4TXREG	31:16	—	—	—	—	—	—	—	—	—	—	—	—	—	—	—	—	0000
		15:0	—	—	—	—	—	—	—	TX8	Transmit Register								0000
6230	U4RXREG	31:16	—	—	—	—	—	—	—	—	—	—	—	—	—	—	—	—	0000
		15:0	—	—	—	—	—	—	—	RX8	Receive Register								0000
6240	U4BRG(1)	31:16	—	—	—	—	—	—	—	—	—	—	—	—	—	—	—	—	0000
		15:0	BRG<15:0>																0000
6400	U3MODE(1)	31:16	—	—	—	—	—	—	—	—	—	—	—	—	—	—	—	—	0000
		15:0	ON	—	SIDL	IREN	RTSMD	—	UEN<1:0>		WAKE	LPBACK	ABAUD	RXINV	BRGH	PDSEL<1:0>		STSEL	0000
6410	U3STA(1)	31:16	—	—	—	—	—	—	—	ADM_EN	ADDR<7:0>								0000
		15:0	UTXISEL<1:0>		UTXINV	URXEN	UTXBRK	UTXEN	UTXBF	TRMT	URXISEL<1:0>		ADDEN	RIDLE	PERR	FERR	OERR	URXDA	0110
6420	U3TXREG	31:16	—	—	—	—	—	—	—	—	—	—	—	—	—	—	—	—	0000
		15:0	—	—	—	—	—	—	—	TX8	Transmit Register								0000
6430	U3RXREG	31:16	—	—	—	—	—	—	—	—	—	—	—	—	—	—	—	—	0000
		15:0	—	—	—	—	—	—	—	RX8	Receive Register								0000
6440	U3BRG(1)	31:16	—	—	—	—	—	—	—	—	—	—	—	—	—	—	—	—	0000
		15:0	BRG<15:0>																0000
6600	U6MODE(1)	31:16	—	—	—	—	—	—	—	—	—	—	—	—	—	—	—	—	0000
		15:0	ON	—	SIDL	IREN	—	—	—	—	WAKE	LPBACK	ABAUD	RXINV	BRGH	PDSEL<1:0>		STSEL	0000
6610	U6STA(1)	31:16	—	—	—	—	—	—	—	ADM_EN	ADDR<7:0>								0000
		15:0	UTXISEL<1:0>		UTXINV	URXEN	UTXBRK	UTXEN	UTXBF	TRMT	URXISEL<1:0>		ADDEN	RIDLE	PERR	FERR	OERR	URXDA	0110
6620	U6TXREG	31:16	—	—	—	—	—	—	—	—	—	—	—	—	—	—	—	—	0000
		15:0	—	—	—	—	—	—	—	TX8	Transmit Register								0000

Legend: x = unknown value on Reset; — = unimplemented, read as '0'. Reset values are shown in hexadecimal.

Note 1: This register has corresponding CLR, SET and INV registers at its virtual address, plus an offset of 0x4, 0x8 and 0xC, respectively. See **Section 12.1.1 "CLR, SET and INV Registers"** for more information.

© 2009-2013 Microchip Technology Inc.

TABLE 4-13: UART1 THROUGH UART6 REGISTER MAP (CONTINUED)

Virtual Address (BF80_#)	Register Name	Bit Range	Bits																All Resets
			31/15	30/14	29/13	28/12	27/11	26/10	25/9	24/8	23/7	22/6	21/5	20/4	19/3	18/2	17/1	16/0	
6630	U6RXREG	31:16	—	—	—	—	—	—	—	—	—	—	—	—	—	—	—	—	0000
		15:0	—	—	—	—	—	—	—	RX8	Receive Register								0000
6640	U6BRG(1)	31:16	—	—	—	—	—	—	—	—	—	—	—	—	—	—	—	—	0000
		15:0	BRG<15:0>																0000
6800	U2MODE(1)	31:16	—	—	—	—	—	—	—	—	—	—	—	—	—	—	—	—	0000
		15:0	ON	—	SIDL	IREN	RTSMD	—	UEN<1:0>		WAKE	LPBACK	ABAUD	RXINV	BRGH	PDSEL<1:0>		STSEL	0000
6810	U2STA(1)	31:16	—	—	—	—	—	—	—	ADM_EN	ADDR<7:0>								0000
		15:0	UTXISEL<1:0>		UTXINV	URXEN	UTXBRK	UTXEN	UTXBF	TRMT	URXISEL<1:0>		ADDEN	RIDLE	PERR	FERR	OERR	URXDA	0110
6820	U2TXREG	31:16	—	—	—	—	—	—	—	—	—	—	—	—	—	—	—	—	0000
		15:0	—	—	—	—	—	—	—	TX8	Transmit Register								0000
6830	U2RXREG	31:16	—	—	—	—	—	—	—	—	—	—	—	—	—	—	—	—	0000
		15:0	—	—	—	—	—	—	—	RX8	Receive Register								0000
6840	U2BRG(1)	31:16	—	—	—	—	—	—	—	—	—	—	—	—	—	—	—	—	0000
		15:0	BRG<15:0>																0000
6A00	U5MODE(1)	31:16	—	—	—	—	—	—	—	—	—	—	—	—	—	—	—	—	0000
		15:0	ON	—	SIDL	IREN	—	—	—	—	WAKE	LPBACK	ABAUD	RXINV	BRGH	PDSEL<1:0>		STSEL	0000
6A10	U5STA(1)	31:16	—	—	—	—	—	—	—	ADM_EN	ADDR<7:0>								0000
		15:0	UTXISEL<1:0>		UTXINV	URXEN	UTXBRK	UTXEN	UTXBF	TRMT	URXISEL<1:0>		ADDEN	RIDLE	PERR	FERR	OERR	URXDA	0110
6A20	U5TXREG	31:16	—	—	—	—	—	—	—	—	—	—	—	—	—	—	—	—	0000
		15:0	—	—	—	—	—	—	—	TX8	Transmit Register								0000
6A30	U5RXREG	31:16	—	—	—	—	—	—	—	—	—	—	—	—	—	—	—	—	0000
		15:0	—	—	—	—	—	—	—	RX8	Receive Register								0000
6A40	U5BRG(1)	31:16	—	—	—	—	—	—	—	—	—	—	—	—	—	—	—	—	0000
		15:0	BRG<15:0>																0000

Legend: x = unknown value on Reset; — = unimplemented, read as '0'. Reset values are shown in hexadecimal.

Note 1: This register has corresponding CLR, SET and INV registers at its virtual address, plus an offset of 0x4, 0x8 and 0xC, respectively. See **Section 12.1.1 "CLR, SET and INV Registers"** for more information.

© 2009-2013 Microchip Technology Inc.

TABLE 4-14: SPI2, SPI3 AND SPI4 REGISTER MAP

Virtual Address (BF80_#)	Register Name(1)	Bit Range	Bits																All Resets
			31/15	30/14	29/13	28/12	27/11	26/10	25/9	24/8	23/7	22/6	21/5	20/4	19/3	18/2	17/1	16/0	
5800	SPI3CON	31:16	FRMEN	FRMSYNC	FRMPOL	MSSEN	FRMSYPW	FRMCNT<2:0>			—	—	—	—	—	—	SPIFE	ENHBUF	0000
		15:0	ON	—	SIDL	DISSDO	MODE32	MODE16	SMP	CKE	SSEN	CKP	MSTEN	—	STXISEL<1:0>		SRXISEL<1:0>		0000
5810	SPI3STAT	31:16	—	—	—	RXBUFELM<4:0>					—	—	—	TXBUFELM<4:0>					0000
		15:0	—	—	—	—	SPIBUSY	—	—	SPITUR	SRMT	SPIROV	SPIRBE	—	SPITBE	—	SPITBF	SPIRBF	0008
5820	SPI3BUF	31:16	DATA<31:0>																0000
		15:0																	0000
5830	SPI3BRG	31:16	—	—	—	—	—	—	—	—	—	—	—	—	—	—	—	—	0000
		15:0	—	—	—	—	—	—	—	BRG<8:0>									0000
5A00	SPI2CON	31:16	FRMEN	FRMSYNC	FRMPOL	MSSEN	FRMSYPW	FRMCNT<2:0>			—	—	—	—	—	—	SPIFE	ENHBUF	0000
		15:0	ON	—	SIDL	DISSDO	MODE32	MODE16	SMP	CKE	SSEN	CKP	MSTEN	—	STXISEL<1:0>		SRXISEL<1:0>		0000
5A10	SPI2STAT	31:16	—	—	—	RXBUFELM<4:0>					—	—	—	TXBUFELM<4:0>					0000
		15:0	—	—	—	—	SPIBUSY	—	—	SPITUR	SRMT	SPIROV	SPIRBE	—	SPITBE	—	SPITBF	SPIRBF	0008
5A20	SPI2BUF	31:16	DATA<31:0>																0000
		15:0																	0000
5A30	SPI2BRG	31:16	—	—	—	—	—	—	—	—	—	—	—	—	—	—	—	—	0000
		15:0	—	—	—	—	—	—	—	BRG<8:0>									0000
5C00	SPI4CON	31:16	FRMEN	FRMSYNC	FRMPOL	MSSEN	FRMSYPW	FRMCNT<2:0>			—	—	—	—	—	—	SPIFE	ENHBUF	0000
		15:0	ON	—	SIDL	DISSDO	MODE32	MODE16	SMP	CKE	SSEN	CKP	MSTEN	—	STXISEL<1:0>		SRXISEL<1:0>		0000
5C10	SPI4STAT	31:16	—	—	—	RXBUFELM<4:0>					—	—	—	TXBUFELM<4:0>					0000
		15:0	—	—	—	—	SPIBUSY	—	—	SPITUR	SRMT	SPIROV	SPIRBE	—	SPITBE	—	SPITBF	SPIRBF	0008
5C20	SPI4BUF	31:16	DATA<31:0>																0000
		15:0																	0000
5C30	SPI4BRG	31:16	—	—	—	—	—	—	—	—	—	—	—	—	—	—	—	—	0000
		15:0	—	—	—	—	—	—	—	BRG<8:0>									0000

Legend: x = unknown value on Reset; — = unimplemented, read as '0'. Reset values are shown in hexadecimal.

Note 1: All registers in this table except SPIxBUF have corresponding CLR, SET and INV registers at their virtual addresses, plus offsets of 0x4, 0x8 and 0xC, respectively. See **Section 12.1.1 "CLR, SET and INV Registers"** for more information.

© 2009-2013 Microchip Technology Inc.

TABLE 4-15: SPI1 REGISTER MAP FOR PIC32MX534F064L, PIC32MX564F064L, PIC32MX564F128L, PIC32MX575F256L, PIC32MX575F512L, PIC32MX664F064L, PIC32MX664F128L, PIC32MX675F256L, PIC32MX675F512L, PIC32MX695F512L, PIC32MX764F128L, PIC32MX775F256L, PIC32MX775F512L AND PIC32MX795F512L DEVICES

Virtual Address (BF80_#)	Register Name(1)	Bit Range	Bits																All Resets
			31/15	30/14	29/13	28/12	27/11	26/10	25/9	24/8	23/7	22/6	21/5	20/4	19/3	18/2	17/1	16/0	
5E00	SPI1CON	31:16	FRMEN	FRMSYNC	FRMPOL	MSSEN	FRMSYPW	FRMCNT<2:0>			—	—	—	—	—	—	SPIFE	ENHBUF	0000
		15:0	ON	—	SIDL	DISSDO	MODE32	MODE16	SMP	CKE	SSEN	CKP	MSTEN	—	STXISEL<1:0>		SRXISEL<1:0>		0000
5E10	SPI1STAT	31:16	—	—	—	RXBUFELM<4:0>					—	—	—	TXBUFELM<4:0>					0000
		15:0	—	—	—	—	SPIBUSY	—	—	SPITUR	SRMT	SPIROV	SPIRBE	—	SPITBE	—	SPITBF	SPIRBF	0008
5E20	SPI1BUF	31:16	DATA<31:0>																0000
		15:0																	0000
5E30	SPI1BRG	31:16	—	—	—	—	—	—	—	—	—	—	—	—	—	—	—	—	0000
		15:0	—	—	—	—	—	—	—	BRG<8:0>									0000

Legend: x = unknown value on Reset; — = unimplemented, read as '0'. Reset values are shown in hexadecimal.

Note 1: All registers in this table except SPI1BUF have corresponding CLR, SET and INV registers at their virtual addresses, plus offsets of 0x4, 0x8 and 0xC, respectively. See **Section 12.1.1 "CLR, SET and INV Registers"** for more information.

© 2009-2013 Microchip Technology Inc.

TABLE 4-16: ADC REGISTER MAP

Virtual Address (BF80_#)	Register Name	Bit Range	Bits 31/15	30/14	29/13	28/12	27/11	26/10	25/9	24/8	23/7	22/6	21/5	20/4	19/3	18/2	17/1	16/0	All Resets
9000	AD1CON1(1)	31:16	—	—	—	—	—	—	—	—	—	—	—	—	—	—	—	—	0000
		15:0	ON	—	SIDL	—	—	FORM<2:0>			SSRC<2:0>			CLRASAM	—	ASAM	SAMP	DONE	0000
9010	AD1CON2(1)	31:16	—	—	—	—	—	—	—	—	—	—	—	—	—	—	—	—	0000
		15:0	VCFG2	VCFG1	VCFG0	OFFCAL	—	CSCNA	—	—	BUFS	—	SMPI<3:0>				BUFM	ALTS	0000
9020	AD1CON3(1)	31:16	—	—	—	—	—	—	—	—	—	—	—	—	—	—	—	—	0000
		15:0	ADRC	—	—	SAMC<4:0>					ADCS<7:0>								0000
9040	AD1CHS(1)	31:16	CH0NB	—	—	—	CH0SB<3:0>				CH0NA	—	—	—	CH0SA<3:0>				0000
		15:0	—	—	—	—	—	—	—	—	—	—	—	—	—	—	—	—	0000
9060	AD1PCFG(1)	31:16	—	—	—	—	—	—	—	—	—	—	—	—	—	—	—	—	0000
		15:0	PCFG15	PCFG14	PCFG13	PCFG12	PCFG11	PCFG10	PCFG9	PCFG8	PCFG7	PCFG6	PCFG5	PCFG4	PCFG3	PCFG2	PCFG1	PCFG0	0000
9050	AD1CSSL(1)	31:16	—	—	—	—	—	—	—	—	—	—	—	—	—	—	—	—	0000
		15:0	CSSL15	CSSL14	CSSL13	CSSL12	CSSL11	CSSL10	CSSL9	CSSL8	CSSL7	CSSL6	CSSL5	CSSL4	CSSL3	CSSL2	CSSL1	CSSL0	0000
9070	ADC1BUF0	31:16	ADC Result Word 0 (ADC1BUF0<31:0>)																0000
		15:0																	0000
9080	ADC1BUF1	31:16	ADC Result Word 1 (ADC1BUF1<31:0>)																0000
		15:0																	0000
9090	ADC1BUF2	31:16	ADC Result Word 2 (ADC1BUF2<31:0>)																0000
		15:0																	0000
90A0	ADC1BUF3	31:16	ADC Result Word 3 (ADC1BUF3<31:0>)																0000
		15:0																	0000
90B0	ADC1BUF4	31:16	ADC Result Word 4 (ADC1BUF4<31:0>)																0000
		15:0																	0000
90C0	ADC1BUF5	31:16	ADC Result Word 5 (ADC1BUF5<31:0>)																0000
		15:0																	0000
90D0	ADC1BUF6	31:16	ADC Result Word 6 (ADC1BUF6<31:0>)																0000
		15:0																	0000
90E0	ADC1BUF7	31:16	ADC Result Word 7 (ADC1BUF7<31:0>)																0000
		15:0																	0000
90F0	ADC1BUF8	31:16	ADC Result Word 8 (ADC1BUF8<31:0>)																0000
		15:0																	0000
9100	ADC1BUF9	31:16	ADC Result Word 9 (ADC1BUF9<31:0>)																0000
		15:0																	0000
9110	ADC1BUFA	31:16	ADC Result Word A (ADC1BUFA<31:0>)																0000
		15:0																	0000
9120	ADC1BUFB	31:16	ADC Result Word B (ADC1BUFB<31:0>)																0000
		15:0																	0000

Legend: x = unknown value on Reset; — = unimplemented, read as '0'. Reset values are shown in hexadecimal.

Note 1: This register has corresponding CLR, SET and INV registers at their virtual addresses, plus offsets of 0x4, 0x8 and 0xC, respectively. See **Section 12.1.1 "CLR, SET and INV Registers"** for more information.

© 2009-2013 Microchip Technology Inc.

TABLE 4-16: ADC REGISTER MAP (CONTINUED)

Virtual Address (BF80_#)	Register Name	Bit Range	Bits																All Resets
			31/15	30/14	29/13	28/12	27/11	26/10	25/9	24/8	23/7	22/6	21/5	20/4	19/3	18/2	17/1	16/0	
9130	ADC1BUFC	31:16	ADC Result Word C (ADC1BUFC<31:0>)																0000
		15:0																	0000
9140	ADC1BUFD	31:16	ADC Result Word D (ADC1BUFD<31:0>)																0000
		15:0																	0000
9150	ADC1BUFE	31:16	ADC Result Word E (ADC1BUFE<31:0>)																0000
		15:0																	0000
9160	ADC1BUFF	31:16	ADC Result Word F (ADC1BUFF<31:0>)																0000
		15:0																	0000

Legend: x = unknown value on Reset; — = unimplemented, read as '0'. Reset values are shown in hexadecimal.

Note 1: This register has corresponding CLR, SET and INV registers at their virtual addresses, plus offsets of 0x4, 0x8 and 0xC, respectively. See **Section 12.1.1 "CLR, SET and INV Registers"** for more information.

© 2009-2013 Microchip Technology Inc.

TABLE 4-17: DMA GLOBAL REGISTER MAP

Virtual Address (BF88_#)	Register Name	Bit Range	Bits 31/15	30/14	29/13	28/12	27/11	26/10	25/9	24/8	23/7	22/6	21/5	20/4	19/3	18/2	17/1	16/0	All Resets
3000	DMACON(1)	31:16	—	—	—	—	—	—	—	—	—	—	—	—	—	—	—	—	0000
		15:0	ON	—	—	SUSPEND	DMABUSY	—	—	—	—	—	—	—	—	—	—	—	0000
3010	DMASTAT	31:16	—	—	—	—	—	—	—	—	—	—	—	—	—	—	—	—	0000
		15:0	—	—	—	—	—	—	—	—	—	—	—	—	RDWR	DMACH<2:0>(2)			0000
3020	DMAADDR	31:16	DMAADDR<31:0>																0000
		15:0																	0000

Legend: x = unknown value on Reset; — = unimplemented, read as '0'. Reset values are shown in hexadecimal.

Note 1: This register has corresponding CLR, SET and INV registers at its virtual address, plus an offset of 0x4, 0x8 and 0xC, respectively. See **Section 12.1.1 "CLR, SET and INV Registers"** for more information.

2: DMACH<3> bit is not available on PIC32MX534/564/664/764 devices.

TABLE 4-18: DMA CRC REGISTER MAP(1)

Virtual Address (BF88_#)	Register Name(1)	Bit Range	Bits 31/15	30/14	29/13	28/12	27/11	26/10	25/9	24/8	23/7	22/6	21/5	20/4	19/3	18/2	17/1	16/0	All Resets
3030	DCRCCON	31:16	—	—	BYTO<1:0>		WBO	—	—	BITO	—	—	—	—	—	—	—	—	0000
		15:0	—	—	—	PLEN<4:0>					CRCEN	CRCAPP	CRCTYP	—	—	CRCCH<2:0>			0000
3040	DCRCDATA	31:16	DCRCDATA<31:0>																0000
		15:0																	0000
3050	DCRCXOR	31:16	DCRCXOR<31:0>																0000
		15:0																	0000

Legend: x = unknown value on Reset; — = unimplemented, read as '0'. Reset values are shown in hexadecimal.

Note 1: All registers in this table have corresponding CLR, SET and INV registers at their virtual addresses, plus offsets of 0x4, 0x8 and 0xC, respectively. See **Section 12.1.1 "CLR, SET and INV Registers"** for more information.

© 2009-2013 Microchip Technology Inc.

TABLE 4-19: DMA CHANNELS 0-7 REGISTER MAP

Virtual Address (BF88_#)	Register Name(1)	Bit Range	Bits 31/15	30/14	29/13	28/12	27/11	26/10	25/9	24/8	23/7	22/6	21/5	20/4	19/3	18/2	17/1	16/0	All Resets
3060	DCH0CON	31:16	—	—	—	—	—	—	—	—	—	—	—	—	—	—	—	—	0000
		15:0	CHBUSY	—	—	—	—	—	—	CHCHNS	CHEN	CHAED	CHCHN	CHAEN	—	CHEDET	CHPRI<1:0>		0000
3070	DCH0ECON	31:16	—	—	—	—	—	—	—	—	CHAIRQ<7:0>								00FF
		15:0	CHSIRQ<7:0>								CFORCE	CABORT	PATEN	SIRQEN	AIRQEN	—	—	—	FF00
3080	DCH0INT	31:16	—	—	—	—	—	—	—	—	CHSDIE	CHSHIE	CHDDIE	CHDHIE	CHBCIE	CHCCIE	CHTAIE	CHERIE	0000
		15:0	—	—	—	—	—	—	—	—	CHSDIF	CHSHIF	CHDDIF	CHDHIF	CHBCIF	CHCCIF	CHTAIF	CHERIF	0000
3090	DCH0SSA	31:16	CHSSA<31:0>																0000
		15:0																	0000
30A0	DCH0DSA	31:16	CHDSA<31:0>																0000
		15:0																	0000
30B0	DCH0SSIZ	31:16	—	—	—	—	—	—	—	—	—	—	—	—	—	—	—	—	0000
		15:0	CHSSIZ<15:0>																0000
30C0	DCH0DSIZ	31:16	—	—	—	—	—	—	—	—	—	—	—	—	—	—	—	—	0000
		15:0	CHDSIZ<15:0>																0000
30D0	DCH0SPTR	31:16	—	—	—	—	—	—	—	—	—	—	—	—	—	—	—	—	0000
		15:0	CHSPTR<15:0>																0000
30E0	DCH0DPTR	31:16	—	—	—	—	—	—	—	—	—	—	—	—	—	—	—	—	0000
		15:0	CHDPTR<15:0>																0000
30F0	DCH0CSIZ	31:16	—	—	—	—	—	—	—	—	—	—	—	—	—	—	—	—	0000
		15:0	CHCSIZ<15:0>																0000
3100	DCH0CPTR	31:16	—	—	—	—	—	—	—	—	—	—	—	—	—	—	—	—	0000
		15:0	CHCPTR<15:0>																0000
3110	DCH0DAT	31:16	—	—	—	—	—	—	—	—	—	—	—	—	—	—	—	—	0000
		15:0	—	—	—	—	—	—	—	—	CHPDAT<7:0>								0000
3120	DCH1CON	31:16	—	—	—	—	—	—	—	—	—	—	—	—	—	—	—	—	0000
		15:0	CHBUSY	—	—	—	—	—	—	CHCHNS	CHEN	CHAED	CHCHN	CHAEN	—	CHEDET	CHPRI<1:0>		0000
3130	DCH1ECON	31:16	—	—	—	—	—	—	—	—	CHAIRQ<7:0>								00FF
		15:0	CHSIRQ<7:0>								CFORCE	CABORT	PATEN	SIRQEN	AIRQEN	—	—	—	FF00
3140	DCH1INT	31:16	—	—	—	—	—	—	—	—	CHSDIE	CHSHIE	CHDDIE	CHDHIE	CHBCIE	CHCCIE	CHTAIE	CHERIE	0000
		15:0	—	—	—	—	—	—	—	—	CHSDIF	CHSHIF	CHDDIF	CHDHIF	CHBCIF	CHCCIF	CHTAIF	CHERIF	0000
3150	DCH1SSA	31:16	CHSSA<31:0>																0000
		15:0																	0000
3160	DCH1DSA	31:16	CHDSA<31:0>																0000
		15:0																	0000
3170	DCH1SSIZ	31:16	—	—	—	—	—	—	—	—	—	—	—	—	—	—	—	—	0000
		15:0	CHSSIZ<15:0>																0000

Legend: x = unknown value on Reset; — = unimplemented, read as '0'. Reset values are shown in hexadecimal.

Note 1: All registers in this table have corresponding CLR, SET and INV registers at their virtual addresses, plus offsets of 0x4, 0x8 and 0xC, respectively. See **Section 12.1.1 "CLR, SET and INV Registers"** for more information.

2: DMA channels 4-7 are not available on PIC32MX534/564/664/764 devices.

© 2009-2013 Microchip Technology Inc.

TABLE 4-19: DMA CHANNELS 0-7 REGISTER MAP (CONTINUED)

Virtual Address (BF88_#)	Register Name(1)	Bit Range	Bits 31/15	30/14	29/13	28/12	27/11	26/10	25/9	24/8	23/7	22/6	21/5	20/4	19/3	18/2	17/1	16/0	All Resets
3180	DCH1DSIZ	31:16	—	—	—	—	—	—	—	—	—	—	—	—	—	—	—	—	0000
		15:0	CHDSIZ<15:0>																0000
3190	DCH1SPTR	31:16	—	—	—	—	—	—	—	—	—	—	—	—	—	—	—	—	0000
		15:0	CHSPTR<15:0>																0000
31A0	DCH1DPTR	31:16	—	—	—	—	—	—	—	—	—	—	—	—	—	—	—	—	0000
		15:0	CHDPTR<15:0>																0000
31B0	DCH1CSIZ	31:16	—	—	—	—	—	—	—	—	—	—	—	—	—	—	—	—	0000
		15:0	CHCSIZ<15:0>																0000
31C0	DCH1CPTR	31:16	—	—	—	—	—	—	—	—	—	—	—	—	—	—	—	—	0000
		15:0	CHCPTR<15:0>																0000
31D0	DCH1DAT	31:16	—	—	—	—	—	—	—	—	—	—	—	—	—	—	—	—	0000
		15:0	—	—	—	—	—	—	—	—	CHPDAT<7:0>								0000
31E0	DCH2CON	31:16	—	—	—	—	—	—	—	—	—	—	—	—	—	—	—	—	0000
		15:0	CHBUSY	—	—	—	—	—	—	CHCHNS	CHEN	CHAED	CHCHN	CHAEN	—	CHEDET	CHPRI<1:0>		0000
31F0	DCH2ECON	31:16	—	—	—	—	—	—	—	—	CHAIRQ<7:0>								00FF
		15:0	CHSIRQ<7:0>								CFORCE	CABORT	PATEN	SIRQEN	AIRQEN	—	—	—	FF00
3200	DCH2INT	31:16	—	—	—	—	—	—	—	—	CHSDIE	CHSHIE	CHDDIE	CHDHIE	CHBCIE	CHCCIE	CHTAIE	CHERIE	0000
		15:0	—	—	—	—	—	—	—	—	CHSDIF	CHSHIF	CHDDIF	CHDHIF	CHBCIF	CHCCIF	CHTAIF	CHERIF	0000
3210	DCH2SSA	31:16	CHSSA<31:0>																0000
		15:0																	0000
3220	DCH2DSA	31:16	CHDSA<31:0>																0000
		15:0																	0000
3230	DCH2SSIZ	31:16	—	—	—	—	—	—	—	—	—	—	—	—	—	—	—	—	0000
		15:0	CHSSIZ<15:0>																0000
3240	DCH2DSIZ	31:16	—	—	—	—	—	—	—	—	—	—	—	—	—	—	—	—	0000
		15:0	CHDSIZ<15:0>																0000
3250	DCH2SPTR	31:16	—	—	—	—	—	—	—	—	—	—	—	—	—	—	—	—	0000
		15:0	CHSPTR<15:0>																0000
3260	DCH2DPTR	31:16	—	—	—	—	—	—	—	—	—	—	—	—	—	—	—	—	0000
		15:0	CHDPTR<15:0>																0000
3270	DCH2CSIZ	31:16	—	—	—	—	—	—	—	—	—	—	—	—	—	—	—	—	0000
		15:0	CHCSIZ<15:0>																0000
3280	DCH2CPTR	31:16	—	—	—	—	—	—	—	—	—	—	—	—	—	—	—	—	0000
		15:0	CHCPTR<15:0>																0000

Legend: x = unknown value on Reset; — = unimplemented, read as '0'. Reset values are shown in hexadecimal.

Note 1: All registers in this table have corresponding CLR, SET and INV registers at their virtual addresses, plus offsets of 0x4, 0x8 and 0xC, respectively. See **Section 12.1.1 "CLR, SET and INV Registers"** for more information.

2: DMA channels 4-7 are not available on PIC32MX534/564/664/764 devices.

© 2009-2013 Microchip Technology Inc.

TABLE 4-19: DMA CHANNELS 0-7 REGISTER MAP (CONTINUED)

Virtual Address (BF88_#)	Register Name(1)	Bit Range	Bits 31/15	30/14	29/13	28/12	27/11	26/10	25/9	24/8	23/7	22/6	21/5	20/4	19/3	18/2	17/1	16/0	All Resets
3290	DCH2DAT	31:16	—	—	—	—	—	—	—	—	—	—	—	—	—	—	—	—	0000
		15:0	—	—	—	—	—	—	—	—	CHPDAT<7:0>								0000
32A0	DCH3CON	31:16	—	—	—	—	—	—	—	—	—	—	—	—	—	—	—	—	0000
		15:0	CHBUSY	—	—	—	—	—	—	CHCHNS	CHEN	CHAED	CHCHN	CHAEN	—	CHEDET	CHPRI<1:0>		0000
32B0	DCH3ECON	31:16	—	—	—	—	—	—	—	—	CHAIRQ<7:0>								00FF
		15:0	CHSIRQ<7:0>								CFORCE	CABORT	PATEN	SIRQEN	AIRQEN	—	—	—	FF00
32C0	DCH3INT	31:16	—	—	—	—	—	—	—	—	CHSDIE	CHSHIE	CHDDIE	CHDHIE	CHBCIE	CHCCIE	CHTAIE	CHERIE	0000
		15:0	—	—	—	—	—	—	—	—	CHSDIF	CHSHIF	CHDDIF	CHDHIF	CHBCIF	CHCCIF	CHTAIF	CHERIF	0000
32D0	DCH3SSA	31:16	CHSSA<31:0>																0000
		15:0																	0000
32E0	DCH3DSA	31:16	CHDSA<31:0>																0000
		15:0																	0000
32F0	DCH3SSIZ	31:16	—	—	—	—	—	—	—	—	—	—	—	—	—	—	—	—	0000
		15:0	CHSSIZ<15:0>																0000
3300	DCH3DSIZ	31:16	—	—	—	—	—	—	—	—	—	—	—	—	—	—	—	—	0000
		15:0	CHDSIZ<15:0>																0000
3310	DCH3SPTR	31:16	—	—	—	—	—	—	—	—	—	—	—	—	—	—	—	—	0000
		15:0	CHSPTR<15:0>																0000
3320	DCH3DPTR	31:16	—	—	—	—	—	—	—	—	—	—	—	—	—	—	—	—	0000
		15:0	CHDPTR<15:0>																0000
3330	DCH3CSIZ	31:16	—	—	—	—	—	—	—	—	—	—	—	—	—	—	—	—	0000
		15:0	CHCSIZ<15:0>																0000
3340	DCH3CPTR	31:16	—	—	—	—	—	—	—	—	—	—	—	—	—	—	—	—	0000
		15:0	CHCPTR<15:0>																0000
3350	DCH3DAT	31:16	—	—	—	—	—	—	—	—	—	—	—	—	—	—	—	—	0000
		15:0	—	—	—	—	—	—	—	—	CHPDAT<7:0>								0000
3360	DCH4CON	31:16	—	—	—	—	—	—	—	—	—	—	—	—	—	—	—	—	0000
		15:0	CHBUSY	—	—	—	—	—	—	CHCHNS	CHEN	CHAED	CHCHN	CHAEN	—	CHEDET	CHPRI<1:0>		0000
3370	DCH4ECON	31:16	—	—	—	—	—	—	—	—	CHAIRQ<7:0>								00FF
		15:0	CHSIRQ<7:0>								CFORCE	CABORT	PATEN	SIRQEN	AIRQEN	—	—	—	FF00
3380	DCH4INT	31:16	—	—	—	—	—	—	—	—	CHSDIE	CHSHIE	CHDDIE	CHDHIE	CHBCIE	CHCCIE	CHTAIE	CHERIE	0000
		15:0	—	—	—	—	—	—	—	—	CHSDIF	CHSHIF	CHDDIF	CHDHIF	CHBCIF	CHCCIF	CHTAIF	CHERIF	0000
3390	DCH4SSA	31:16	CHSSA<31:0>																0000
		15:0																	0000
33A0	DCH4DSA	31:16	CHDSA<31:0>																0000
		15:0																	0000

Legend: x = unknown value on Reset; — = unimplemented, read as '0'. Reset values are shown in hexadecimal.

Note 1: All registers in this table have corresponding CLR, SET and INV registers at their virtual addresses, plus offsets of 0x4, 0x8 and 0xC, respectively. See **Section 12.1.1 "CLR, SET and INV Registers"** for more information.

2: DMA channels 4-7 are not available on PIC32MX534/564/664/764 devices.

© 2009-2013 Microchip Technology Inc.

TABLE 4-19: DMA CHANNELS 0-7 REGISTER MAP (CONTINUED)

Virtual Address (BF88_#)	Register Name(1)	Bit Range	Bits 31/15	30/14	29/13	28/12	27/11	26/10	25/9	24/8	23/7	22/6	21/5	20/4	19/3	18/2	17/1	16/0	All Resets
33B0	DCH4SSIZ	31:16	—	—	—	—	—	—	—	—	—	—	—	—	—	—	—	—	0000
		15:0	CHSSIZ15:0>																0000
33C0	DCH4DSIZ	31:16	—	—	—	—	—	—	—	—	—	—	—	—	—	—	—	—	0000
		15:0	CHDSIZ<15:0>																0000
33D0	DCH4SPTR	31:16	—	—	—	—	—	—	—	—	—	—	—	—	—	—	—	—	0000
		15:0	CHSPTR<15:0>																0000
33E0	DCH4DPTR	31:16	—	—	—	—	—	—	—	—	—	—	—	—	—	—	—	—	0000
		15:0	CHDPTR<15:0>																0000
33F0	DCH4CSIZ	31:16	—	—	—	—	—	—	—	—	—	—	—	—	—	—	—	—	0000
		15:0	CHCSIZ<15:0>																0000
3400	DCH4CPTR	31:16	—	—	—	—	—	—	—	—	—	—	—	—	—	—	—	—	0000
		15:0	CHCPTR<15:0>																0000
3410	DCH4DAT	31:16	—	—	—	—	—	—	—	—	—	—	—	—	—	—	—	—	0000
		15:0	—	—	—	—	—	—	—	—	CHPDAT<7:0>								0000
3420	DCH5CON	31:16	—	—	—	—	—	—	—	—	—	—	—	—	—	—	—	—	0000
		15:0	CHBUSY	—	—	—	—	—	—	CHCHNS	CHEN	CHAED	CHCHN	CHAEN	—	CHEDET	CHPRI<1:0>		0000
3430	DCH5ECON	31:16	—	—	—	—	—	—	—	—	CHAIRQ<7:0>								00FF
		15:0	CHSIRQ<7:0>								CFORCE	CABORT	PATEN	SIRQEN	AIRQEN	—	—	—	FF00
3440	DCH5INT	31:16	—	—	—	—	—	—	—	—	CHSDIE	CHSHIE	CHDDIE	CHDHIE	CHBCIE	CHCCIE	CHTAIE	CHERIE	0000
		15:0	—	—	—	—	—	—	—	—	CHSDIF	CHSHIF	CHDDIF	CHDHIF	CHBCIF	CHCCIF	CHTAIF	CHERIF	0000
3450	DCH5SSA	31:16	CHSSA<31:0>																0000
		15:0																	0000
3460	DCH5DSA	31:16	CHDSA<31:0>																0000
		15:0																	0000
3470	DCH5SSIZ	31:16	—	—	—	—	—	—	—	—	—	—	—	—	—	—	—	—	0000
		15:0	CHSSIZ<15:0>																0000
3480	DCH5DSIZ	31:16	—	—	—	—	—	—	—	—	—	—	—	—	—	—	—	—	0000
		15:0	CHDSIZ<15:0>																0000
3490	DCH5SPTR	31:16	—	—	—	—	—	—	—	—	—	—	—	—	—	—	—	—	0000
		15:0	CHSPTR<15:0>																0000
34A0	DCH5DPTR	31:16	—	—	—	—	—	—	—	—	—	—	—	—	—	—	—	—	0000
		15:0	CHDPTR<15:0>																0000
34B0	DCH5CSIZ	31:16	—	—	—	—	—	—	—	—	—	—	—	—	—	—	—	—	0000
		15:0	CHCSIZ<15:0>																0000
34C0	DCH5CPTR	31:16	—	—	—	—	—	—	—	—	—	—	—	—	—	—	—	—	0000
		15:0	CHCPTR<15:0>																0000

Legend: x = unknown value on Reset; — = unimplemented, read as '0'. Reset values are shown in hexadecimal.

Note 1: All registers in this table have corresponding CLR, SET and INV registers at their virtual addresses, plus offsets of 0x4, 0x8 and 0xC, respectively. See **Section 12.1.1 "CLR, SET and INV Registers"** for more information.

2: DMA channels 4-7 are not available on PIC32MX534/564/664/764 devices.

© 2009-2013 Microchip Technology Inc.

TABLE 4-19: DMA CHANNELS 0-7 REGISTER MAP (CONTINUED)

Virtual Address (BF88_#)	Register Name(1)	Bit Range	Bits 31/15	30/14	29/13	28/12	27/11	26/10	25/9	24/8	23/7	22/6	21/5	20/4	19/3	18/2	17/1	16/0	All Resets
34D0	DCH5DAT	31:16	—	—	—	—	—	—	—	—	—	—	—	—	—	—	—	—	0000
		15:0	—	—	—	—	—	—	—	—	CHPDAT<7:0>								0000
34E0	DCH6CON	31:16	—	—	—	—	—	—	—	—	—	—	—	—	—	—	—	—	0000
		15:0	CHBUSY	—	—	—	—	—	—	CHCHNS	CHEN	CHAED	CHCHN	CHAEN	—	CHEDET	CHPRI<1:0>		0000
34F0	DCH6ECON	31:16	—	—	—	—	—	—	—	—	CHAIRQ<7:0>								00FF
		15:0	CHSIRQ<7:0>								CFORCE	CABORT	PATEN	SIRQEN	AIRQEN	—	—	—	FF00
3500	DCH6INT	31:16	—	—	—	—	—	—	—	—	CHSDIE	CHSHIE	CHDDIE	CHDHIE	CHBCIE	CHCCIE	CHTAIE	CHERIE	0000
		15:0	—	—	—	—	—	—	—	—	CHSDIF	CHSHIF	CHDDIF	CHDHIF	CHBCIF	CHCCIF	CHTAIF	CHERIF	0000
3510	DCH6SSA	31:16	CHSSA<31:0>																0000
		15:0																	0000
3520	DCH6DSA	31:16	CHDSA<31:0>																0000
		15:0																	0000
3530	DCH6SSIZ	31:16	—	—	—	—	—	—	—	—	—	—	—	—	—	—	—	—	0000
		15:0	CHSSIZ<15:0>																0000
3540	DCH6DSIZ	31:16	—	—	—	—	—	—	—	—	—	—	—	—	—	—	—	—	0000
		15:0	CHDSIZ<15:0>																0000
3550	DCH6SPTR	31:16	—	—	—	—	—	—	—	—	—	—	—	—	—	—	—	—	0000
		15:0	CHSPTR<15:0>																0000
3560	DCH6DPTR	31:16	—	—	—	—	—	—	—	—	—	—	—	—	—	—	—	—	0000
		15:0	CHDPTR<15:0>																0000
3570	DCH6CSIZ	31:16	—	—	—	—	—	—	—	—	—	—	—	—	—	—	—	—	0000
		15:0	CHCSIZ<15:0>																0000
3580	DCH6CPTR	31:16	—	—	—	—	—	—	—	—	—	—	—	—	—	—	—	—	0000
		15:0	CHCPTR<15:0>																0000
3590	DCH6DAT	31:16	—	—	—	—	—	—	—	—	—	—	—	—	—	—	—	—	0000
		15:0	—	—	—	—	—	—	—	—	CHPDAT<7:0>								0000
35A0	DCH7CON	31:16	—	—	—	—	—	—	—	—	—	—	—	—	—	—	—	—	0000
		15:0	CHBUSY	—	—	—	—	—	—	CHCHNS	CHEN	CHAED	CHCHN	CHAEN	—	CHEDET	CHPRI<1:0>		0000
35B0	DCH7ECON	31:16	—	—	—	—	—	—	—	—	CHAIRQ<7:0>								00FF
		15:0	CHSIRQ<7:0>								CFORCE	CABORT	PATEN	SIRQEN	AIRQEN	—	—	—	FF00
35C0	DCH7INT	31:16	—	—	—	—	—	—	—	—	CHSDIE	CHSHIE	CHDDIE	CHDHIE	CHBCIE	CHCCIE	CHTAIE	CHERIE	0000
		15:0	—	—	—	—	—	—	—	—	CHSDIF	CHSHIF	CHDDIF	CHDHIF	CHBCIF	CHCCIF	CHTAIF	CHERIF	0000
35D0	DCH7SSA	31:16	CHSSA<31:0>																0000
		15:0																	0000
35E0	DCH7DSA	31:16	CHDSA<31:0>																0000
		15:0																	0000

Legend: x = unknown value on Reset; — = unimplemented, read as '0'. Reset values are shown in hexadecimal.

Note 1: All registers in this table have corresponding CLR, SET and INV registers at their virtual addresses, plus offsets of 0x4, 0x8 and 0xC, respectively. See **Section 12.1.1 "CLR, SET and INV Registers"** for more information.

2: DMA channels 4-7 are not available on PIC32MX534/564/664/764 devices.

© 2009-2013 Microchip Technology Inc.

TABLE 4-19: DMA CHANNELS 0-7 REGISTER MAP (CONTINUED)

Virtual Address (BF88_#)	Register Name(1)	Bit Range	Bits																All Resets
			31/15	30/14	29/13	28/12	27/11	26/10	25/9	24/8	23/7	22/6	21/5	20/4	19/3	18/2	17/1	16/0	
35F0	DCH7SSIZ	31:16	—	—	—	—	—	—	—	—	—	—	—	—	—	—	—	—	0000
		15:0	CHSSIZ<15:0>																0000
3600	DCH7DSIZ	31:16	—	—	—	—	—	—	—	—	—	—	—	—	—	—	—	—	0000
		15:0	CHDSIZ<15:0>																0000
3610	DCH7SPTR	31:16	—	—	—	—	—	—	—	—	—	—	—	—	—	—	—	—	0000
		15:0	CHSPTR<15:0>																0000
3620	DCH7DPTR	31:16	—	—	—	—	—	—	—	—	—	—	—	—	—	—	—	—	0000
		15:0	CHDPTR<15:0>																0000
3630	DCH7CSIZ	31:16	—	—	—	—	—	—	—	—	—	—	—	—	—	—	—	—	0000
		15:0	CHCSIZ<15:0>																0000
3640	DCH7CPTR	31:16	—	—	—	—	—	—	—	—	—	—	—	—	—	—	—	—	0000
		15:0	CHCPTR<15:0>																0000
3650	DCH7DAT	31:16	—	—	—	—	—	—	—	—	—	—	—	—	—	—	—	—	0000
		15:0	—	—	—	—	—	—	—	—	CHPDAT<7:0>								0000

Legend: x = unknown value on Reset; — = unimplemented, read as '0'. Reset values are shown in hexadecimal.

Note 1: All registers in this table have corresponding CLR, SET and INV registers at their virtual addresses, plus offsets of 0x4, 0x8 and 0xC, respectively. See **Section 12.1.1 "CLR, SET and INV Registers"** for more information.

2: DMA channels 4-7 are not available on PIC32MX534/564/664/764 devices.

© 2009-2013 Microchip Technology Inc.

TABLE 4-20: COMPARATOR REGISTER MAP

Virtual Address (BF80_#)	Register Name(1)	Bit Range	Bits																All Resets
			31/15	30/14	29/13	28/12	27/11	26/10	25/9	24/8	23/7	22/6	21/5	20/4	19/3	18/2	17/1	16/0	
A000	CM1CON	31:16	—	—	—	—	—	—	—	—	—	—	—	—	—	—	—	—	0000
		15:0	ON	COE	CPOL	—	—	—	—	COUT	EVPOL<1:0>		—	CREF	—	—	CCH<1:0>		00C3
A010	CM2CON	31:16	—	—	—	—	—	—	—	—	—	—	—	—	—	—	—	—	0000
		15:0	ON	COE	CPOL	—	—	—	—	COUT	EVPOL<1:0>		—	CREF	—	—	CCH<1:0>		00C3
A060	CMSTAT	31:16	—	—	—	—	—	—	—	—	—	—	—	—	—	—	—	—	0000
		15:0	—	—	SIDL	—	—	—	—	—	—	—	—	—	—	—	C2OUT	C1OUT	0000

Legend: x = unknown value on Reset; — = unimplemented, read as '0'. Reset values are shown in hexadecimal.

Note 1: All registers in this table have corresponding CLR, SET and INV registers at their virtual addresses, plus offsets of 0x4, 0x8 and 0xC, respectively. See **Section 12.1.1 "CLR, SET and INV Registers"** for more information.

TABLE 4-21: COMPARATOR VOLTAGE REFERENCE REGISTER MAP

Virtual Address (BF80_#)	Register Name(1)	Bit Range	Bits																All Resets
			31/15	30/14	29/13	28/12	27/11	26/10	25/9	24/8	23/7	22/6	21/5	20/4	19/3	18/2	17/1	16/0	
9800	CVRCON	31:16	—	—	—	—	—	—	—	—	—	—	—	—	—	—	—	—	0000
		15:0	ON	—	—	—	—	VREFSEL(2)	BGSEL<1:0>(2)		—	CVROE	CVRR	CVRSS	CVR<3:0>				0100

Legend: x = unknown value on Reset; — = unimplemented, read as '0'. Reset values are shown in hexadecimal.

Note 1: All registers in this table have corresponding CLR, SET and INV registers at their virtual addresses, plus offsets of 0x4, 0x8 and 0xC, respectively. See **Section 12.1.1 "CLR, SET and INV Registers"** for more information.

2: These bits are not available on PIC32MX575/675/695/775/795 devices. On these devices, reset value for CVRCON is '0000'.

© 2009-2013 Microchip Technology Inc.

TABLE 4-22: FLASH CONTROLLER REGISTER MAP

Virtual Address (BF80_#)	Register Name	Bit Range	Bits 31/15	30/14	29/13	28/12	27/11	26/10	25/9	24/8	23/7	22/6	21/5	20/4	19/3	18/2	17/1	16/0	All Resets
F400	NVMCON(1)	31:16	—	—	—	—	—	—	—	—	—	—	—	—	—	—	—	—	0000
		15:0	WR	WREN	WRERR	LVDERR	LVDSTAT	—	—	—	—	—	—	—	NVMOP<3:0>				0000
F410	NVMKEY	31:16	NVMKEY<31:0>																0000
		15:0																	0000
F420	NVMADDR(1)	31:16	NVMADDR<31:0>																0000
		15:0																	0000
F430	NVMDATA	31:16	NVMDATA<31:0>																0000
		15:0																	0000
F440	NVMSRC ADDR	31:16	NVMSRCADDR<31:0>																0000
		15:0																	0000

Legend: x = unknown value on Reset; — = unimplemented, read as '0'. Reset values are shown in hexadecimal.

Note 1: This register has corresponding CLR, SET and INV registers at their virtual addresses, plus offsets of 0x4, 0x8 and 0xC, respectively. See **Section 12.1.1 "CLR, SET and INV Registers"** for more information.

TABLE 4-23: SYSTEM CONTROL REGISTER MAP

Virtual Address (BF80_#)	Register Name(1)	Bit Range	Bits 31/15	30/14	29/13	28/12	27/11	26/10	25/9	24/8	23/7	22/6	21/5	20/4	19/3	18/2	17/1	16/0	All Resets(2)
F000	OSCCON	31:16	—	—	PLLODIV<2:0>			FRCDIV<2:0>			—	SOSCRDY	—	PBDIV<1:0>		PLLMULT<2:0>			0000
		15:0	—	COSC<2:0>			—	NOSC<2:0>			CLKLOCK	ULOCK	SLOCK	SLPEN	CF	UFRCEN	SOSCEN	OSWEN	0000
F010	OSCTUN	31:16	—	—	—	—	—	—	—	—	—	—	—	—	—	—	—	—	0000
		15:0	—	—	—	—	—	—	—	—	—	—	TUN<5:0>						0000
0000	WDTCON	31:16	—	—	—	—	—	—	—	—	—	—	—	—	—	—	—	—	0000
		15:0	ON	—	—	—	—	—	—	—	—	SWDTPS<4:0>					—	WDTCLR	0000
F600	RCON	31:16	—	—	—	—	—	—	—	—	—	—	—	—	—	—	—	—	0000
		15:0	—	—	—	—	—	—	CMR	VREGS	EXTR	SWR	—	WDTO	SLEEP	IDLE	BOR	POR	0000
F610	RSWRST	31:16	—	—	—	—	—	—	—	—	—	—	—	—	—	—	—	—	0000
		15:0	—	—	—	—	—	—	—	—	—	—	—	—	—	—	—	SWRST	0000
F230	SYSKEY	31:16	SYSKEY<31:0>																0000
		15:0																	0000

Legend: x = unknown value on Reset; — = unimplemented, read as '0'. Reset values are shown in hexadecimal.

Note 1: All registers in this table have corresponding CLR, SET and INV registers at their virtual addresses, plus offsets of 0x4, 0x8 and 0xC, respectively. See **Section 12.1.1 "CLR, SET and INV Registers"** for more information.

2: Reset values are dependent on the DEVCFGx Configuration bits and the type of Reset.

© 2009-2013 Microchip Technology Inc.

TABLE 4-24: PORTA REGISTER MAP FOR PIC32MX534F064L, PIC32MX564F064L, PIC32MX564F128L, PIC32MX575F256L, PIC32MX575F512L, PIC32MX664F064L, PIC32MX664F128L, PIC32MX675F256L, PIC32MX675F512L, PIC32MX695F512L, PIC32MX764F128L, PIC32MX775F256L, PIC32MX775F512L AND PIC32MX795F512L DEVICES

Virtual Address (BF88_#)	Register Name(1)	Bit Range	Bits																All Resets
			31/15	30/14	29/13	28/12	27/11	26/10	25/9	24/8	23/7	22/6	21/5	20/4	19/3	18/2	17/1	16/0	
6000	TRISA	31:16	—	—	—	—	—	—	—	—	—	—	—	—	—	—	—	—	0000
		15:0	TRISA15	TRISA14	—	—	—	TRISA10	TRISA9	—	TRISA7	TRISA6	TRISA5	TRISA4	TRISA3	TRISA2	TRISA1	TRISA0	C6FF
6010	PORTA	31:16	—	—	—	—	—	—	—	—	—	—	—	—	—	—	—	—	0000
		15:0	RA15	RA14	—	—	—	RA10	RA9	—	RA7	RA6	RA5	RA4	RA3	RA2	RA1	RA0	xxxx
6020	LATA	31:16	—	—	—	—	—	—	—	—	—	—	—	—	—	—	—	—	0000
		15:0	LATA15	LATA14	—	—	—	LATA10	LATA9	—	LATA7	LATA6	LATA5	LATA4	LATA3	LATA2	LATA1	LATA0	xxxx
6030	ODCA	31:16	—	—	—	—	—	—	—	—	—	—	—	—	—	—	—	—	0000
		15:0	ODCA15	ODCA14	—	—	—	ODCA10	ODCA9	—	ODCA7	ODCA6	ODCA5	ODCA4	ODCA3	ODCA2	ODCA1	ODCA0	0000

Legend: x = unknown value on Reset; — = unimplemented, read as '0'. Reset values are shown in hexadecimal.

Note 1: All registers in this table have corresponding CLR, SET and INV registers at their virtual addresses, plus offsets of 0x4, 0x8 and 0xC, respectively. See **Section 12.1.1 "CLR, SET and INV Registers"** for more information.

TABLE 4-25: PORTB REGISTER MAP

Virtual Address (BF88_#)	Register Name(1)	Bit Range	Bits																All Resets
			31/15	30/14	29/13	28/12	27/11	26/10	25/9	24/8	23/7	22/6	21/5	20/4	19/3	18/2	17/1	16/0	
6040	TRISB	31:16	—	—	—	—	—	—	—	—	—	—	—	—	—	—	—	—	0000
		15:0	TRISB15	TRISB14	TRISB13	TRISB12	TRISB11	TRISB10	TRISB9	TRISB8	TRISB7	TRISB6	TRISB5	TRISB4	TRISB3	TRISB2	TRISB1	TRISB0	FFFF
6050	PORTB	31:16	—	—	—	—	—	—	—	—	—	—	—	—	—	—	—	—	0000
		15:0	RB15	RB14	RB13	RB12	RB11	RB10	RB9	RB8	RB7	RB6	RB5	RB4	RB3	RB2	RB1	RB0	xxxx
6060	LATB	31:16	—	—	—	—	—	—	—	—	—	—	—	—	—	—	—	—	0000
		15:0	LATB15	LATB14	LATB13	LATB12	LATB11	LATB10	LATB9	LATB8	LATB7	LATB6	LATB5	LATB4	LATB3	LATB2	LATB1	LATB0	xxxx
6070	ODCB	31:16	—	—	—	—	—	—	—	—	—	—	—	—	—	—	—	—	0000
		15:0	ODCB15	ODCB14	ODCB13	ODCB12	ODCB11	ODCB10	ODCB9	ODCB8	ODCB7	ODCB6	ODCB5	ODCB4	ODCB3	ODCB2	ODCB1	ODCB0	0000

Legend: x = unknown value on Reset; — = unimplemented, read as '0'. Reset values are shown in hexadecimal.

Note 1: All registers in this table have corresponding CLR, SET and INV registers at their virtual addresses, plus offsets of 0x4, 0x8 and 0xC, respectively. See **Section 12.1.1 "CLR, SET and INV Registers"** for more information.

© 2009-2013 Microchip Technology Inc.

TABLE 4-26: PORTC REGISTER MAP FOR PIC32MX534F064H, PIC32MX564F064H, PIC32MX564F128H, PIC32MX575F256H, PIC32MX575F512H, PIC32MX664F064H, PIC32MX664F128H, PIC32MX675F256H, PIC32MX675F512H, PIC32MX695F512H, PIC32MX764F128H, PIC32MX775F256H, PIC32MX775F512H AND PIC32MX795F512H DEVICES

Virtual Address (BF88_#)	Register Name(1)	Bit Range	Bits																All Resets
			31/15	30/14	29/13	28/12	27/11	26/10	25/9	24/8	23/7	22/6	21/5	20/4	19/3	18/2	17/1	16/0	
6080	TRISC	31:16	—	—	—	—	—	—	—	—	—	—	—	—	—	—	—	—	0000
		15:0	TRISC15	TRISC14	TRISC13	TRISC12	—	—	—	—	—	—	—	—	—	—	—	—	F000
6090	PORTC	31:16	—	—	—	—	—	—	—	—	—	—	—	—	—	—	—	—	0000
		15:0	RC15	RC14	RC13	RC12	—	—	—	—	—	—	—	—	—	—	—	—	xxxx
60A0	LATC	31:16	—	—	—	—	—	—	—	—	—	—	—	—	—	—	—	—	0000
		15:0	LATC15	LATC14	LATC13	LATC12	—	—	—	—	—	—	—	—	—	—	—	—	xxxx
60B0	ODCC	31:16	—	—	—	—	—	—	—	—	—	—	—	—	—	—	—	—	0000
		15:0	ODCC15	ODCC14	ODCC13	ODCC12	—	—	—	—	—	—	—	—	—	—	—	—	0000

Legend: x = unknown value on Reset; — = unimplemented, read as '0'. Reset values are shown in hexadecimal.

Note 1: All registers in this table have corresponding CLR, SET and INV registers at their virtual addresses, plus offsets of 0x4, 0x8 and 0xC, respectively. See **Section 12.1.1 "CLR, SET and INV Registers"** for more information.

TABLE 4-27: PORTC REGISTER MAP FOR PIC32MX534F064L, PIC32MX564F064L, PIC32MX564F128L, PIC32MX575F256L, PIC32MX575F512L, PIC32MX664F064L, PIC32MX664F128L, PIC32MX675F256L, PIC32MX675F512L, PIC32MX695F512L, PIC32MX764F128L, PIC32MX775F256L, PIC32MX775F512L AND PIC32MX795F512L DEVICES

Virtual Address (BF88_#)	Register Name(1)	Bit Range	Bits																All Resets
			31/15	30/14	29/13	28/12	27/11	26/10	25/9	24/8	23/7	22/6	21/5	20/4	19/3	18/2	17/1	16/0	
6080	TRISC	31:16	—	—	—	—	—	—	—	—	—	—	—	—	—	—	—	—	0000
		15:0	TRISC15	TRISC14	TRISC13	TRISC12	—	—	—	—	—	—	—	TRISC4	TRISC3	TRISC2	TRISC1	—	F00F
6090	PORTC	31:16	—	—	—	—	—	—	—	—	—	—	—	—	—	—	—	—	0000
		15:0	RC15	RC14	RC13	RC12	—	—	—	—	—	—	—	RC4	RC3	RC2	RC1	—	xxxx
60A0	LATC	31:16	—	—	—	—	—	—	—	—	—	—	—	—	—	—	—	—	0000
		15:0	LATC15	LATC14	LATC13	LATC12	—	—	—	—	—	—	—	LATC4	LATC3	LATC2	LATC1	—	xxxx
60B0	ODCC	31:16	—	—	—	—	—	—	—	—	—	—	—	—	—	—	—	—	0000
		15:0	ODCC15	ODCC14	ODCC13	ODCC12	—	—	—	—	—	—	—	ODCC4	ODCC3	ODCC2	ODCC1	—	0000

Legend: x = unknown value on Reset; — = unimplemented, read as '0'. Reset values are shown in hexadecimal.

Note 1: All registers in this table have corresponding CLR, SET and INV registers at their virtual addresses, plus offsets of 0x4, 0x8 and 0xC, respectively. See **Section 12.1.1 "CLR, SET and INV Registers"** for more information.

© 2009-2013 Microchip Technology Inc.

TABLE 4-28: PORTD REGISTER MAP FOR PIC32MX534F064H, PIC32MX564F064H, PIC32MX564F128H, PIC32MX575F256H, PIC32MX575F512H, PIC32MX664F064H, PIC32MX664F128H, PIC32MX675F256H, PIC32MX675F512H, PIC32MX695F512H, PIC32MX775F256H, PIC32MX775F512H AND PIC32MX795F512H DEVICES

Virtual Address (BF88_#)	Register Name(1)	Bit Range	Bits																All Resets
			31/15	30/14	29/13	28/12	27/11	26/10	25/9	24/8	23/7	22/6	21/5	20/4	19/3	18/2	17/1	16/0	
60C0	TRISD	31:16	—	—	—	—	—	—	—	—	—	—	—	—	—	—	—	—	0000
		15:0	—	—	—	—	TRISD11	TRISD10	TRISD9	TRISD8	TRISD7	TRISD6	TRISD5	TRISD4	TRISD3	TRISD2	TRISD1	TRISD0	0FFF
60D0	PORTD	31:16	—	—	—	—	—	—	—	—	—	—	—	—	—	—	—	—	0000
		15:0	—	—	—	—	RD11	RD10	RD9	RD8	RD7	RD6	RD5	RD4	RD3	RD2	RD1	RD0	xxxx
60E0	LATD	31:16	—	—	—	—	—	—	—	—	—	—	—	—	—	—	—	—	0000
		15:0	—	—	—	—	LATD11	LATD10	LATD9	LATD8	LATD7	LATD6	LATD5	LATD4	LATD3	LATD2	LATD1	LATD0	xxxx
60F0	ODCD	31:16	—	—	—	—	—	—	—	—	—	—	—	—	—	—	—	—	0000
		15:0	—	—	—	—	ODCD11	ODCD10	ODCD9	ODCD8	ODCD7	ODCD6	ODCD5	ODCD4	ODCD3	ODCD2	ODCD1	ODCD0	0000

Legend: x = unknown value on Reset; — = unimplemented, read as '0'. Reset values are shown in hexadecimal.

Note 1: All registers in this table have corresponding CLR, SET and INV registers at their virtual addresses, plus offsets of 0x4, 0x8 and 0xC, respectively. See **Section 12.1.1 "CLR, SET and INV Registers"** for more information.

TABLE 4-29: PORTD REGISTER MAP FOR PIC32MX534F064L, PIC32MX564F064L, PIC32MX564F128L, PIC32MX575F256L, PIC32MX575F512L, PIC32MX664F064L, PIC32MX664F128L, PIC32MX675F256L, PIC32MX675F512L, PIC32MX695F512L, PIC32MX764F128L, PIC32MX775F256L, PIC32MX775F512L AND PIC32MX795F512L DEVICES

Virtual Address (BF88_#)	Register Name(1)	Bit Range	Bits																All Resets
			31/15	30/14	29/13	28/12	27/11	26/10	25/9	24/8	23/7	22/6	21/5	20/4	19/3	18/2	17/1	16/0	
60C0	TRISD	31:16	—	—	—	—	—	—	—	—	—	—	—	—	—	—	—	—	0000
		15:0	TRISD15	TRISD14	TRISD13	TRISD12	TRISD11	TRISD10	TRISD9	TRISD8	TRISD7	TRISD6	TRISD5	TRISD4	TRISD3	TRISD2	TRISD1	TRISD0	FFFF
60D0	PORTD	31:16	—	—	—	—	—	—	—	—	—	—	—	—	—	—	—	—	0000
		15:0	RD15	RD14	RD13	RD12	RD11	RD10	RD9	RD8	RD7	RD6	RD5	RD4	RD3	RD2	RD1	RD0	xxxx
60E0	LATD	31:16	—	—	—	—	—	—	—	—	—	—	—	—	—	—	—	—	0000
		15:0	LAT15	LAT14	LAT13	LAT12	LATD11	LATD10	LATD9	LATD8	LATD7	LATD6	LATD5	LATD4	LATD3	LATD2	LATD1	LATD0	xxxx
60F0	ODCD	31:16	—	—	—	—	—	—	—	—	—	—	—	—	—	—	—	—	0000
		15:0	ODCD15	ODCD14	ODCD13	ODCD12	ODCD11	ODCD10	ODCD9	ODCD8	ODCD7	ODCD6	ODCD5	ODCD4	ODCD3	ODCD2	ODCD1	ODCD0	0000

Legend: x = unknown value on Reset; — = unimplemented, read as '0'. Reset values are shown in hexadecimal.

Note 1: All registers in this table have corresponding CLR, SET and INV registers at their virtual addresses, plus offsets of 0x4, 0x8 and 0xC, respectively. See **Section 12.1.1 "CLR, SET and INV Registers"** for more information.

© 2009-2013 Microchip Technology Inc.

TABLE 4-30: PORTE REGISTER MAP FOR PIC32MX534F064H, PIC32MX564F064H, PIC32MX564F128H, PIC32MX575F256H, PIC32MX575F512H, PIC32MX664F064H, PIC32MX664F128H, PIC32MX675F256H, PIC32MX675F512H, PIC32MX695F512H, PIC32MX775F256H, PIC32MX775F512H AND PIC32MX795F512H DEVICES

Virtual Address (BF88_#)	Register Name(1)	Bit Range	Bits																All Resets
			31/15	30/14	29/13	28/12	27/11	26/10	25/9	24/8	23/7	22/6	21/5	20/4	19/3	18/2	17/1	16/0	
6100	TRISE	31:16	—	—	—	—	—	—	—	—	—	—	—	—	—	—	—	—	0000
		15:0	—	—	—	—	—	—	—	—	TRISE7	TRISE6	TRISE5	TRISE4	TRISE3	TRISE2	TRISE1	TRISE0	00FF
6110	PORTE	31:16	—	—	—	—	—	—	—	—	—	—	—	—	—	—	—	—	0000
		15:0	—	—	—	—	—	—	—	—	RE7	RE6	RE5	RE4	RE3	RE2	RE1	RE0	xxxx
6120	LATE	31:16	—	—	—	—	—	—	—	—	—	—	—	—	—	—	—	—	0000
		15:0	—	—	—	—	—	—	—	—	LATE7	LATE6	LATE5	LATE4	LATE3	LATE2	LATE1	LATE0	xxxx
6130	ODCE	31:16	—	—	—	—	—	—	—	—	—	—	—	—	—	—	—	—	0000
		15:0	—	—	—	—	—	—	—	—	ODCE7	0DCE6	ODCE5	ODCE4	ODCE3	ODCE2	ODCE1	ODCE0	0000

Legend: x = unknown value on Reset; — = unimplemented, read as '0'. Reset values are shown in hexadecimal.

Note 1: All registers in this table have corresponding CLR, SET and INV registers at their virtual addresses, plus offsets of 0x4, 0x8 and 0xC, respectively. See **Section 12.1.1 "CLR, SET and INV Registers"** for more information.

TABLE 4-31: PORTE REGISTER MAP FOR PIC32MX534F064L, PIC32MX564F064L, PIC32MX564F128L, PIC32MX575F256L, PIC32MX575F512L, PIC32MX664F064L, PIC32MX664F128L, PIC32MX675F256L, PIC32MX675F512L, PIC32MX695F512L, PIC32MX764F128L, PIC32MX775F256L, PIC32MX775F512L AND PIC32MX795F512L DEVICES

Virtual Address (BF88_#)	Register Name(1)	Bit Range	Bits																All Resets
			31/15	30/14	29/13	28/12	27/11	26/10	25/9	24/8	23/7	22/6	21/5	20/4	19/3	18/2	17/1	16/0	
6100	TRISE	31:16	—	—	—	—	—	—	—	—	—	—	—	—	—	—	—	—	0000
		15:0	—	—	—	—	—	—	TRISE9	TRISE8	TRISE7	TRISE6	TRISE5	TRISE4	TRISE3	TRISE2	TRISE1	TRISE0	03FF
6110	PORTE	31:16	—	—	—	—	—	—	—	—	—	—	—	—	—	—	—	—	0000
		15:0	—	—	—	—	—	—	RE9	RE8	RE7	RE6	RE5	RE4	RE3	RE2	RE1	RE0	xxxx
6120	LATE	31:16	—	—	—	—	—	—	—	—	—	—	—	—	—	—	—	—	0000
		15:0	—	—	—	—	—	—	LATE9	LATE8	LATE7	LATE6	LATE5	LATE4	LATE3	LATE2	LATE1	LATE0	xxxx
6130	ODCE	31:16	—	—	—	—	—	—	—	—	—	—	—	—	—	—	—	—	0000
		15:0	—	—	—	—	—	—	ODCE9	ODCE8	ODCE7	0DCE6	ODCE5	ODCE4	ODCE3	ODCE2	ODCE1	ODCE0	0000

Legend: x = unknown value on Reset; — = unimplemented, read as '0'. Reset values are shown in hexadecimal.

Note 1: All registers in this table have corresponding CLR, SET and INV registers at their virtual addresses, plus offsets of 0x4, 0x8 and 0xC, respectively. See **Section 12.1.1 "CLR, SET and INV Registers"** for more information.

© 2009-2013 Microchip Technology Inc.

TABLE 4-32: PORTF REGISTER MAP FOR PIC32MX534F064H, PIC32MX564F064H, PIC32MX564F128H, PIC32MX575F256H, PIC32MX575F512H, PIC32MX664F064H, PIC32MX664F128H, PIC32MX675F256H, PIC32MX675F512H, PIC32MX695F512H, PIC32MX775F256H, PIC32MX775F512H AND PIC32MX795F512H DEVICES

Virtual Address (BF88_#)	Register Name(1)	Bit Range	Bits																All Resets
			31/15	30/14	29/13	28/12	27/11	26/10	25/9	24/8	23/7	22/6	21/5	20/4	19/3	18/2	17/1	16/0	
6140	TRISF	31:16	—	—	—	—	—	—	—	—	—	—	—	—	—	—	—	—	0000
		15:0	—	—	—	—	—	—	—	—	—	—	TRISF5	TRISF4	TRISF3	—	TRISF1	TRISF0	003B
6150	PORTF	31:16	—	—	—	—	—	—	—	—	—	—	—	—	—	—	—	—	0000
		15:0	—	—	—	—	—	—	—	—	—	—	RF5	RF4	RF3	—	RF1	RF0	xxxx
6160	LATF	31:16	—	—	—	—	—	—	—	—	—	—	—	—	—	—	—	—	0000
		15:0	—	—	—	—	—	—	—	—	—	—	LATF5	LATF4	LATF3	—	LATF1	LATF0	xxxx
6170	ODCF	31:16	—	—	—	—	—	—	—	—	—	—	—	—	—	—	—	—	0000
		15:0	—	—	—	—	—	—	—	—	—	—	ODCF5	ODCF4	ODCF3	—	ODCF1	ODCF0	0000

Legend: x = unknown value on Reset; — = unimplemented, read as '0'. Reset values are shown in hexadecimal.

Note 1: All registers in this table have corresponding CLR, SET and INV registers at their virtual addresses, plus offsets of 0x4, 0x8 and 0xC, respectively. See **Section 12.1.1 "CLR, SET and INV Registers"** for more information.

TABLE 4-33: PORTF REGISTER MAP PIC32MX534F064L, PIC32MX564F064L, PIC32MX564F128L, PIC32MX575F256L, PIC32MX575F512L, PIC32MX664F064L, PIC32MX664F128L, PIC32MX675F256L, PIC32MX675F512L, PIC32MX695F512L, PIC32MX775F256L, PIC32MX764F128L, PIC32MX775F512L AND PIC32MX795F512L DEVICES

Virtual Address (BF88_#)	Register Name(1)	Bit Range	Bits																All Resets
			31/15	30/14	29/13	28/12	27/11	26/10	25/9	24/8	23/7	22/6	21/5	20/4	19/3	18/2	17/1	16/0	
6140	TRISF	31:16	—	—	—	—	—	—	—	—	—	—	—	—	—	—	—	—	0000
		15:0	—	—	TRISF13	TRISF12	—	—	—	TRISF8	—	—	TRISF5	TRISF4	TRISF3	TRISF2	TRISF1	TRISF0	313F
6150	PORTF	31:16	—	—	—	—	—	—	—	—	—	—	—	—	—	—	—	—	0000
		15:0	—	—	RF13	RF12	—	—	—	RF8	—	—	RF5	RF4	RF3	RF2	RF1	RF0	xxxx
6160	LATF	31:16	—	—	—	—	—	—	—	—	—	—	—	—	—	—	—	—	0000
		15:0	—	—	LATF13	LATF12	—	—	—	LATF8	—	—	LATF5	LATF4	LATF3	LATF2	LATF1	LATF0	xxxx
6170	ODCF	31:16	—	—	—	—	—	—	—	—	—	—	—	—	—	—	—	—	0000
		15:0	—	—	ODCF13	ODCF12	—	—	—	ODCF8	—	—	ODCF5	ODCF4	ODCF3	ODCF2	ODCF1	ODCF0	0000

Legend: x = unknown value on Reset; — = unimplemented, read as '0'. Reset values are shown in hexadecimal.

Note 1: All registers in this table have corresponding CLR, SET and INV registers at their virtual addresses, plus offsets of 0x4, 0x8 and 0xC, respectively. See **Section 12.1.1 "CLR, SET and INV Registers"** for more information.

© 2009-2013 Microchip Technology Inc.

TABLE 4-34: PORTG REGISTER MAP FOR PIC32MX534F064H, PIC32MX564F064H, PIC32MX564F128H, PIC32MX575F256H, PIC32MX575F512H, PIC32MX664F064H, PIC32MX664F128H, PIC32MX675F256H, PIC32MX675F512H, PIC32MX695F512H, PIC32MX764F128H, PIC32MX775F256H, PIC32MX775F512H AND PIC32MX795F512H DEVICES

Virtual Address (BF88_#)	Register Name(1)	Bit Range	Bits																All Resets
			31/15	30/14	29/13	28/12	27/11	26/10	25/9	24/8	23/7	22/6	21/5	20/4	19/3	18/2	17/1	16/0	
6180	TRISG	31:16	—	—	—	—	—	—	—	—	—	—	—	—	—	—	—	—	0000
		15:0	—	—	—	—	—	—	TRISG9	TRISG8	TRISG7	TRISG6	—	—	TRISG3	TRISG2	—	—	03CC
6190	PORTG	31:16	—	—	—	—	—	—	—	—	—	—	—	—	—	—	—	—	0000
		15:0	—	—	—	—	—	—	RG9	RG8	RG7	RG6	—	—	RG3	RG2	—	—	xxxx
61A0	LATG	31:16	—	—	—	—	—	—	—	—	—	—	—	—	—	—	—	—	0000
		15:0	—	—	—	—	—	—	LATG9	LATG8	LATG7	LATG6	—	—	LATG3	LATG2	—	—	xxxx
61B0	ODCG	31:16	—	—	—	—	—	—	—	—	—	—	—	—	—	—	—	—	0000
		15:0	—	—	—	—	—	—	ODCG9	ODCG8	ODCG7	ODCG6	—	—	ODCG3	ODCG2	—	—	0000

Legend: x = unknown value on Reset; — = unimplemented, read as '0'. Reset values are shown in hexadecimal.

Note 1: All registers in this table have corresponding CLR, SET and INV registers at their virtual addresses, plus offsets of 0x4, 0x8 and 0xC, respectively. See **Section 12.1.1 "CLR, SET and INV Registers"** for more information.

TABLE 4-35: PORTG REGISTER MAP FOR PIC32MX534F064L, PIC32MX564F064L, PIC32MX564F128L, PIC32MX575F256L, PIC32MX575F512L, PIC32MX664F064L, PIC32MX664F128L, PIC32MX675F256L, PIC32MX675F512L, PIC32MX695F512L, PIC32MX764F128L, PIC32MX775F256L, PIC32MX775F512L AND PIC32MX795F512L DEVICES

Virtual Address (BF88_#)	Register Name(1)	Bit Range	Bits																All Resets
			31/15	30/14	29/13	28/12	27/11	26/10	25/9	24/8	23/7	22/6	21/5	20/4	19/3	18/2	17/1	16/0	
6180	TRISG	31:16	—	—	—	—	—	—	—	—	—	—	—	—	—	—	—	—	0000
		15:0	TRISG15	TRISG14	TRISG13	TRISG12	—	—	TRISG9	TRISG8	TRISG7	TRISG6	—	—	TRISG3	TRISG2	TRISG1	TRISG0	F3CF
6190	PORTG	31:16	—	—	—	—	—	—	—	—	—	—	—	—	—	—	—	—	0000
		15:0	RG15	RG14	RG13	RG12	—	—	RG9	RG8	RG7	RG6	—	—	RG3	RG2	RG1	RG0	xxxx
61A0	LATG	31:16	—	—	—	—	—	—	—	—	—	—	—	—	—	—	—	—	0000
		15:0	LATG15	LATG14	LATG13	LATG12	—	—	LATG9	LATG8	LATG7	LATG6	—	—	LATG3	LATG2	LATG1	LATG0	xxxx
61B0	ODCG	31:16	—	—	—	—	—	—	—	—	—	—	—	—	—	—	—	—	0000
		15:0	ODCG15	ODCG14	ODCG13	ODCG12	—	—	ODCG9	ODCG8	ODCG7	ODCG6	—	—	ODCG3	ODCG2	ODCG1	ODCG0	0000

Legend: x = unknown value on Reset; — = unimplemented, read as '0'. Reset values are shown in hexadecimal.

Note 1: All registers in this table have corresponding CLR, SET and INV registers at their virtual addresses, plus offsets of 0x4, 0x8 and 0xC, respectively. See **Section 12.1.1 "CLR, SET and INV Registers"** for more information.

© 2009-2013 Microchip Technology Inc.

TABLE 4-36: CHANGE NOTICE AND PULL-UP REGISTER MAP FOR PIC32MX534F064L, PIC32MX564F064L, PIC32MX564F128L, PIC32MX575F256L, PIC32MX575F512L, PIC32MX664F064L, PIC32MX664F128L, PIC32MX675F256L, PIC32MX675F512L, PIC32MX695F512L, PIC32MX764F128L, PIC32MX775F256L, PIC32MX775F512 AND PIC32MX795F512L DEVICES

Virtual Address (BF88_#)	Register Name(1)	Bit Range	Bits																All Resets
			31/15	30/14	29/13	28/12	27/11	26/10	25/9	24/8	23/7	22/6	21/5	20/4	19/3	18/2	17/1	16/0	
61C0	CNCON	31:16	—	—	—	—	—	—	—	—	—	—	—	—	—	—	—	—	0000
		15:0	ON	—	SIDL	—	—	—	—	—	—	—	—	—	—	—	—	—	0000
61D0	CNEN	31:16	—	—	—	—	—	—	—	—	—	—	CNEN21	CNEN20	CNEN19	CNEN18	CNEN17	CNEN16	0000
		15:0	CNEN15	CNEN14	CNEN13	CNEN12	CNEN11	CNEN10	CNEN9	CNEN8	CNEN7	CNEN6	CNEN5	CNEN4	CNEN3	CNEN2	CNEN1	CNEN0	0000
61E0	CNPUE	31:16	—	—	—	—	—	—	—	—	—	—	CNPUE21	CNPUE20	CNPUE19	CNPUE18	CNPUE17	CNPUE16	0000
		15:0	CNPUE15	CNPUE14	CNPUE13	CNPUE12	CNPUE11	CNPUE10	CNPUE9	CNPUE8	CNPUE7	CNPUE6	CNPUE5	CNPUE4	CNPUE3	CNPUE2	CNPUE1	CNPUE0	0000

Legend: x = unknown value on Reset; — = unimplemented, read as '0'. Reset values are shown in hexadecimal.

Note 1: All registers in this table have corresponding CLR, SET and INV registers at their virtual addresses, plus offsets of 0x4, 0x8 and 0xC, respectively. See **Section 12.1.1 "CLR, SET and INV Registers"** for more information.

TABLE 4-37: CHANGE NOTICE AND PULL-UP REGISTER MAP FOR PIC32MX575F256H, PIC32MX575F512H, PIC32MX675F256H, PIC32MX675F512H, PIC32MX695F512H, PIC32MX775F256H, PIC32MX775F512H AND PIC32MX795F512H DEVICES

Virtual Address (BF88_#)	Register Name(1)	Bit Range	Bits																All Resets
			31/15	30/14	29/13	28/12	27/11	26/10	25/9	24/8	23/7	22/6	21/5	20/4	19/3	18/2	17/1	16/0	
61C0	CNCON	31:16	—	—	—	—	—	—	—	—	—	—	—	—	—	—	—	—	0000
		15:0	ON	—	SIDL	—	—	—	—	—	—	—	—	—	—	—	—	—	0000
61D0	CNEN	31:16	—	—	—	—	—	—	—	—	—	—	—	—	—	CNEN18	CNEN17	CNEN16	0000
		15:0	CNEN15	CNEN14	CNEN13	CNEN12	CNEN11	CNEN10	CNEN9	CNEN8	CNEN7	CNEN6	CNEN5	CNEN4	CNEN3	CNEN2	CNEN1	CNEN0	0000
61E0	CNPUE	31:16	—	—	—	—	—	—	—	—	—	—	—	—	—	CNPUE18	CNPUE17	CNPUE16	0000
		15:0	CNPUE15	CNPUE14	CNPUE13	CNPUE12	CNPUE11	CNPUE10	CNPUE9	CNPUE8	CNPUE7	CNPUE6	CNPUE5	CNPUE4	CNPUE3	CNPUE2	CNPUE1	CNPUE0	0000

Legend: x = unknown value on Reset; — = unimplemented, read as '0'. Reset values are shown in hexadecimal.

Note 1: All registers in this table have corresponding CLR, SET and INV registers at their virtual addresses, plus offsets of 0x4, 0x8 and 0xC, respectively. See **Section 12.1.1 "CLR, SET and INV Registers"** for more information.

© 2009-2013 Microchip Technology Inc.

TABLE 4-38: PARALLEL MASTER PORT REGISTER MAP

Virtual Address (BF80_#)	Register Name(1)	Bit Range	Bits 31/15	30/14	29/13	28/12	27/11	26/10	25/9	24/8	23/7	22/6	21/5	20/4	19/3	18/2	17/1	16/0	All Resets
7000	PMCON	31:16	—	—	—	—	—	—	—	—	—	—	—	—	—	—	—	—	0000
		15:0	ON	—	SIDL	ADRMUX<1:0>		PMPTTL	PTWREN	PTRDEN	CSF<1:0>		ALP	CS2P	CS1P	—	WRSP	RDSP	0000
7010	PMMODE	31:16	—	—	—	—	—	—	—	—	—	—	—	—	—	—	—	—	0000
		15:0	BUSY	IRQM<1:0>		INCM<1:0>		MODE16	MODE<1:0>		WAITB<1:0>		WAITM<3:0>				WAITE<1:0>		0000
7020	PMADDR	31:16	—	—	—	—	—	—	—	—	—	—	—	—	—	—	—	—	0000
		15:0	CS2EN/A15	CS1EN/A14	ADDR<13:0>														0000
7030	PMDOUT	31:16	DATAOUT<31:0>																0000
		15:0																	0000
7040	PMDIN	31:16	DATAIN<31:0>																0000
		15:0																	0000
7050	PMAEN	31:16	—	—	—	—	—	—	—	—	—	—	—	—	—	—	—	—	0000
		15:0	PTEN<15:0>																0000
7060	PMSTAT	31:16	—	—	—	—	—	—	—	—	—	—	—	—	—	—	—	—	0000
		15:0	IBF	IBOV	—	—	IB3F	IB2F	IB1F	IB0F	OBE	OBUF	—	—	OB3E	OB2E	OB1E	OB0E	008F

Legend: x = unknown value on Reset; — = unimplemented, read as '0'. Reset values are shown in hexadecimal.

Note 1: All registers in this table have corresponding CLR, SET and INV registers at their virtual addresses, plus offsets of 0x4, 0x8 and 0xC, respectively. See **Section 12.1.1 "CLR, SET and INV Registers"** for more information.

TABLE 4-39: PROGRAMMING AND DIAGNOSTICS REGISTER MAP

Virtual Address (BF80_#)	Register Name	Bit Range	Bits 31/15	30/14	29/13	28/12	27/11	26/10	25/9	24/8	23/7	22/6	21/5	20/4	19/3	18/2	17/1	16/0	All Resets
F200	DDPCON	31:16	—	—	—	—	—	—	—	—	—	—	—	—	—	—	—	—	0000
		15:0	—	—	—	—	—	—	—	—	—	—	—	—	JTAGEN	TROEN	—	TDOEN	0008

Legend: x = unknown value on Reset; — = unimplemented, read as '0'. Reset values are shown in hexadecimal.

© 2009-2013 Microchip Technology Inc.

TABLE 4-40: PREFETCH REGISTER MAP

Virtual Address (BF88_#)	Register Name	Bit Range	Bits 31/15	30/14	29/13	28/12	27/11	26/10	25/9	24/8	23/7	22/6	21/5	20/4	19/3	18/2	17/1	16/0	All Resets
4000	CHECON(1,2)	31:16	—	—	—	—	—	—	—	—	—	—	—	—	—	—	—	CHECOH	0000
		15:0	—	—	—	—	—	—	DCSZ<1:0>		—	—	PREFEN<1:0>		—	PFMWS<2:0>			0007
4010	CHEACC(1)	31:16	CHEWEN	—	—	—	—	—	—	—	—	—	—	—	—	—	—	—	0000
		15:0	—	—	—	—	—	—	—	—	—	—	—	—	CHEIDX<3:0>				0000
4020	CHETAG(1)	31:16	LTAGBOOT	—	—	—	—	—	—	—	LTAG<23:16>								00xx
		15:0	LTAG<15:4>												LVALID	LLOCK	LTYPE	—	xxx2
4030	CHEMSK(1)	31:16	—	—	—	—	—	—	—	—	—	—	—	—	—	—	—	—	0000
		15:0	LMASK<15:5>											—	—	—	—	—	0000
4040	CHEW0	31:16	CHEW0<31:0>																xxxx
		15:0																	xxxx
4050	CHEW1	31:16	CHEW1<31:0>																xxxx
		15:0																	xxxx
4060	CHEW2	31:16	CHEW2<31:0>																xxxx
		15:0																	xxxx
4070	CHEW3	31:16	CHEW3<31:0>																xxxx
		15:0																	xxxx
4080	CHELRU	31:16	—	—	—	—	—	—	—	CHELRU<24:16>									0000
		15:0	CHELRU<15:0>																0000
4090	CHEHIT	31:16	CHEHIT<31:0>																xxxx
		15:0																	xxxx
40A0	CHEMIS	31:16	CHEMIS<31:0>																xxxx
		15:0																	xxxx
40C0	CHEPFABT	31:16	CHEPFABT<31:0>																xxxx
		15:0																	xxxx

Legend: x = unknown value on Reset; — = unimplemented, read as '0'. Reset values are shown in hexadecimal.

Note 1: This register has corresponding CLR, SET and INV registers at its virtual address, plus an offset of 0x4, 0x8 and 0xC, respectively. See **Section 12.1.1 "CLR, SET and INV Registers"** for more information.

2: Reset value is dependent on DEVCFGx configuration.

© 2009-2013 Microchip Technology Inc.

TABLE 4-41: RTCC REGISTER MAP

Virtual Address (BF80_#)	Register Name(1)	Bit Range	Bits 31/15	30/14	29/13	28/12	27/11	26/10	25/9	24/8	23/7	22/6	21/5	20/4	19/3	18/2	17/1	16/0	All Resets
0200	RTCCON	31:16	—	—	—	—	—	—	CAL<9:0>										0000
		15:0	ON	—	SIDL	—	—	—	—	—	RTSECSEL	RTCCLKON	—	—	RTCWREN	RTCSYNC	HALFSEC	RTCOE	0000
0210	RTCALRM	31:16	—	—	—	—	—	—	—	—	—	—	—	—	—	—	—	—	0000
		15:0	ALRMEN	CHIME	PIV	ALRMSYNC	AMASK<3:0>				ARPT<7:0>								0000
0220	RTCTIME	31:16	HR10<3:0>				HR01<3:0>				MIN10<3:0>				MIN01<3:0>				xxxx
		15:0	SEC10<3:0>				SEC01<3:0>				—	—	—	—	—	—	—	—	xx00
0230	RTCDATE	31:16	YEAR10<3:0>				YEAR01<3:0>				MONTH10<3:0>				MONTH01<3:0>				xxxx
		15:0	DAY10<3:0>				DAY01<3:0>				—	—	—	—	WDAY01<3:0>				xx00
0240	ALRMTIME	31:16	HR10<3:0>				HR01<3:0>				MIN10<3:0>				MIN01<3:0>				xxxx
		15:0	SEC10<3:0>				SEC01<3:0>				—	—	—	—	—	—	—	—	xx00
0250	ALRMDATE	31:16	—	—	—	—	—	—	—	—	MONTH10<3:0>				MONTH01<3:0>				00xx
		15:0	DAY10<3:0>				DAY01<3:0>				—	—	—	—	WDAY01<3:0>				xx0x

Legend: x = unknown value on Reset; — = unimplemented, read as '0'. Reset values are shown in hexadecimal.

Note 1: All registers in this table have corresponding CLR, SET and INV registers at its virtual address, plus an offset of 0x4, 0x8 and 0xC, respectively. See **Section 12.1.1 "CLR, SET and INV Registers"** for more information.

© 2009-2013 Microchip Technology Inc.

TABLE 4-42: DEVCFG: DEVICE CONFIGURATION WORD SUMMARY

Virtual Address (BFC0_#)	Register Name	Bit Range	Bits 31/15	30/14	29/13	28/12	27/11	26/10	25/9	24/8	23/7	22/6	21/5	20/4	19/3	18/2	17/1	16/0	All Resets
2FF0	DEVCFG3	31:16	FVBUSONIO	FUSBIDIO	—	—	—	FCANIO	FETHIO	FMIIEN	—	—	—	—	—	FSRSSEL<2:0>			xxxx
		15:0	USERID<15:0>																xxxx
2FF4	DEVCFG2	31:16	—	—	—	—	—	—	—	—	—	—	—	—	—	FPLLODIV<2:0>			xxxx
		15:0	UPLLEN	—	—	—	—	UPLLIDIV<2:0>			—	FPLLMUL<2:0>			—	FPLLIDIV<2:0>			xxxx
2FF8	DEVCFG1	31:16	—	—	—	—	—	—	—	—	FWDTEN	—	—	WDTPS<4:0>					xxxx
		15:0	FCKSM<1:0>		FPBDIV<1:0>		—	OSCIOFNC	POSCMOD<1:0>		IESO	—	FSOSCEN	—	—	FNOSC<2:0>			xxxx
2FFC	DEVCFG0	31:16	—	—	—	CP	—	—	—	BWP	—	—	—	—	PWP<7:4>				xxxx
		15:0	PWP<3:0>				—	—	—	—	—	—	—	—	ICESEL	—	DEBUG<1:0>		xxxx

Legend: x = unknown value on Reset; — = unimplemented, read as '0'. Reset values are shown in hexadecimal.

TABLE 4-43: DEVICE AND REVISION ID SUMMARY

Virtual Address (BF80_#)	Register Name	Bit Range	Bits 31/15	30/14	29/13	28/12	27/11	26/10	25/9	24/8	23/7	22/6	21/5	20/4	19/3	18/2	17/1	16/0	All Resets(1)
F220	DEVID	31:16	VER<3:0>				DEVID<27:16>												xxxx
		15:0	DEVID<15:0>																xxxx

Legend: x = unknown value on Reset; — = unimplemented, read as '0'. Reset values are shown in hexadecimal.

Note 1: Reset values are dependent on the device variant. Refer to *"PIC32MX5XX/6XX/7XX Family Silicon Errata and Data Sheet Clarification"* (DS80000480) for more information.

© 2009-2013 Microchip Technology Inc.

TABLE 4-44: USB REGISTER MAP

Virtual Address (BF88_#)	Register Name[1]	Bit Range	Bits 31/15	30/14	29/13	28/12	27/11	26/10	25/9	24/8	23/7	22/6	21/5	20/4	19/3	18/2	17/1	16/0	All Resets
5040	U1OTGIR[2]	31:16	—	—	—	—	—	—	—	—	—	—	—	—	—	—	—	—	0000
		15:0	—	—	—	—	—	—	—	—	IDIF	T1MSECIF	LSTATEIF	ACTVIF	SESVDIF	SESENDIF	—	VBUSVDIF	0000
5050	U1OTGIE	31:16	—	—	—	—	—	—	—	—	—	—	—	—	—	—	—	—	0000
		15:0	—	—	—	—	—	—	—	—	IDIE	T1MSECIE	LSTATEIE	ACTVIE	SESVDIE	SESENDIE	—	VBUSVDIE	0000
5060	U1OTGSTAT[3]	31:16	—	—	—	—	—	—	—	—	—	—	—	—	—	—	—	—	0000
		15:0	—	—	—	—	—	—	—	—	ID	—	LSTATE	—	SESVD	SESEND	—	VBUSVD	0000
5070	U1OTGCON	31:16	—	—	—	—	—	—	—	—	—	—	—	—	—	—	—	—	0000
		15:0	—	—	—	—	—	—	—	—	DPPULUP	DMPULUP	DPPULDWN	DMPULDWN	VBUSON	OTGEN	VBUSCHG	VBUSDIS	0000
5080	U1PWRC	31:16	—	—	—	—	—	—	—	—	—	—	—	—	—	—	—	—	0000
		15:0	—	—	—	—	—	—	—	—	UACTPND[4]	—	—	USLPGRD	USBBUSY	—	USUSPEND	USBPWR	0000
5200	U1IR[2]	31:16	—	—	—	—	—	—	—	—	—	—	—	—	—	—	—	—	0000
		15:0	—	—	—	—	—	—	—	—	STALLIF	ATTACHIF	RESUMEIF	IDLEIF	TRNIF	SOFIF	UERRIF	URSTIF	0000
																		DETACHIF	0000
5210	U1IE	31:16	—	—	—	—	—	—	—	—	—	—	—	—	—	—	—	—	0000
		15:0	—	—	—	—	—	—	—	—	STALLIE	ATTACHIE	RESUMEIE	IDLEIE	TRNIE	SOFIE	UERRIE	URSTIE	0000
																		DETACHIE	0000
5220	U1EIR[2]	31:16	—	—	—	—	—	—	—	—	—	—	—	—	—	—	—	—	0000
		15:0	—	—	—	—	—	—	—	—	BTSEF	BMXEF	DMAEF	BTOEF	DFN8EF	CRC16EF	CRC5EF	PIDEF	0000
																	EOFEF		0000
5230	U1EIE	31:16	—	—	—	—	—	—	—	—	—	—	—	—	—	—	—	—	0000
		15:0	—	—	—	—	—	—	—	—	BTSEE	BMXEE	DMAEE	BTOEE	DFN8EE	CRC16EE	CRC5EE	PIDEE	0000
																	EOFEE		0000
5240	U1STAT[3]	31:16	—	—	—	—	—	—	—	—	—	—	—	—	—	—	—	—	0000
		15:0	—	—	—	—	—	—	—	—	ENDPT<3:0>[4]				DIR	PPBI	—	—	0000
5250	U1CON	31:16	—	—	—	—	—	—	—	—	—	—	—	—	—	—	—	—	0000
		15:0	—	—	—	—	—	—	—	—	JSTATE[4]	SE0[4]	PKTDIS	USBRST	HOSTEN	RESUME	PPBRST	USBEN	0000
													TOKBUSY					SOFEN	0000
5260	U1ADDR	31:16	—	—	—	—	—	—	—	—	—	—	—	—	—	—	—	—	0000
		15:0	—	—	—	—	—	—	—	—	LSPDEN	DEVADDR<6:0>							0000
5270	U1BDTP1	31:16	—	—	—	—	—	—	—	—	—	—	—	—	—	—	—	—	0000
		15:0	—	—	—	—	—	—	—	—	BDTPTRL<7:1>							—	0000
5280	U1FRML[3]	31:16	—	—	—	—	—	—	—	—	—	—	—	—	—	—	—	—	0000
		15:0	—	—	—	—	—	—	—	—	FRML<7:0>								0000

Legend: x = unknown value on Reset; — = unimplemented, read as '0'. Reset values are shown in hexadecimal.

Note 1: All registers in this table (except as noted) have corresponding CLR, SET and INV registers at its virtual address, plus an offset of 0x4, 0x8 and 0xC respectively. See **Section 12.1.1 "CLR, SET and INV Registers"** for more information.

2: This register does not have associated SET and INV registers.

3: This register does not have associated CLR, SET and INV registers.

4: Reset value for this bit is undefined.

© 2009-2013 Microchip Technology Inc.

TABLE 4-44: USB REGISTER MAP (CONTINUED)

Virtual Address (BF88_#)	Register Name[1]	Bit Range	Bits 31/15	30/14	29/13	28/12	27/11	26/10	25/9	24/8	23/7	22/6	21/5	20/4	19/3	18/2	17/1	16/0	All Resets
5290	U1FRMH[3]	31:16	—	—	—	—	—	—	—	—	—	—	—	—	—	—	—	—	0000
		15:0	—	—	—	—	—	—	—	—	—	—	—	—	—	FRMH<2:0>			0000
52A0	U1TOK	31:16	—	—	—	—	—	—	—	—	—	—	—	—	—	—	—	—	0000
		15:0	—	—	—	—	—	—	—	—	PID<3:0>				EP<3:0>				0000
52B0	U1SOF	31:16	—	—	—	—	—	—	—	—	—	—	—	—	—	—	—	—	0000
		15:0	—	—	—	—	—	—	—	—	CNT<7:0>								0000
52C0	U1BDTP2	31:16	—	—	—	—	—	—	—	—	—	—	—	—	—	—	—	—	0000
		15:0	—	—	—	—	—	—	—	—	BDTPTRH<7:0>								0000
52D0	U1BDTP3	31:16	—	—	—	—	—	—	—	—	—	—	—	—	—	—	—	—	0000
		15:0	—	—	—	—	—	—	—	—	BDTPTRU<7:0>								0000
52E0	U1CNFG1	31:16	—	—	—	—	—	—	—	—	—	—	—	—	—	—	—	—	0000
		15:0	—	—	—	—	—	—	—	—	UTEYE	UOEMON	—	USBSIDL	—	—	—	UASUSPND	0001
5300	U1EP0	31:16	—	—	—	—	—	—	—	—	—	—	—	—	—	—	—	—	0000
		15:0	—	—	—	—	—	—	—	—	LSPD	RETRYDIS	—	EPCONDIS	EPRXEN	EPTXEN	EPSTALL	EPHSHK	0000
5310	U1EP1	31:16	—	—	—	—	—	—	—	—	—	—	—	—	—	—	—	—	0000
		15:0	—	—	—	—	—	—	—	—	—	—	—	EPCONDIS	EPRXEN	EPTXEN	EPSTALL	EPHSHK	0000
5320	U1EP2	31:16	—	—	—	—	—	—	—	—	—	—	—	—	—	—	—	—	0000
		15:0	—	—	—	—	—	—	—	—	—	—	—	EPCONDIS	EPRXEN	EPTXEN	EPSTALL	EPHSHK	0000
5330	U1EP3	31:16	—	—	—	—	—	—	—	—	—	—	—	—	—	—	—	—	0000
		15:0	—	—	—	—	—	—	—	—	—	—	—	EPCONDIS	EPRXEN	EPTXEN	EPSTALL	EPHSHK	0000
5340	U1EP4	31:16	—	—	—	—	—	—	—	—	—	—	—	—	—	—	—	—	0000
		15:0	—	—	—	—	—	—	—	—	—	—	—	EPCONDIS	EPRXEN	EPTXEN	EPSTALL	EPHSHK	0000
5350	U1EP5	31:16	—	—	—	—	—	—	—	—	—	—	—	—	—	—	—	—	0000
		15:0	—	—	—	—	—	—	—	—	—	—	—	EPCONDIS	EPRXEN	EPTXEN	EPSTALL	EPHSHK	0000
5360	U1EP6	31:16	—	—	—	—	—	—	—	—	—	—	—	—	—	—	—	—	0000
		15:0	—	—	—	—	—	—	—	—	—	—	—	EPCONDIS	EPRXEN	EPTXEN	EPSTALL	EPHSHK	0000
5370	U1EP7	31:16	—	—	—	—	—	—	—	—	—	—	—	—	—	—	—	—	0000
		15:0	—	—	—	—	—	—	—	—	—	—	—	EPCONDIS	EPRXEN	EPTXEN	EPSTALL	EPHSHK	0000
5380	U1EP8	31:16	—	—	—	—	—	—	—	—	—	—	—	—	—	—	—	—	0000
		15:0	—	—	—	—	—	—	—	—	—	—	—	EPCONDIS	EPRXEN	EPTXEN	EPSTALL	EPHSHK	0000
5390	U1EP9	31:16	—	—	—	—	—	—	—	—	—	—	—	—	—	—	—	—	0000
		15:0	—	—	—	—	—	—	—	—	—	—	—	EPCONDIS	EPRXEN	EPTXEN	EPSTALL	EPHSHK	0000
53A0	U1EP10	31:16	—	—	—	—	—	—	—	—	—	—	—	—	—	—	—	—	0000
		15:0	—	—	—	—	—	—	—	—	—	—	—	EPCONDIS	EPRXEN	EPTXEN	EPSTALL	EPHSHK	0000

Legend: x = unknown value on Reset; — = unimplemented, read as '0'. Reset values are shown in hexadecimal.

Note 1: All registers in this table (except as noted) have corresponding CLR, SET and INV registers at its virtual address, plus an offset of 0x4, 0x8 and 0xC respectively. See **Section 12.1.1 "CLR, SET and INV Registers"** for more information.

2: This register does not have associated SET and INV registers.

3: This register does not have associated CLR, SET and INV registers.

4: Reset value for this bit is undefined.

© 2009-2013 Microchip Technology Inc.

TABLE 4-44: USB REGISTER MAP (CONTINUED)

Virtual Address (BF88_#)	Register Name(1)	Bit Range	Bits																All Resets
			31/15	30/14	29/13	28/12	27/11	26/10	25/9	24/8	23/7	22/6	21/5	20/4	19/3	18/2	17/1	16/0	
53B0	U1EP11	31:16	—	—	—	—	—	—	—	—	—	—	—	—	—	—	—	—	0000
		15:0	—	—	—	—	—	—	—	—	—	—	—	EPCONDIS	EPRXEN	EPTXEN	EPSTALL	EPHSHK	0000
53C0	U1EP12	31:16	—	—	—	—	—	—	—	—	—	—	—	—	—	—	—	—	0000
		15:0	—	—	—	—	—	—	—	—	—	—	—	EPCONDIS	EPRXEN	EPTXEN	EPSTALL	EPHSHK	0000
53D0	U1EP13	31:16	—	—	—	—	—	—	—	—	—	—	—	—	—	—	—	—	0000
		15:0	—	—	—	—	—	—	—	—	—	—	—	EPCONDIS	EPRXEN	EPTXEN	EPSTALL	EPHSHK	0000
53E0	U1EP14	31:16	—	—	—	—	—	—	—	—	—	—	—	—	—	—	—	—	0000
		15:0	—	—	—	—	—	—	—	—	—	—	—	EPCONDIS	EPRXEN	EPTXEN	EPSTALL	EPHSHK	0000
53F0	U1EP15	31:16	—	—	—	—	—	—	—	—	—	—	—	—	—	—	—	—	0000
		15:0	—	—	—	—	—	—	—	—	—	—	—	EPCONDIS	EPRXEN	EPTXEN	EPSTALL	EPHSHK	0000

Legend: x = unknown value on Reset; — = unimplemented, read as '0'. Reset values are shown in hexadecimal.

Note 1: All registers in this table (except as noted) have corresponding CLR, SET and INV registers at its virtual address, plus an offset of 0x4, 0x8 and 0xC respectively. See **Section 12.1.1 "CLR, SET and INV Registers"** for more information.

2: This register does not have associated SET and INV registers.

3: This register does not have associated CLR, SET and INV registers.

4: Reset value for this bit is undefined.

© 2009-2013 Microchip Technology Inc.

TABLE 4-45: CAN1 REGISTER SUMMARY FOR PIC32MX534F064H, PIC32MX564F064H, PIC32MX564F128H, PIC32MX575F256H, PIC32MX575F512H, PIC32MX764F128H, PIC32MX775F256H, PIC32MX775F512H, PIC32MX795F512H, PIC32MX534F064L, PIC32MX564F064L, PIC32MX564F128L, PIC32MX575F256L, PIC32MX575F512L, PIC32MX764F128L, PIC32MX775F256L, PIC32MX775F512L AND PIC32MX795F512L DEVICES

Virtual Address (BF88_#)	Register Name(1)	Bit Range	Bits																All Resets
			31/15	30/14	29/13	28/12	27/11	26/10	25/9	24/8	23/7	22/6	21/5	20/4	19/3	18/2	17/1	16/0	
B000	C1CON	31:16	—	—	—	—	ABAT	REQOP<2:0>			OPMOD<2:0>			CANCAP	—	—	—	—	0480
		15:0	ON	—	SIDLE	—	CANBUSY	—	—	—	—	—	—	DNCNT<4:0>					0000
B010	C1CFG	31:16	—	—	—	—	—	—	—	—	—	WAKFIL	—	—	—	SEG2PH<2:0>			0000
		15:0	SEG2PHTS	SAM	SEG1PH<2:0>			PRSEG<2:0>			SJW<1:0>		BRP<5:0>						0000
B020	C1INT	31:16	IVRIE	WAKIE	CERRIE	SERRIE	RBOVIE	—	—	—	—	—	—	—	MODIE	CTMRIE	RBIE	TBIE	0000
		15:0	IVRIF	WAKIF	CERRIF	SERRIF	RBOVIF	—	—	—	—	—	—	—	MODIF	CTMRIF	RBIF	TBIF	0000
B030	C1VEC	31:16	—	—	—	—	—	—	—	—	—	—	—	—	—	—	—	—	0000
		15:0	—	—	—	FILHIT<4:0>					—	ICODE<6:0>							0040
B040	C1TREC	31:16	—	—	—	—	—	—	—	—	—	—	TXBO	TXBP	RXBP	TXWARN	RXWARN	EWARN	0000
		15:0	TERRCNT<7:0>								RERRCNT<7:0>								0000
B050	C1FSTAT	31:16	FIFOIP31	FIFOIP30	FIFOIP29	FIFOIP28	FIFOIP27	FIFOIP26	FIFOIP25	FIFOIP24	FIFOIP23	FIFOIP22	FIFOIP21	FIFOIP20	FIFOIP19	FIFOIP18	FIFOIP17	FIFOIP16	0000
		15:0	FIFOIP15	FIFOIP14	FIFOIP13	FIFOIP12	FIFOIP11	FIFOIP10	FIFOIP9	FIFOIP8	FIFOIP7	FIFOIP6	FIFOIP5	FIFOIP4	FIFOIP3	FIFOIP2	FIFOIP1	FIFOIP0	0000
B060	C1RXOVF	31:16	RXOVF31	RXOVF30	RXOVF29	RXOVF28	RXOVF27	RXOVF26	RXOVF25	RXOVF24	RXOVF23	RXOVF22	RXOVF21	RXOVF20	RXOVF19	RXOVF18	RXOVF17	RXOVF16	0000
		15:0	RXOVF15	RXOVF14	RXOVF13	RXOVF12	RXOVF11	RXOVF10	RXOVF9	RXOVF8	RXOVF7	RXOVF6	RXOVF5	RXOVF4	RXOVF3	RXOVF2	RXOVF1	RXOVF0	0000
B070	C1TMR	31:16	CANTS<15:0>																0000
		15:0	CANTSPRE<15:0>																0000
B080	C1RXM0	31:16	SID<10:0>											——	MIDE	—	EID<17:16>		xxxx
		15:0	EID<15:0>																xxxx
B090	C1RXM1	31:16	SID<10:0>											——	MIDE	—	EID<17:16>		xxxx
		15:0	EID<15:0>																xxxx
B0A0	C1RXM2	31:16	SID<10:0>											——	MIDE	—	EID<17:16>		xxxx
		15:0	EID<15:0>																xxxx
B0B0	C1RXM3	31:16	SID<10:0>											——	MIDE	—	EID<17:16>		xxxx
		15:0	EID<15:0>																xxxx
B0C0	C1FLTCON0	31:16	FLTEN3	MSEL3<1:0>		FSEL3<4:0>					FLTEN2	MSEL2<1:0>		FSEL2<4:0>					0000
		15:0	FLTEN1	MSEL1<1:0>		FSEL1<4:0>					FLTEN0	MSEL0<1:0>		FSEL0<4:0>					0000
B0D0	C1FLTCON1	31:16	FLTEN7	MSEL7<1:0>		FSEL7<4:0>					FLTEN6	MSEL6<1:0>		FSEL6<4:0>					0000
		15:0	FLTEN5	MSEL5<1:0>		FSEL5<4:0>					FLTEN4	MSEL4<1:0>		FSEL4<4:0>					0000
B0E0	C1FLTCON2	31:16	FLTEN11	MSEL11<1:0>		FSEL11<4:0>					FLTEN10	MSEL10<1:0>		FSEL10<4:0>					0000
		15:0	FLTEN9	MSEL9<1:0>		FSEL9<4:0>					FLTEN8	MSEL8<1:0>		FSEL8<4:0>					0000
B0F0	C1FLTCON3	31:16	FLTEN15	MSEL15<1:0>		FSEL15<4:0>					FLTEN14	MSEL14<1:0>		FSEL14<4:0>					0000
		15:0	FLTEN13	MSEL13<1:0>		FSEL13<4:0>					FLTEN12	MSEL12<1:0>		FSEL12<4:0>					0000

Legend: x = unknown value on Reset; — = unimplemented, read as '0'. Reset values are shown in hexadecimal.

Note 1: All registers in this table have corresponding CLR, SET and INV registers at their virtual addresses, plus offsets of 0x4, 0x8 and 0xC, respectively. See **Section 12.1.1 "CLR, SET and INV Registers"** for more information.

© 2009-2013 Microchip Technology Inc.

TABLE 4-45: CAN1 REGISTER SUMMARY FOR PIC32MX534F064H, PIC32MX564F064H, PIC32MX564F128H, PIC32MX575F256H, PIC32MX575F512H, PIC32MX764F128H, PIC32MX775F256H, PIC32MX775F512H, PIC32MX795F512H, PIC32MX534F064L, PIC32MX564F064L, PIC32MX564F128L, PIC32MX575F256L, PIC32MX575F512L, PIC32MX764F128L, PIC32MX775F256L, PIC32MX775F512L AND PIC32MX795F512L DEVICES (CONTINUED)

Virtual Address (BF88_#)	Register Name(1)	Bit Range	Bits																All Resets
			31/15	30/14	29/13	28/12	27/11	26/10	25/9	24/8	23/7	22/6	21/5	20/4	19/3	18/2	17/1	16/0	
B100	C1FLTCON4	31:16	FLTEN19	MSEL19<1:0>		FSEL19<4:0>					FLTEN18	MSEL18<1:0>		FSEL18<4:0>					0000
		15:0	FLTEN17	MSEL17<1:0>		FSEL17<4:0>					FLTEN16	MSEL16<1:0>		FSEL16<4:0>					0000
B110	C1FLTCON5	31:16	FLTEN23	MSEL23<1:0>		FSEL23<4:0>					FLTEN22	MSEL22<1:0>		FSEL22<4:0>					0000
		15:0	FLTEN21	MSEL21<1:0>		FSEL21<4:0>					FLTEN20	MSEL20<1:0>		FSEL20<4:0>					0000
B120	C1FLTCON6	31:16	FLTEN27	MSEL27<1:0>		FSEL27<4:0>					FLTEN26	MSEL26<1:0>		FSEL26<4:0>					0000
		15:0	FLTEN25	MSEL25<1:0>		FSEL25<4:0>					FLTEN24	MSEL24<1:0>		FSEL24<4:0>					0000
B130	C1FLTCON7	31:16	FLTEN31	MSEL31<1:0>		FSEL31<4:0>					FLTEN30	MSEL30<1:0>		FSEL30<4:0>					0000
		15:0	FLTEN29	MSEL29<1:0>		FSEL29<4:0>					FLTEN28	MSEL28<1:0>		FSEL28<4:0>					0000
B140	C1RXFn (n = 0-31)	31:16	SID<10:0>											—	EXID	—	EID<17:16>		xxxx
		15:0	EID<15:0>																xxxx
B340	C1FIFOBA	31:16	C1FIFOBA<31:0>																0000
		15:0																	0000
B350	C1FIFOCONn (n = 0-31)	31:16	—	—	—	—	—	—	—	—	—	—	—	FSIZE<4:0>					0000
		15:0	—	FRESET	UINC	DONLY	—	—	—	—	TXEN	TXABAT	TXLARB	TXERR	TXREQ	RTREN	TXPRI<1:0>		0000
B360	C1FIFOINTn (n = 0-31)	31:16	—	—	—	—	—	TXNFULLIE	TXHALFIE	TXEMPTYIE	—	—	—	—	RXOVFLIE	RXFULLIE	RXHALFIE	RXN EMPTYIE	0000
		15:0	—	—	—	—	—	TXNFULLIF	TXHALFIF	TXEMPTYIF	—	—	—	—	RXOVFLIF	RXFULLIF	RXHALFIF	RXN EMPTYIF	0000
B370	C1FIFOUAn (n = 0-31)	31:16	C1FIFOUA<31:0>																0000
		15:0																	0000
B380	C1FIFOCIn (n = 0-31)	31:16	—	—	—	—	—	—	—	—	—	—	—	—	—	—	—	—	0000
		15:0	—	—	—	—	—	—	—	—	—	—	—	C1FIFOCI<4:0>					0000

Legend: x = unknown value on Reset; — = unimplemented, read as '0'. Reset values are shown in hexadecimal.

Note 1: All registers in this table have corresponding CLR, SET and INV registers at their virtual addresses, plus offsets of 0x4, 0x8 and 0xC, respectively. See **Section 12.1.1 "CLR, SET and INV Registers"** for more information.

© 2009-2013 Microchip Technology Inc.

TABLE 4-46: CAN2 REGISTER SUMMARY FOR PIC32MX775F256H, PIC32MX775F512H, PIC32MX795F512H, PIC32MX775F256L, PIC32MX775F512L AND PIC32MX795F512L DEVICES

Virtual Address (BF88_#)	Register Name(1)	Bit Range	Bits 31/15	30/14	29/13	28/12	27/11	26/10	25/9	24/8	23/7	22/6	21/5	20/4	19/3	18/2	17/1	16/0	All Resets
C000	C2CON	31:16	—	—	—	—	ABAT	REQOP<2:0>			OPMOD<2:0>			CANCAP	—	—	—	—	0480
		15:0	ON	—	SIDLE	—	CANBUSY	—	—	—	—	—	—	DNCNT<4:0>					0000
C010	C2CFG	31:16	—	—	—	—	—	—	—	—	—	WAKFIL	—	—	—	SEG2PH<2:0>			0000
		15:0	SEG2PHTS	SAM	SEG1PH<2:0>			PRSEG<2:0>			SJW<1:0>		BRP<5:0>						0000
C020	C2INT	31:16	IVRIE	WAKIE	CERRIE	SERRIE	RBOVIE	—	—	—	—	—	—	—	MODIE	CTMRIE	RBIE	TBIE	0000
		15:0	IVRIF	WAKIF	CERRIF	SERRIF	RBOVIF	—	—	—	—	—	—	—	MODIF	CTMRIF	RBIF	TBIF	0000
C030	C2VEC	31:16	—	—	—	—	—	—	—	—	—	—	—	—	—	—	—	—	0000
		15:0	—	—	—	FILHIT<4:0>					—	ICODE<6:0>							0040
C040	C2TREC	31:16	—	—	—	—	—	—	—	—	—	—	TXBO	TXBP	RXBP	TXWARN	RXWARN	EWARN	0000
		15:0	TERRCNT<7:0>								RERRCNT<7:0>								0000
C050	C2FSTAT	31:16	FIFOIP31	FIFOIP30	FIFOIP29	FIFOIP28	FIFOIP27	FIFOIP26	FIFOIP25	FIFOIP24	FIFOIP23	FIFOIP22	FIFOIP21	FIFOIP20	FIFOIP19	FIFOIP18	FIFOIP17	FIFOIP16	0000
		15:0	FIFOIP15	FIFOIP14	FIFOIP13	FIFOIP12	FIFOIP11	FIFOIP10	FIFOIP9	FIFOIP8	FIFOIP7	FIFOIP6	FIFOIP5	FIFOIP4	FIFOIP3	FIFOIP2	FIFOIP1	FIFOIP0	0000
C060	C2RXOVF	31:16	RXOVF31	RXOVF30	RXOVF29	RXOVF28	RXOVF27	RXOVF26	RXOVF25	RXOVF24	RXOVF23	RXOVF22	RXOVF21	RXOVF20	RXOVF19	RXOVF18	RXOVF17	RXOVF16	0000
		15:0	RXOVF15	RXOVF14	RXOVF13	RXOVF12	RXOVF11	RXOVF10	RXOVF9	RXOVF8	RXOVF7	RXOVF6	RXOVF5	RXOVF4	RXOVF3	RXOVF2	RXOVF1	RXOVF0	0000
C070	C2TMR	31:16	CANTS<15:0>																0000
		15:0	CANTSPRE<15:0>																0000
C080	C2RXM0	31:16	SID<10:0>											——	MIDE	—	EID<17:16>		xxxx
		15:0	EID<15:0>																xxxx
C0A0	C2RXM1	31:16	SID<10:0>											——	MIDE	—	EID<17:16>		xxxx
		15:0	EID<15:0>																xxxx
C0B0	C2RXM2	31:16	SID<10:0>											——	MIDE	—	EID<17:16>		xxxx
		15:0	EID<15:0>																xxxx
C0B0	C2RXM3	31:16	SID<10:0>											——	MIDE	—	EID<17:16>		xxxx
		15:0	EID<15:0>																xxxx
C0C0	C2FLTCON0	31:16	FLTEN3	MSEL3<1:0>		FSEL3<4:0>					FLTEN2	MSEL2<1:0>		FSEL2<4:0>					0000
		15:0	FLTEN1	MSEL1<1:0>		FSEL1<4:0>					FLTEN0	MSEL0<1:0>		FSEL0<4:0>					0000
C0D0	C2FLTCON1	31:16	FLTEN7	MSEL7<1:0>		FSEL7<4:0>					FLTEN6	MSEL6<1:0>		FSEL6<4:0>					0000
		15:0	FLTEN5	MSEL5<1:0>		FSEL5<4:0>					FLTEN4	MSEL4<1:0>		FSEL4<4:0>					0000
C0E0	C2FLTCON2	31:16	FLTEN11	MSEL11<1:0>		FSEL11<4:0>					FLTEN10	MSEL10<1:0>		FSEL10<4:0>					0000
		15:0	FLTEN9	MSEL9<1:0>		FSEL9<4:0>					FLTEN8	MSEL8<1:0>		FSEL8<4:0>					0000
C0F0	C2FLTCON3	31:16	FLTEN15	MSEL15<1:0>		FSEL15<4:0>					FLTEN14	MSEL14<1:0>		FSEL14<4:0>					0000
		15:0	FLTEN13	MSEL13<1:0>		FSEL13<4:0>					FLTEN12	MSEL12<1:0>		FSEL12<4:0>					0000

Legend: x = unknown value on Reset; — = unimplemented, read as '0'. Reset values are shown in hexadecimal.

Note 1: All registers in this table have corresponding CLR, SET and INV registers at their virtual addresses, plus offsets of 0x4, 0x8 and 0xC, respectively. See **Section 12.1.1 "CLR, SET and INV Registers"** for more information.

© 2009-2013 Microchip Technology Inc.

TABLE 4-46: CAN2 REGISTER SUMMARY FOR PIC32MX775F256H, PIC32MX775F512H, PIC32MX795F512H, PIC32MX775F256L, PIC32MX775F512L AND PIC32MX795F512L DEVICES (CONTINUED)

Virtual Address (BF88_#)	Register Name(1)	Bit Range	Bits																All Resets
			31/15	30/14	29/13	28/12	27/11	26/10	25/9	24/8	23/7	22/6	21/5	20/4	19/3	18/2	17/1	16/0	
C100	C2FLTCON4	31:16	FLTEN19	MSEL19<1:0>		FSEL19<4:0>					FLTEN18	MSEL18<1:0>		FSEL18<4:0>					0000
		15:0	FLTEN17	MSEL17<1:0>		FSEL17<4:0>					FLTEN16	MSEL16<1:0>		FSEL16<4:0:					0000
C110	C2FLTCON5	31:16	FLTEN23	MSEL23<1:0>		FSEL23<4:0>					FLTEN22	MSEL22<1:0>		FSEL22<4:0>					0000
		15:0	FLTEN21	MSEL21<1:0>		FSEL21<4:0>					FLTEN20	MSEL20<1:0>		FSEL20<4:0>					0000
C120	C2FLTCON6	31:16	FLTEN27	MSEL27<1:0>		FSEL27<4:0>					FLTEN26	MSEL26<1:0>		FSEL26<4:0>					0000
		15:0	FLTEN25	MSEL25<1:0>		FSEL25<4:0>					FLTEN24	MSEL24<1:0>		FSEL24<4:0>					0000
C130	C2FLTCON7	31:16	FLTEN31	MSEL31<1:0>		FSEL31<4:0>					FLTEN30	MSEL30<1:0>		FSEL30<4:0>					0000
		15:0	FLTEN29	MSEL29<1:0>		FSEL29<4:0>					FLTEN28	MSEL28<1:0>		FSEL28<4:0>					0000
C140	C2RXFn (n = 0-31)	31:16	SID<10:0>											—	EXID	—	EID<17:16>		xxxx
		15:0	EID<15:0>																xxxx
C340	C2FIFOBA	31:16	C2FIFOBA<31:0>																0000
		15:0																	0000
C350	C2FIFOCONn (n = 0-31)	31:16	—	—	—	—	—	—	—	—	—	—	—	FSIZE<4:0>					0000
		15:0	—	FRESET	UINC	DONLY	—	—	—	—	TXEN	TXABAT	TXLARB	TXERR	TXREQ	RTREN	TXPRI<1:0>		0000
C360	C2FIFOINTn (n = 0-31)	31:16	—	—	—	—	—	TXNFULLIE	TXHALFIE	TXEMPTYIE	—	—	—	—	RXOVFLIE	RXFULLIE	RXHALFIE	RXN EMPTYIE	0000
		15:0	—	—	—	—	—	TXNFULLIF	TXHALFIF	TXEMPTYIF	—	—	—	—	RXOVFLIF	RXFULLIF	RXHALFIF	RXN EMPTYIF	0000
C370	C2FIFOUAn (n = 0-31)	31:16	C2FIFOUA<31:0>																0000
		15:0																	0000
C380	C2FIFOCIn (n = 0-31)	31:16	—	—	—	—	—	—	—	—	—	—	—	—	—	—	—	—	0000
		15:0	—	—	—	—	—	—	—	—	—	—	—	C2FIFOCI<4:0>					0000

Legend: x = unknown value on Reset; — = unimplemented, read as '0'. Reset values are shown in hexadecimal.

Note 1: All registers in this table have corresponding CLR, SET and INV registers at their virtual addresses, plus offsets of 0x4, 0x8 and 0xC, respectively. See **Section 12.1.1 "CLR, SET and INV Registers"** for more information.

© 2009-2013 Microchip Technology Inc.

TABLE 4-47: ETHERNET CONTROLLER REGISTER SUMMARY FOR PIC32MX664F064H, PIC32MX664F128H, PIC32MX664F064L, PIC32MX664F128L, PIC32MX675F256H, PIC32MX675F512H, PIC32MX695F512H, PIC32MX775F256H, PIC32MX775F512H, PIC32MX795F512H, PIC32MX695F512L, PIC32MX675F256L, PIC32MX675F512L, PIC32MX764F128H, PIC32MX764F128L, PIC32MX775F256L, PIC32MX775F512L AND PIC32MX795F512L DEVICES

Virtual Address (BF88_#)	Register Name(1)	Bit Range	Bits																All Resets
			31/15	30/14	29/13	28/12	27/11	26/10	25/9	24/8	23/7	22/6	21/5	20/4	19/3	18/2	17/1	16/0	
9000	ETHCON1	31:16	PTV<15:0>																0000
		15:0	ON	—	SIDL	—	—	—	TXRTS	RXEN	AUTOFC	—	—	MANFC	—	—	—	BUFCDEC	0000
9010	ETHCON2	31:16	—	—	—	—	—	—	—	—	—	—	—	—	—	—	—	—	0000
		15:0	—	—	—	—	—	RXBUFSZ<6:0>							—	—	—	—	0000
9020	ETHTXST	31:16	TXSTADDR<31:16>																0000
		15:0	TXSTADDR<15:2>														—	—	0000
9030	ETHRXST	31:16	RXSTADDR<31:16>																0000
		15:0	RXSTADDR<15:2>														—	—	0000
9040	ETHHT0	31:16	HT<31:0>																0000
		15:0																	0000
9050	ETHHT1	31:16	HT<63:32>																0000
		15:0																	0000
9060	ETHPMM0	31:16	PMM<31:0>																0000
		15:0																	0000
9070	ETHPMM1	31:16	PMM<63:32>																0000
		15:0																	0000
9080	ETHPMCS	31:16	—	—	—	—	—	—	—	—	—	—	—	—	—	—	—	—	0000
		15:0	PMCS<15:0>																0000
9090	ETHPMO	31:16	—	—	—	—	—	—	—	—	—	—	—	—	—	—	—	—	0000
		15:0	PMO<15:0>																0000
90A0	ETHRXFC	31:16	—	—	—	—	—	—	—	—	—	—	—	—	—	—	—	—	0000
		15:0	HTEN	MPEN	—	NOTPM	PMMODE<3:0>				CRC ERREN	CRC OKEN	RUNT ERREN	RUNTEN	UCEN	NOT MEEN	MCEN	BCEN	0000
90B0	ETHRXWM	31:16	—	—	—	—	—	—	—	—	RXFWM<7:0>								0000
		15:0	—	—	—	—	—	—	—	—	RXEWM<7:0>								0000
90C0	ETHIEN	31:16	—	—	—	—	—	—	—	—	—	—	—	—	—	—	—	—	0000
		15:0	—	TX BUSEIE	RX BUSEIE	—	—	—	EW MARKIE	FW MARKIE	RX DONEIE	PK TPENDIE	RX ACTIE	—	TX DONEIE	TX ABORTIE	RX BUFNAIE	RX OVFLWIE	0000
90D0	ETHIRQ	31:16	—	—	—	—	—	—	—	—	—	—	—	—	—	—	—	—	0000
		15:0	—	TXBUSE	RXBUSE	—	—	—	EWMARK	FWMARK	RXDONE	PKTPEND	RXACT	—	TXDONE	TXABORT	RXBUFNA	RXOVFLW	0000

Legend: x = unknown value on Reset; — = unimplemented, read as '0'. Reset values are shown in hexadecimal.

Note 1: All registers in this table (with the exception of ETHSTAT) have corresponding CLR, SET and INV registers at their virtual addresses, plus offsets of 0x4, 0x8 and 0xC, respectively. See **Section 12.1.1 "CLR, SET and INV Registers"** for more information.

2: Reset values default to the factory programmed value.

© 2009-2013 Microchip Technology Inc.

TABLE 4-47: ETHERNET CONTROLLER REGISTER SUMMARY FOR PIC32MX664F064H, PIC32MX664F128H, PIC32MX664F064L, PIC32MX664F128L, PIC32MX675F256H, PIC32MX675F512H, PIC32MX695F512H, PIC32MX775F256H, PIC32MX775F512H, PIC32MX795F512H, PIC32MX695F512L, PIC32MX675F256L, PIC32MX675F512L, PIC32MX764F128H, PIC32MX764F128L, PIC32MX775F256L, PIC32MX775F512L AND PIC32MX795F512L DEVICES (CONTINUED)

Virtual Address (BF88_#)	Register Name(1)	Bit Range	Bits																All Resets
			31/15	30/14	29/13	28/12	27/11	26/10	25/9	24/8	23/7	22/6	21/5	20/4	19/3	18/2	17/1	16/0	
90E0	ETHSTAT	31:16	—	—	—	—	—	—	—	—	BUFCNT<7:0>								0000
		15:0	—	—	—	—	—	—	—	—	BUSY	TXBUSY	RXBUSY	—	—	—	—	—	0000
9100	ETH RXOVFLOW	31:16	—	—	—	—	—	—	—	—	—	—	—	—	—	—	—	—	0000
		15:0	RXOVFLWCNT<15:0>																0000
9110	ETH FRMTXOK	31:16	—	—	—	—	—	—	—	—	—	—	—	—	—	—	—	—	0000
		15:0	FRMTXOKCNT<15:0>																0000
9120	ETH SCOLFRM	31:16	—	—	—	—	—	—	—	—	—	—	—	—	—	—	—	—	0000
		15:0	SCOLFRMCNT<15:0>																0000
9130	ETH MCOLFRM	31:16	—	—	—	—	—	—	—	—	—	—	—	—	—	—	—	—	0000
		15:0	MCOLFRMCNT<15:0>																0000
9140	ETH FRMRXOK	31:16	—	—	—	—	—	—	—	—	—	—	—	—	—	—	—	—	0000
		15:0	FRMRXOKCNT<15:0>																0000
9150	ETH FCSERR	31:16	—	—	—	—	—	—	—	—	—	—	—	—	—	—	—	—	0000
		15:0	FCSERRCNT<15:0>																0000
9160	ETH ALGNERR	31:16	—	—	—	—	—	—	—	—	—	—	—	—	—	—	—	—	0000
		15:0	ALGNERRCNT<15:0>																0000
9200	EMAC1 CFG1	31:16	—	—	—	—	—	—	—	—	—	—	—	—	—	—	—	—	0000
		15:0	SOFT RESET	SIM RESET	—	—	RESET RMCS	RESET RFUN	RESET TMCS	RESET TFUN	—	—	—	LOOPBACK	TXPAUSE	RXPAUSE	PASSALL	RXENABLE	800D
9210	EMAC1 CFG2	31:16	—	—	—	—	—	—	—	—	—	—	—	—	—	—	—	—	0000
		15:0	—	EXCESS DFR	BP NOBKOFF	NOBKOFF	—	—	LONGPRE	PUREPRE	AUTOPAD	VLANPAD	PAD ENABLE	CRC ENABLE	DELAYCRC	HUGEFRM	LENGTHCK	FULLDPLX	4082
9220	EMAC1 IPGT	31:16	—	—	—	—	—	—	—	—	—	—	—	—	—	—	—	—	0000
		15:0	—	—	—	—	—	—	—	—	—	B2BIPKTGP<6:0>							0012
9230	EMAC1 IPGR	31:16	—	—	—	—	—	—	—	—	—	—	—	—	—	—	—	—	0000
		15:0	—	NB2BIPKTGP1<6:0>							—	NB2BIPKTGP2<6:0>							0C12
9240	EMAC1 CLRT	31:16	—	—	—	—	—	—	—	—	—	—	—	—	—	—	—	—	0000
		15:0	—	—	CWINDOW<5:0>						—	—	—	—	RETX<3:0>				370F
9250	EMAC1 MAXF	31:16	—	—	—	—	—	—	—	—	—	—	—	—	—	—	—	—	0000
		15:0	MACMAXF<15:0>																05EE

Legend: x = unknown value on Reset; — = unimplemented, read as '0'. Reset values are shown in hexadecimal.

Note 1: All registers in this table (with the exception of ETHSTAT) have corresponding CLR, SET and INV registers at their virtual addresses, plus offsets of 0x4, 0x8 and 0xC, respectively. See **Section 12.1.1 "CLR, SET and INV Registers"** for more information.

2: Reset values default to the factory programmed value.

© 2009-2013 Microchip Technology Inc.

TABLE 4-47: ETHERNET CONTROLLER REGISTER SUMMARY FOR PIC32MX664F064H, PIC32MX664F128H, PIC32MX664F064L, PIC32MX664F128L, PIC32MX675F256H, PIC32MX675F512H, PIC32MX695F512H, PIC32MX775F256H, PIC32MX775F512H, PIC32MX795F512H, PIC32MX695F512L, PIC32MX675F256L, PIC32MX675F512L, PIC32MX764F128H, PIC32MX764F128L, PIC32MX775F256L, PIC32MX775F512L AND PIC32MX795F512L DEVICES (CONTINUED)

Virtual Address (BF88_#)	Register Name(1)	Bit Range	Bits																All Resets
			31/15	30/14	29/13	28/12	27/11	26/10	25/9	24/8	23/7	22/6	21/5	20/4	19/3	18/2	17/1	16/0	
9260	EMAC1 SUPP	31:16	—	—	—	—	—	—	—	—	—	—	—	—	—	—	—	—	0000
		15:0	—	—	—	—	RESET RMII	—	—	SPEED RMII	—	—	—	—	—	—	—	—	1000
9270	EMAC1 TEST	31:16	—	—	—	—	—	—	—	—	—	—	—	—	—	—	—	—	0000
		15:0	—	—	—	—	—	—	—	—	—	—	—	—	—	TESTBP	TESTPAUSE	SHRTQNTA	0000
9280	EMAC1 MCFG	31:16	—	—	—	—	—	—	—	—	—	—	—	—	—	—	—	—	0000
		15:0	RESET MGMT	—	—	—	—	—	—	—	—	—	CLKSEL<3:0>				NOPRE	SCANINC	0020
9290	EMAC1 MCMD	31:16	—	—	—	—	—	—	—	—	—	—	—	—	—	—	—	—	0000
		15:0	—	—	—	—	—	—	—	—	—	—	—	—	—	—	SCAN	READ	0000
92A0	EMAC1 MADR	31:16	—	—	—	—	—	—	—	—	—	—	—	—	—	—	—	—	0000
		15:0	—	—	—	PHYADDR<4:0>					—	—	—	REGADDR<4:0>					0100
92B0	EMAC1 MWTD	31:16	—	—	—	—	—	—	—	—	—	—	—	—	—	—	—	—	0000
		15:0	MWTD<15:0>																0000
92C0	EMAC1 MRDD	31:16	—	—	—	—	—	—	—	—	—	—	—	—	—	—	—	—	0000
		15:0	MRDD<15:0>																0000
92D0	EMAC1 MIND	31:16	—	—	—	—	—	—	—	—	—	—	—	—	—	—	—	—	0000
		15:0	—	—	—	—	—	—	—	—	—	—	—	—	LINKFAIL	NOTVALID	SCAN	MIIMBUSY	0000
9300	EMAC1 SA0(2)	31:16	—	—	—	—	—	—	—	—	—	—	—	—	—	—	—	—	xxxx
		15:0	STNADDR6<7:0>								STNADDR5<7:0>								xxxx
9310	EMAC1 SA1(2)	31:16	—	—	—	—	—	—	—	—	—	—	—	—	—	—	—	—	xxxx
		15:0	STNADDR4<7:0>								STNADDR3<7:0>								xxxx
9320	EMAC1 SA2(2)	31:16	—	—	—	—	—	—	—	—	—	—	—	—	—	—	—	—	xxxx
		15:0	STNADDR2<7:0>								STNADDR1<7:0>								xxxx

Legend: x = unknown value on Reset; — = unimplemented, read as '0'. Reset values are shown in hexadecimal.

Note 1: All registers in this table (with the exception of ETHSTAT) have corresponding CLR, SET and INV registers at their virtual addresses, plus offsets of 0x4, 0x8 and 0xC, respectively. See **Section 12.1.1 "CLR, SET and INV Registers"** for more information.

2: Reset values default to the factory programmed value.

© 2009-2013 Microchip Technology Inc.

4.2 Control Registers

Register 4-1 through Register 4-8 are used for setting the RAM and Flash memory partitions for data and code.

REGISTER 4-1: BMXCON: BUS MATRIX CONFIGURATION REGISTER

Bit Range	Bit 31/23/15/7	Bit 30/22/14/6	Bit 29/21/13/5	Bit 28/20/12/4	Bit 27/19/11/3	Bit 26/18/10/2	Bit 25/17/9/1	Bit 24/16/8/0
31:24	U-0	U-0	U-0	U-0	U-0	U-0	U-0	U-0
	—	—	—	—	—	—	—	—
23:16	U-0	U-0	U-0	R/W-1	R/W-1	R/W-1	R/W-1	R/W-1
	—	—	—	BMX ERRIXI	BMX ERRICD	BMX ERRDMA	BMX ERRDS	BMX ERRIS
15:8	U-0	U-0	U-0	U-0	U-0	U-0	U-0	U-0
	—	—	—	—	—	—	—	—
7:0	U-0	R/W-1	U-0	U-0	U-0	R/W-0	R/W-0	R/W-1
	—	BMX WSDRM	—	—	—	BMXARB<2:0>		

Legend:		
R = Readable bit	W = Writable bit	U = Unimplemented bit, read as ‘0’
-n = Value at POR	‘1’ = Bit is set	‘0’ = Bit is cleared

bit 31-21 **Unimplemented:** Read as ‘0’

bit 20 **BMXERRIXI:** Enable Bus Error from IXI bit
1 = Enable bus error exceptions for unmapped address accesses initiated from IXI shared bus
0 = Disable bus error exceptions for unmapped address accesses initiated from IXI shared bus

bit 19 **BMXERRICD:** Enable Bus Error from ICD Debug Unit bit
1 = Enable bus error exceptions for unmapped address accesses initiated from ICD
0 = Disable bus error exceptions for unmapped address accesses initiated from ICD

bit 18 **BMXERRDMA:** Bus Error from DMA bit
1 = Enable bus error exceptions for unmapped address accesses initiated from DMA
0 = Disable bus error exceptions for unmapped address accesses initiated from DMA

bit 17 **BMXERRDS:** Bus Error from CPU Data Access bit (disabled in Debug mode)
1 = Enable bus error exceptions for unmapped address accesses initiated from CPU data access
0 = Disable bus error exceptions for unmapped address accesses initiated from CPU data access

bit 16 **BMXERRIS:** Bus Error from CPU Instruction Access bit (disabled in Debug mode)
1 = Enable bus error exceptions for unmapped address accesses initiated from CPU instruction access
0 = Disable bus error exceptions for unmapped address accesses initiated from CPU instruction access

bit 15-7 **Unimplemented:** Read as ‘0’

bit 6 **BMXWSDRM:** CPU Instruction or Data Access from Data RAM Wait State bit
1 = Data RAM accesses from CPU have one wait state for address setup
0 = Data RAM accesses from CPU have zero wait states for address setup

bit 5-3 **Unimplemented:** Read as ‘0’

bit 2-0 **BMXARB<2:0>:** Bus Matrix Arbitration Mode bits
111 = Reserved (using these Configuration modes will produce undefined behavior)
•
•
•
011 = Reserved (using these Configuration modes will produce undefined behavior)
010 = Arbitration Mode 2
001 = Arbitration Mode 1 (default)
000 = Arbitration Mode 0

REGISTER 4-2: BMXDKPBA: DATA RAM KERNEL PROGRAM BASE ADDRESS REGISTER

Bit Range	Bit 31/23/15/7	Bit 30/22/14/6	Bit 29/21/13/5	Bit 28/20/12/4	Bit 27/19/11/3	Bit 26/18/10/2	Bit 25/17/9/1	Bit 24/16/8/0
31:24	U-0	U-0	U-0	U-0	U-0	U-0	U-0	U-0
	—	—	—	—	—	—	—	—
23:16	U-0	U-0	U-0	U-0	U-0	U-0	U-0	U-0
	—	—	—	—	—	—	—	—
15:8	R/W-0	R/W-0	R/W-0	R/W-0	R/W-0	R/W-0	R-0	R-0
	BMXDKPBA<15:8>							
7:0	R-0	R-0	R-0	R-0	R-0	R-0	R-0	R-0
	BMXDKPBA<7:0>							

Legend:			
R = Readable bit	W = Writable bit	U = Unimplemented bit, read as ‘0’	
-n = Value at POR	‘1’ = Bit is set	‘0’ = Bit is cleared	x = Bit is unknown

bit 31-16 **Unimplemented:** Read as ‘0’

bit 15-10 **BMXDKPBA<15:10>:** DRM Kernel Program Base Address bits
When non-zero, this value selects the relative base address for kernel program space in RAM

bit 9-0 **BMXDKPBA<9:0>:** DRM Kernel Program Base Address Read-Only bits
Value is always ‘0’, which forces 1 KB increments

Note 1: At Reset, the value in this register is forced to zero, which causes all of the RAM to be allocated to Kernal mode data usage.

2: The value in this register must be less than or equal to BMXDRMSZ.

© 2009-2013 Microchip Technology Inc.

REGISTER 4-3: BMXDUDBA: DATA RAM USER DATA BASE ADDRESS REGISTER

Bit Range	Bit 31/23/15/7	Bit 30/22/14/6	Bit 29/21/13/5	Bit 28/20/12/4	Bit 27/19/11/3	Bit 26/18/10/2	Bit 25/17/9/1	Bit 24/16/8/0
31:24	U-0	U-0	U-0	U-0	U-0	U-0	U-0	U-0
	—	—	—	—	—	—	—	—
23:16	U-0	U-0	U-0	U-0	U-0	U-0	U-0	U-0
	—	—	—	—	—	—	—	—
15:8	R/W-0	R/W-0	R/W-0	R/W-0	R/W-0	R/W-0	R-0	R-0
	BMXDUDBA<15:8>							
7:0	R-0	R-0	R-0	R-0	R-0	R-0	R-0	R-0
	BMXDUDBA<7:0>							

Legend:			
R = Readable bit	W = Writable bit	U = Unimplemented bit, read as ‘0’	
-n = Value at POR	‘1’ = Bit is set	‘0’ = Bit is cleared	x = Bit is unknown

bit 31-16 **Unimplemented:** Read as ‘0’

bit 15-10 **BMXDUDBA<15:10>:** DRM User Data Base Address bits

When non-zero, the value selects the relative base address for User mode data space in RAM, the value must be greater than BMXDKPBA.

bit 9-0 **BMXDUDBA<9:0>:** DRM User Data Base Address Read-Only bits

Value is always ‘0’, which forces 1 KB increments

Note 1: At Reset, the value in this register is forced to zero, which causes all of the RAM to be allocated to Kernal mode data usage.

2: The value in this register must be less than or equal to BMXDRMSZ.

REGISTER 4-4: BMXDUPBA: DATA RAM USER PROGRAM BASE ADDRESS REGISTER

Bit Range	Bit 31/23/15/7	Bit 30/22/14/6	Bit 29/21/13/5	Bit 28/20/12/4	Bit 27/19/11/3	Bit 26/18/10/2	Bit 25/17/9/1	Bit 24/16/8/0
31:24	U-0	U-0	U-0	U-0	U-0	U-0	U-0	U-0
	—	—	—	—	—	—	—	—
23:16	U-0	U-0	U-0	U-0	U-0	U-0	U-0	U-0
	—	—	—	—	—	—	—	—
15:8	R/W-0	R/W-0	R/W-0	R/W-0	R/W-0	R/W-0	R-0	R-0
	BMXDUPBA<15:8>							
7:0	R-0	R-0	R-0	R-0	R-0	R-0	R-0	R-0
	BMXDUPBA<7:0>							

Legend:			
R = Readable bit	W = Writable bit	U = Unimplemented bit, read as ‘0’	
-n = Value at POR	‘1’ = Bit is set	‘0’ = Bit is cleared	x = Bit is unknown

bit 31-16 **Unimplemented:** Read as ‘0’

bit 15-10 **BMXDUPBA<15:10>:** DRM User Program Base Address bits

When non-zero, the value selects the relative base address for User mode program space in RAM, BMXDUPBA must be greater than BMXDUDBA.

bit 9-0 **BMXDUPBA<9:0>:** DRM User Program Base Address Read-Only bits

Value is always ‘0’, which forces 1 KB increments

Note 1: At Reset, the value in this register is forced to zero, which causes all of the RAM to be allocated to Kernal mode data usage.

2: The value in this register must be less than or equal to BMXDRMSZ.

© 2009-2013 Microchip Technology Inc.

REGISTER 4-5: BMXDRMSZ: DATA RAM SIZE REGISTER

Bit Range	Bit 31/23/15/7	Bit 30/22/14/6	Bit 29/21/13/5	Bit 28/20/12/4	Bit 27/19/11/3	Bit 26/18/10/2	Bit 25/17/9/1	Bit 24/16/8/0
31:24	R	R	R	R	R	R	R	R
	BMXDRMSZ<31:24>							
23:16	R	R	R	R	R	R	R	R
	BMXDRMSZ<23:16>							
15:8	R	R	R	R	R	R	R	R
	BMXDRMSZ<15:8>							
7:0	R	R	R	R	R	R	R	R
	BMXDRMSZ<7:0>							

Legend:			
R = Readable bit	W = Writable bit	U = Unimplemented bit, read as ‘0’	
-n = Value at POR	‘1’ = Bit is set	‘0’ = Bit is cleared	x = Bit is unknown

bit 31-0 **BMXDRMSZ<31:0>:** Data RAM Memory (DRM) Size bits
Static value that indicates the size of the Data RAM in bytes:
0x00004000 = device has 16 KB RAM
0x00008000 = device has 32 KB RAM
0x00010000 = device has 64 KB RAM

REGISTER 4-6: BMXPUPBA: PROGRAM FLASH (PFM) USER PROGRAM BASE ADDRESS REGISTER(1,2)

Bit Range	Bit 31/23/15/7	Bit 30/22/14/6	Bit 29/21/13/5	Bit 28/20/12/4	Bit 27/19/11/3	Bit 26/18/10/2	Bit 25/17/9/1	Bit 24/16/8/0
31:24	U-0	U-0	U-0	U-0	U-0	U-0	U-0	U-0
	—	—	—	—	—	—	—	—
23:16	U-0	U-0	U-0	U-0	R/W-0	R/W-0	R/W-0	R/W-0
	—	—	—	—	BMXPUPBA<19:16>			
15:8	R/W-0	R/W-0	R/W-0	R/W-0	R/W-0	R-0	R-0	R-0
	BMXPUPBA<15:8>							
7:0	R-0	R-0	R-0	R-0	R-0	R-0	R-0	R-0
	BMXPUPBA<7:0>							

Legend:			
R = Readable bit	W = Writable bit	U = Unimplemented bit, read as ‘0’	
-n = Value at POR	‘1’ = Bit is set	‘0’ = Bit is cleared	x = Bit is unknown

bit 31-20 **Unimplemented:** Read as ‘0’
bit 19-11 **BMXPUPBA<19:11>:** Program Flash (PFM) User Program Base Address bits
bit 10-0 **BMXPUPBA<10:0>:** Program Flash (PFM) User Program Base Address Read-Only bits
Value is always ‘0’, which forces 2 KB increments

Note 1: At Reset, the value in this register is forced to zero, which causes all of the RAM to be allocated to Kernal mode data usage.
2: The value in this register must be less than or equal to BMXPFMSZ.

REGISTER 4-7: BMXPFMSZ: PROGRAM FLASH (PFM) SIZE REGISTER

Bit Range	Bit 31/23/15/7	Bit 30/22/14/6	Bit 29/21/13/5	Bit 28/20/12/4	Bit 27/19/11/3	Bit 26/18/10/2	Bit 25/17/9/1	Bit 24/16/8/0
31:24	R	R	R	R	R	R	R	R
	BMXPFMSZ<31:24>							
23:16	R	R	R	R	R	R	R	R
	BMXPFMSZ<23:16>							
15:8	R	R	R	R	R	R	R	R
	BMXPFMSZ<15:8>							
7:0	R	R	R	R	R	R	R	R
	BMXPFMSZ<7:0>							

Legend:			
R = Readable bit	W = Writable bit	U = Unimplemented bit, read as ‘0’	
-n = Value at POR	‘1’ = Bit is set	‘0’ = Bit is cleared	x = Bit is unknown

bit 31-0 **BMXPFMSZ<31:0>:** Program Flash Memory (PFM) Size bits
Static value that indicates the size of the PFM in bytes:
0x00010000 = device has 64 KB Flash
0x00020000 = device has 128 KB Flash
0x00040000 = device has 256 KB Flash
0x00080000 = device has 512 KB Flash

REGISTER 4-8: BMXBOOTSZ: BOOT FLASH (IFM) SIZE REGISTER

Bit Range	Bit 31/23/15/7	Bit 30/22/14/6	Bit 29/21/13/5	Bit 28/20/12/4	Bit 27/19/11/3	Bit 26/18/10/2	Bit 25/17/9/1	Bit 24/16/8/0
31:24	R	R	R	R	R	R	R	R
	BMXBOOTSZ<31:24>							
23:16	R	R	R	R	R	R	R	R
	BMXBOOTSZ<23:16>							
15:8	R	R	R	R	R	R	R	R
	BMXBOOTSZ<15:8>							
7:0	R	R	R	R	R	R	R	R
	BMXBOOTSZ<7:0>							

Legend:			
R = Readable bit	W = Writable bit	U = Unimplemented bit, read as ‘0’	
-n = Value at POR	‘1’ = Bit is set	‘0’ = Bit is cleared	x = Bit is unknown

bit 31-0 **BMXBOOTSZ<31:0>:** Boot Flash Memory (BFM) Size bits
Static value that indicates the size of the Boot PFM in bytes:
0x00003000 = device has 12 KB boot Flash

© 2009-2013 Microchip Technology Inc.

5.0 FLASH PROGRAM MEMORY

Note 1: This data sheet summarizes the features of the PIC32MX5XX/6XX/7XX family of devices. It is not intended to be a comprehensive reference source. To complement the information in this data sheet, refer to **Section 5. "Flash Program Memory"** (DS60001121) in the *"PIC32 Family Reference Manual"*, which is available from the Microchip web site (www.microchip.com/PIC32).

2: Some registers and associated bits described in this section may not be available on all devices. Refer to **Section 4.0 "Memory Organization"** in this data sheet for device-specific register and bit information.

PIC32MX5XX/6XX/7XX devices contain an internal Flash program memory for executing user code. There are three methods by which the user can program this memory:

- Run-Time Self-Programming (RTSP)
- EJTAG Programming
- In-Circuit Serial Programming™ (ICSP™)

RTSP is performed by software executing from either Flash or RAM memory. Information about RTSP techniques is available in **Section 5. "Flash Program Memory"** (DS60001121) in the *"PIC32 Family Reference Manual".*

EJTAG is performed using the EJTAG port of the device and an EJTAG capable programmer.

ICSP is performed using a serial data connection to the device and allows much faster programming times than RTSP.

The EJTAG and ICSP methods are described in the "*PIC32 Flash Programming Specification*" (DS60001145), which can be downloaded from the Microchip web site.

Note: For PIC32MX5XX/6XX/7XX devices, the Flash page size is 4 KB and the row size is 512 bytes (1024 IW and 128 IW, respectively).

5.1 Control Registers

REGISTER 5-1: NVMCON: PROGRAMMING CONTROL REGISTER

Bit Range	Bit 31/23/15/7	Bit 30/22/14/6	Bit 29/21/13/5	Bit 28/20/12/4	Bit 27/19/11/3	Bit 26/18/10/2	Bit 25/17/9/1	Bit 24/16/8/0
31:24	U-0	U-0	U-0	U-0	U-0	U-0	U-0	U-0
	—	—	—	—	—	—	—	—
23:16	U-0	U-0	U-0	U-0	U-0	U-0	U-0	U-0
	—	—	—	—	—	—	—	—
15:8	R/W-0, HC	R/W-0	R-0, HS	R-0, HS	R-0, HSC	U-0	U-0	U-0
	WR	WREN	WRERR(1)	LVDERR(1)	LVDSTAT(1)	—	—	—
7:0	U-0	U-0	U-0	U-0	R/W-0	R/W-0	R/W-0	R/W-0
	—	—	—	—	NVMOP<3:0>			

Legend:	U = Unimplemented bit, read as ‘0’		HSC = Set and Cleared by hardware
R = Readable bit	W = Writable bit	HS = Set by hardware	HC = Cleared by hardware
-n = Value at POR	‘1’ = Bit is set	‘0’ = Bit is cleared	x = Bit is unknown

bit 31-16 **Unimplemented:** Read as ‘0’

bit 15 **WR:** Write Control bit
This bit is writable when WREN = 1 and the unlock sequence is followed.
1 = Initiate a Flash operation. Hardware clears this bit when the operation completes
0 = Flash operation complete or inactive

bit 14 **WREN:** Write Enable bit
1 = Enable writes to WR bit and enables LVD circuit
0 = Disable writes to WR bit and disables LVD circuit

Note: This is the only bit in this register that is reset by a device Reset.

bit 13 **WRERR:** Write Error bit(1)
This bit is read-only and is automatically set by hardware.
1 = Program or erase sequence did not complete successfully
0 = Program or erase sequence completed normally

bit 12 **LVDERR:** Low-Voltage Detect Error bit (LVD circuit must be enabled)(1)
This bit is read-only and is automatically set by hardware.
1 = Low-voltage detected (possible data corruption, if WRERR is set)
0 = Voltage level is acceptable for programming

bit 11 **LVDSTAT:** Low-Voltage Detect Status bit (LVD circuit must be enabled)(1)
This bit is read-only and is automatically set, and cleared, by hardware.
1 = Low-voltage event is active
0 = Low-voltage event is not active

bit 10-4 **Unimplemented:** Read as ‘0’

bit 3-0 **NVMOP<3:0>:** NVM Operation bits
These bits are writable when WREN = 0.
1111 = Reserved
•
•
•
0111 = Reserved
0110 = No operation
0101 = Program Flash (PFM) erase operation: erases PFM, if all pages are not write-protected
0100 = Page erase operation: erases page selected by NVMADDR, if it is not write-protected
0011 = Row program operation: programs row selected by NVMADDR, if it is not write-protected
0010 = No operation
0001 = Word program operation: programs word selected by NVMADDR, if it is not write-protected
0000 = No operation

Note 1: This bit is cleared by setting NVMOP == 0000b, and initiating a Flash operation (i.e., WR).

© 2009-2013 Microchip Technology Inc.

REGISTER 5-2: NVMKEY: PROGRAMMING UNLOCK REGISTER

Bit Range	Bit 31/23/15/7	Bit 30/22/14/6	Bit 29/21/13/5	Bit 28/20/12/4	Bit 27/19/11/3	Bit 26/18/10/2	Bit 25/17/9/1	Bit 24/16/8/0
31:24	W-0	W-0	W-0	W-0	W-0	W-0	W-0	W-0
	NVMKEY<31:24>							
23:16	W-0	W-0	W-0	W-0	W-0	W-0	W-0	W-0
	NVMKEY<23:16>							
15:8	W-0	W-0	W-0	W-0	W-0	W-0	W-0	W-0
	NVMKEY<15:8>							
7:0	W-0	W-0	W-0	W-0	W-0	W-0	W-0	W-0
	NVMKEY<7:0>							

Legend:			
R = Readable bit	W = Writable bit	U = Unimplemented bit, read as ‘0’	
-n = Value at POR	‘1’ = Bit is set	‘0’ = Bit is cleared	x = Bit is unknown

bit 31-0 **NVMKEY<31:0>:** Unlock Register bits
These bits are write-only, and read as ‘0’ on any read.

Note: This register is used as part of the unlock sequence to prevent inadvertent writes to the PFM.

REGISTER 5-3: NVMADDR: FLASH ADDRESS REGISTER

Bit Range	Bit 31/23/15/7	Bit 30/22/14/6	Bit 29/21/13/5	Bit 28/20/12/4	Bit 27/19/11/3	Bit 26/18/10/2	Bit 25/17/9/1	Bit 24/16/8/0
31:24	R/W-0	R/W-0	R/W-0	R/W-0	R/W-0	R/W-0	R/W-0	R/W-0
	NVMADDR<31:24>							
23:16	R/W-0	R/W-0	R/W-0	R/W-0	R/W-0	R/W-0	R/W-0	R/W-0
	NVMADDR<23:16>							
15:8	R/W-0	R/W-0	R/W-0	R/W-0	R/W-0	R/W-0	R/W-0	R/W-0
	NVMADDR<15:8>							
7:0	R/W-0	R/W-0	R/W-0	R/W-0	R/W-0	R/W-0	R/W-0	R/W-0
	NVMADDR<7:0>							

Legend:			
R = Readable bit	W = Writable bit	U = Unimplemented bit, read as ‘0’	
-n = Value at POR	‘1’ = Bit is set	‘0’ = Bit is cleared	x = Bit is unknown

bit 31-0 **NVMADDR<31:0>:** Flash Address bits
Bulk/Chip/PFM Erase: Address is ignored.
Page Erase: Address identifies the page to erase.
Row Program: Address identifies the row to program.
Word Program: Address identifies the word to program.

REGISTER 5-4: NVMDATA: FLASH PROGRAM DATA REGISTER

Bit Range	Bit 31/23/15/7	Bit 30/22/14/6	Bit 29/21/13/5	Bit 28/20/12/4	Bit 27/19/11/3	Bit 26/18/10/2	Bit 25/17/9/1	Bit 24/16/8/0
31:24	R/W-0	R/W-0	R/W-0	R/W-0	R/W-0	R/W-0	R/W-0	R/W-0
	NVMDATA<31:24>							
23:16	R/W-0	R/W-0	R/W-0	R/W-0	R/W-0	R/W-0	R/W-0	R/W-0
	NVMDATA<23:16>							
15:8	R/W-0	R/W-0	R/W-0	R/W-0	R/W-0	R/W-0	R/W-0	R/W-0
	NVMDATA<15:8>							
7:0	R/W-0	R/W-0	R/W-0	R/W-0	R/W-0	R/W-0	R/W-0	R/W-0
	NVMDATA<7:0>							

Legend:			
R = Readable bit	W = Writable bit	U = Unimplemented bit, read as ‘0’	
-n = Value at POR	‘1’ = Bit is set	‘0’ = Bit is cleared	x = Bit is unknown

bit 31-0 **NVMDATA<31:0>:** Flash Programming Data bits

Note: The bits in this register are only reset by a Power-on Reset (POR).

REGISTER 5-5: NVMSRCADDR: SOURCE DATA ADDRESS REGISTER

Bit Range	Bit 31/23/15/7	Bit 30/22/14/6	Bit 29/21/13/5	Bit 28/20/12/4	Bit 27/19/11/3	Bit 26/18/10/2	Bit 25/17/9/1	Bit 24/16/8/0
31:24	R/W-0	R/W-0	R/W-0	R/W-0	R/W-0	R/W-0	R/W-0	R/W-0
	NVMSRCADDR<31:24>							
23:16	R/W-0	R/W-0	R/W-0	R/W-0	R/W-0	R/W-0	R/W-0	R/W-0
	NVMSRCADDR<23:16>							
15:8	R/W-0	R/W-0	R/W-0	R/W-0	R/W-0	R/W-0	R/W-0	R/W-0
	NVMSRCADDR<15:8>							
7:0	R/W-0	R/W-0	R/W-0	R/W-0	R/W-0	R/W-0	R/W-0	R/W-0
	NVMSRCADDR<7:0>							

Legend:			
R = Readable bit	W = Writable bit	U = Unimplemented bit, read as ‘0’	
-n = Value at POR	‘1’ = Bit is set	‘0’ = Bit is cleared	x = Bit is unknown

bit 31-0 **NVMSRCADDR<31:0>:** Source Data Address bits
The system physical address of the data to be programmed into the Flash when the NVMOP<3:0> bits (NVMCON<3:0>) are set to perform row programming.

© 2009-2013 Microchip Technology Inc.

6.0 RESETS

Note 1: This data sheet summarizes the features of the PIC32MX5XX/6XX/7XX family of devices. It is not intended to be a comprehensive reference source. To complement the information in this data sheet, refer to **Section 7. "Resets"** (DS60001118) in the *"PIC32 Family Reference Manual"*, which is available from the Microchip web site (www.microchip.com/PIC32).

2: Some registers and associated bits described in this section may not be available on all devices. Refer to **Section 4.0 "Memory Organization"** in this data sheet for device-specific register and bit information.

The Reset module combines all Reset sources and controls the device Master Reset signal, SYSRST. The following is a list of device Reset sources:

- Power-on Reset (POR)
- Master Clear Reset pin ($\overline{\text{MCLR}}$)
- Software Reset (SWR)
- Watchdog Timer Reset (WDTR)
- Brown-out Reset (BOR)
- Configuration Mismatch Reset (CMR)

A simplified block diagram of the Reset module is illustrated in Figure 6-1.

FIGURE 6-1: SYSTEM RESET BLOCK DIAGRAM

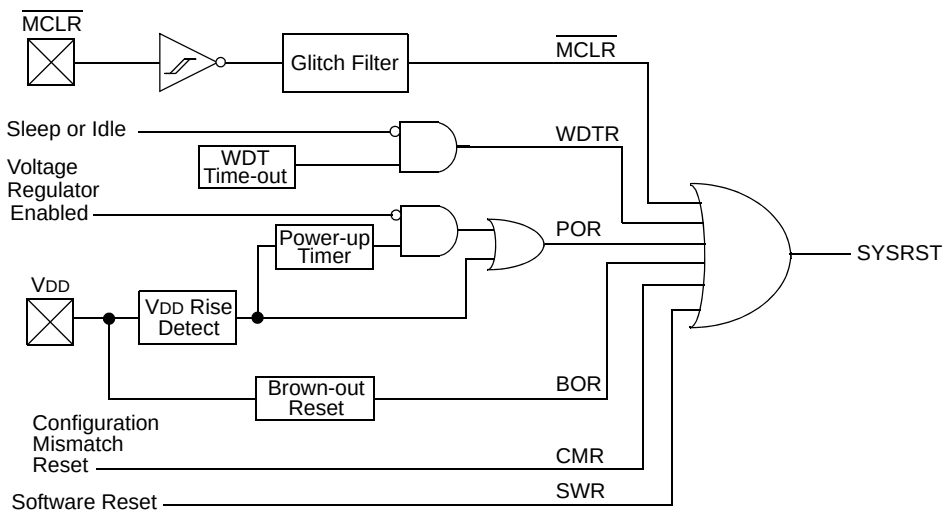

6.1 Control Registers

REGISTER 6-1: RCON: RESET CONTROL REGISTER

Bit Range	Bit 31/23/15/7	Bit 30/22/14/6	Bit 29/21/13/5	Bit 28/20/12/4	Bit 27/19/11/3	Bit 26/18/10/2	Bit 25/17/9/1	Bit 24/16/8/0
31:24	U-0	U-0	U-0	U-0	U-0	U-0	U-0	U-0
	—	—	—	—	—	—	—	—
23:16	U-0	U-0	U-0	U-0	U-0	U-0	U-0	U-0
	—	—	—	—	—	—	—	—
15:8	U-0	U-0	U-0	U-0	U-0	U-0	R/W-0, HS	R/W-0
	—	—	—	—	—	—	CMR	VREGS
7:0	R/W-0, HS	R/W-0, HS	U-0	R/W-0, HS	R/W-0, HS	R/W-0, HS	R/W-1, HS	R/W-1, HS
	EXTR	SWR	—	WDTO	SLEEP	IDLE	BOR(1)	POR(1)

Legend:	HS = Set by hardware		
R = Readable bit	W = Writable bit	U = Unimplemented bit, read as ‘0’	
-n = Value at POR	‘1’ = Bit is set	‘0’ = Bit is cleared	x = Bit is unknown

bit 31-10 **Unimplemented:** Read as ‘0’

bit 9 **CMR:** Configuration Mismatch Reset Flag bit
1 = Configuration mismatch Reset has occurred
0 = Configuration mismatch Reset has not occurred

bit 8 **VREGS:** Voltage Regulator Standby Enable bit
1 = Regulator is enabled and is on during Sleep mode
0 = Regulator is disabled and is off during Sleep mode

bit 7 **EXTR:** External Reset ($\overline{\text{MCLR}}$) Pin Flag bit
1 = Master Clear (pin) Reset has occurred
0 = Master Clear (pin) Reset has not occurred

bit 6 **SWR:** Software Reset Flag bit
1 = Software Reset was executed
0 = Software Reset was not executed

bit 5 **Unimplemented:** Read as ‘0’

bit 4 **WDTO:** Watchdog Timer Time-out Flag bit
1 = WDT Time-out has occurred
0 = WDT Time-out has not occurred

bit 3 **SLEEP:** Wake From Sleep Flag bit
1 = Device was in Sleep mode
0 = Device was not in Sleep mode

bit 2 **IDLE:** Wake From Idle Flag bit
1 = Device was in Idle mode
0 = Device was not in Idle mode

bit 1 **BOR:** Brown-out Reset Flag bit(1)
1 = Brown-out Reset has occurred
0 = Brown-out Reset has not occurred

bit 0 **POR:** Power-on Reset Flag bit(1)
1 = Power-on Reset has occurred
0 = Power-on Reset has not occurred

Note 1: User software must clear this bit to view the next detection.

© 2009-2013 Microchip Technology Inc.

REGISTER 6-2: RSWRST: SOFTWARE RESET REGISTER

Bit Range	Bit 31/23/15/7	Bit 30/22/14/6	Bit 29/21/13/5	Bit 28/20/12/4	Bit 27/19/11/3	Bit 26/18/10/2	Bit 25/17/9/1	Bit 24/16/8/0
31:24	U-0	U-0	U-0	U-0	U-0	U-0	U-0	U-0
	—	—	—	—	—	—	—	—
23:16	U-0	U-0	U-0	U-0	U-0	U-0	U-0	U-0
	—	—	—	—	—	—	—	—
15:8	U-0	U-0	U-0	U-0	U-0	U-0	U-0	U-0
	—	—	—	—	—	—	—	—
7:0	U-0	U-0	U-0	U-0	U-0	U-0	U-0	W-0, HC
	—	—	—	—	—	—	—	SWRST(1)

Legend:	HC = Cleared by hardware		
R = Readable bit	W = Writable bit	U = Unimplemented bit, read as ‘0’	
-n = Value at POR	‘1’ = Bit is set	‘0’ = Bit is cleared	x = Bit is unknown

bit 31-1 **Unimplemented:** Read as ‘0’

bit 0 **SWRST:** Software Reset Trigger bit(1)
1 = Enable software Reset event
0 = No effect

Note 1: The system unlock sequence must be performed before the SWRST bit can be written. Refer to **Section 6. “Oscillator”** (DS60001112) in the *“PIC32 Family Reference Manual”* for details.

NOTES:

© 2009-2013 Microchip Technology Inc.

7.0 INTERRUPT CONTROLLER

Note 1: This data sheet summarizes the features of the PIC32MX5XX/6XX/7XX family of devices. It is not intended to be a comprehensive reference source. To complement the information in this data sheet, refer to **Section 8. "Interrupts"** (DS60001108) in the *"PIC32 Family Reference Manual"*, which is available from the Microchip web site (www.microchip.com/PIC32).

2: Some registers and associated bits described in this section may not be available on all devices. Refer to **Section 4.0 "Memory Organization"** in this data sheet for device-specific register and bit information.

PIC32MX5XX/6XX/7XX devices generate interrupt requests in response to interrupt events from peripheral modules. The interrupt control module exists externally to the CPU logic and prioritizes the interrupt events before presenting them to the CPU.

The Interrupt Controller module includes the following features:

- Up to 96 interrupt sources
- Up to 64 interrupt vectors
- Single and multi-vector mode operations
- Five external interrupts with edge polarity control
- Interrupt proximity timer
- Seven user-selectable priority levels for each vector
- Four user-selectable subpriority levels within each priority
- Dedicated shadow set for user-selectable priority level
- Software can generate any interrupt
- User-configurable interrupt vector table location
- User-configurable interrupt vector spacing

A simplified block diagram of the Interrupt Controller module is illustrated in Figure 7-1.

FIGURE 7-1: INTERRUPT CONTROLLER MODULE

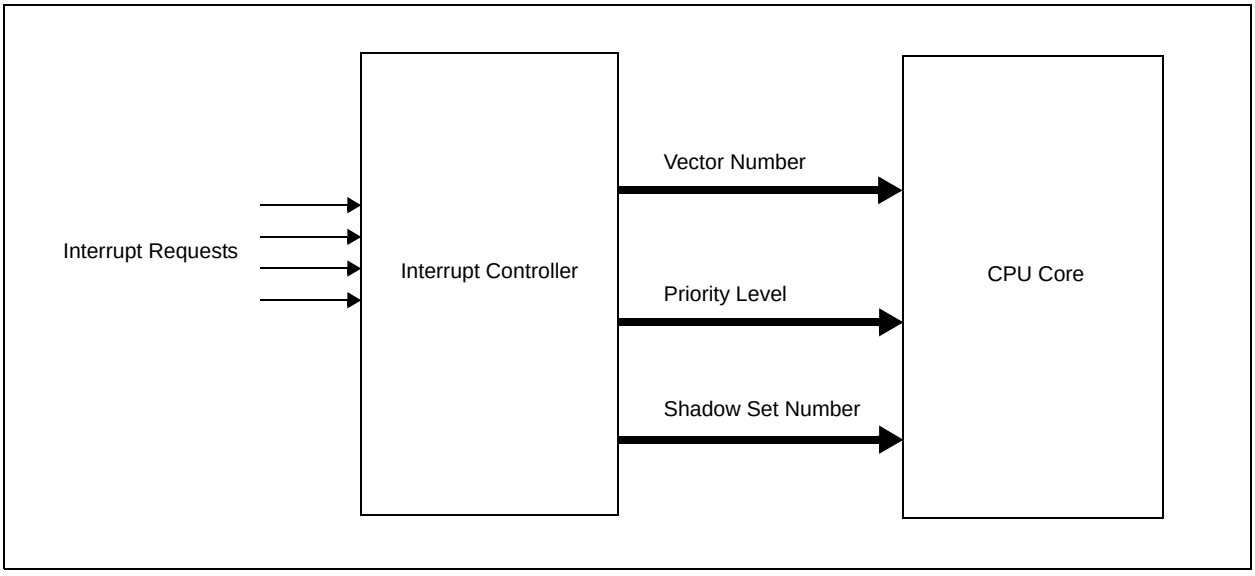

TABLE 7-1: INTERRUPT IRQ, VECTOR AND BIT LOCATION

Interrupt Source(1)	IRQ Number	Vector Number	Interrupt Bit Location			
			Flag	Enable	Priority	Sub-Priority
Highest Natural Order Priority						
CT – Core Timer Interrupt	0	0	IFS0<0>	IEC0<0>	IPC0<4:2>	IPC0<1:0>
CS0 – Core Software Interrupt 0	1	1	IFS0<1>	IEC0<1>	IPC0<12:10>	IPC0<9:8>
CS1 – Core Software Interrupt 1	2	2	IFS0<2>	IEC0<2>	IPC0<20:18>	IPC0<17:16>
INT0 – External Interrupt 0	3	3	IFS0<3>	IEC0<3>	IPC0<28:26>	IPC0<25:24>
T1 – Timer1	4	4	IFS0<4>	IEC0<4>	IPC1<4:2>	IPC1<1:0>
IC1 – Input Capture 1	5	5	IFS0<5>	IEC0<5>	IPC1<12:10>	IPC1<9:8>
OC1 – Output Compare 1	6	6	IFS0<6>	IEC0<6>	IPC1<20:18>	IPC1<17:16>
INT1 – External Interrupt 1	7	7	IFS0<7>	IEC0<7>	IPC1<28:26>	IPC1<25:24>
T2 – Timer2	8	8	IFS0<8>	IEC0<8>	IPC2<4:2>	IPC2<1:0>
IC2 – Input Capture 2	9	9	IFS0<9>	IEC0<9>	IPC2<12:10>	IPC2<9:8>
OC2 – Output Compare 2	10	10	IFS0<10>	IEC0<10>	IPC2<20:18>	IPC2<17:16>
INT2 – External Interrupt 2	11	11	IFS0<11>	IEC0<11>	IPC2<28:26>	IPC2<25:24>
T3 – Timer3	12	12	IFS0<12>	IEC0<12>	IPC3<4:2>	IPC3<1:0>
IC3 – Input Capture 3	13	13	IFS0<13>	IEC0<13>	IPC3<12:10>	IPC3<9:8>
OC3 – Output Compare 3	14	14	IFS0<14>	IEC0<14>	IPC3<20:18>	IPC3<17:16>
INT3 – External Interrupt 3	15	15	IFS0<15>	IEC0<15>	IPC3<28:26>	IPC3<25:24>
T4 – Timer4	16	16	IFS0<16>	IEC0<16>	IPC4<4:2>	IPC4<1:0>
IC4 – Input Capture 4	17	17	IFS0<17>	IEC0<17>	IPC4<12:10>	IPC4<9:8>
OC4 – Output Compare 4	18	18	IFS0<18>	IEC0<18>	IPC4<20:18>	IPC4<17:16>
INT4 – External Interrupt 4	19	19	IFS0<19>	IEC0<19>	IPC4<28:26>	IPC4<25:24>
T5 – Timer5	20	20	IFS0<20>	IEC0<20>	IPC5<4:2>	IPC5<1:0>
IC5 – Input Capture 5	21	21	IFS0<21>	IEC0<21>	IPC5<12:10>	IPC5<9:8>
OC5 – Output Compare 5	22	22	IFS0<22>	IEC0<22>	IPC5<20:18>	IPC5<17:16>
SPI1E – SPI1 Fault	23	23	IFS0<23>	IEC0<23>	IPC5<28:26>	IPC5<25:24>
SPI1RX – SPI1 Receive Done	24	23	IFS0<24>	IEC0<24>	IPC5<28:26>	IPC5<25:24>
SPI1TX – SPI1 Transfer Done	25	23	IFS0<25>	IEC0<25>	IPC5<28:26>	IPC5<25:24>
U1E – UART1 Error SPI3E – SPI3 Fault I2C3B – I2C3 Bus Collision Event	26	24	IFS0<26>	IEC0<26>	IPC6<4:2>	IPC6<1:0>
U1RX – UART1 Receiver SPI3RX – SPI3 Receive Done I2C3S – I2C3 Slave Event	27	24	IFS0<27>	IEC0<27>	IPC6<4:2>	IPC6<1:0>
U1TX – UART1 Transmitter SPI3TX – SPI3 Transfer Done I2C3M – I2C3 Master Event	28	24	IFS0<28>	IEC0<28>	IPC6<4:2>	IPC6<1:0>
I2C1B – I2C1 Bus Collision Event	29	25	IFS0<29>	IEC0<29>	IPC6<12:10>	IPC6<9:8>
I2C1S – I2C1 Slave Event	30	25	IFS0<30>	IEC0<30>	IPC6<12:10>	IPC6<9:8>
I2C1M – I2C1 Master Event	31	25	IFS0<31>	IEC0<31>	IPC6<12:10>	IPC6<9:8>
CN – Input Change Interrupt	32	26	IFS1<0>	IEC1<0>	IPC6<20:18>	IPC6<17:16>

Note 1: Not all interrupt sources are available on all devices. See **TABLE 1: "PIC32 USB and CAN – Features"**, **TABLE 2: "PIC32 USB and Ethernet – Features"** and **TABLE 3: "PIC32 USB, Ethernet and CAN – Features"** for the list of available peripherals.

© 2009-2013 Microchip Technology Inc.

TABLE 7-1: INTERRUPT IRQ, VECTOR AND BIT LOCATION (CONTINUED)

Interrupt Source(1)	IRQ Number	Vector Number	Interrupt Bit Location			
			Flag	Enable	Priority	Sub-Priority
AD1 – ADC1 Convert Done	33	27	IFS1<1>	IEC1<1>	IPC6<28:26>	IPC6<25:24>
PMP – Parallel Master Port	34	28	IFS1<2>	IEC1<2>	IPC7<4:2>	IPC7<1:0>
CMP1 – Comparator Interrupt	35	29	IFS1<3>	IEC1<3>	IPC7<12:10>	IPC7<9:8>
CMP2 – Comparator Interrupt	36	30	IFS1<4>	IEC1<4>	IPC7<20:18>	IPC7<17:16>
U3E – UART2A Error SPI2E – SPI2 Fault I2C4B – I2C4 Bus Collision Event	37	31	IFS1<5>	IEC1<5>	IPC7<28:26>	IPC7<25:24>
U3RX – UART2A Receiver SPI2RX – SPI2 Receive Done I2C4S – I2C4 Slave Event	38	31	IFS1<6>	IEC1<6>	IPC7<28:26>	IPC7<25:24>
U3TX – UART2A Transmitter SPI2TX – SPI2 Transfer Done IC4M – I2C4 Master Event	39	31	IFS1<7>	IEC1<7>	IPC7<28:26>	IPC7<25:24>
U2E – UART3A Error SPI4E – SPI4 Fault I2C5B – I2C5 Bus Collision Event	40	32	IFS1<8>	IEC1<8>	IPC8<4:2>	IPC8<1:0>
U2RX – UART3A Receiver SPI4RX – SPI4 Receive Done I2C5S – I2C5 Slave Event	41	32	IFS1<9>	IEC1<9>	IPC8<4:2>	IPC8<1:0>
U2TX – UART3A Transmitter SPI4TX – SPI4 Transfer Done IC5M – I2C5 Master Event	42	32	IFS1<10>	IEC1<10>	IPC8<4:2>	IPC8<1:0>
I2C2B – I2C2 Bus Collision Event	43	33	IFS1<11>	IEC1<11>	IPC8<12:10>	IPC8<9:8>
I2C2S – I2C2 Slave Event	44	33	IFS1<12>	IEC1<12>	IPC8<12:10>	IPC8<9:8>
I2C2M – I2C2 Master Event	45	33	IFS1<13>	IEC1<13>	IPC8<12:10>	IPC8<9:8>
FSCM – Fail-Safe Clock Monitor	46	34	IFS1<14>	IEC1<14>	IPC8<20:18>	IPC8<17:16>
RTCC – Real-Time Clock and Calendar	47	35	IFS1<15>	IEC1<15>	IPC8<28:26>	IPC8<25:24>
DMA0 – DMA Channel 0	48	36	IFS1<16>	IEC1<16>	IPC9<4:2>	IPC9<1:0>
DMA1 – DMA Channel 1	49	37	IFS1<17>	IEC1<17>	IPC9<12:10>	IPC9<9:8>
DMA2 – DMA Channel 2	50	38	IFS1<18>	IEC1<18>	IPC9<20:18>	IPC9<17:16>
DMA3 – DMA Channel 3	51	39	IFS1<19>	IEC1<19>	IPC9<28:26>	IPC9<25:24>
DMA4 – DMA Channel 4	52	40	IFS1<20>	IEC1<20>	IPC10<4:2>	IPC10<1:0>
DMA5 – DMA Channel 5	53	41	IFS1<21>	IEC1<21>	IPC10<12:10>	IPC10<9:8>
DMA6 – DMA Channel 6	54	42	IFS1<22>	IEC1<22>	IPC10<20:18>	IPC10<17:16>
DMA7 – DMA Channel 7	55	43	IFS1<23>	IEC1<23>	IPC10<28:26>	IPC10<25:24>
FCE – Flash Control Event	56	44	IFS1<24>	IEC1<24>	IPC11<4:2>	IPC11<1:0>
USB – USB Interrupt	57	45	IFS1<25>	IEC1<25>	IPC11<12:10>	IPC11<9:8>
CAN1 – Control Area Network 1	58	46	IFS1<26>	IEC1<26>	IPC11<20:18>	IPC11<17:16>
CAN2 – Control Area Network 2	59	47	IFS1<27>	IEC1<27>	IPC11<28:26>	IPC11<25:24>
ETH – Ethernet Interrupt	60	48	IFS1<28>	IEC1<28>	IPC12<4:2>	IPC12<1:0>
IC1E – Input Capture 1 Error	61	5	IFS1<29>	IEC1<29>	IPC1<12:10>	IPC1<9:8>
IC2E – Input Capture 2 Error	62	9	IFS1<30>	IEC1<30>	IPC2<12:10>	IPC2<9:8>

Note 1: Not all interrupt sources are available on all devices. See **TABLE 1: "PIC32 USB and CAN – Features"**, **TABLE 2: "PIC32 USB and Ethernet – Features"** and **TABLE 3: "PIC32 USB, Ethernet and CAN – Features"** for the list of available peripherals.

TABLE 7-1: INTERRUPT IRQ, VECTOR AND BIT LOCATION (CONTINUED)

Interrupt Source(1)	IRQ Number	Vector Number	Interrupt Bit Location			
			Flag	Enable	Priority	Sub-Priority
IC3E – Input Capture 3 Error	63	13	IFS1<31>	IEC1<31>	IPC3<12:10>	IPC3<9:8>
IC4E – Input Capture 4 Error	64	17	IFS2<0>	IEC2<0>	IPC4<12:10>	IPC4<9:8>
IC4E – Input Capture 5 Error	65	21	IFS2<1>	IEC2<1>	IPC5<12:10>	IPC5<9:8>
PMPE – Parallel Master Port Error	66	28	IFS2<2>	IEC2<2>	IPC7<4:2>	IPC7<1:0>
U4E – UART4 Error	67	49	IFS2<3>	IEC2<3>	IPC12<12:10>	IPC12<9:8>
U4RX – UART4 Receiver	68	49	IFS2<4>	IEC2<4>	IPC12<12:10>	IPC12<9:8>
U4TX – UART4 Transmitter	69	49	IFS2<5>	IEC2<5>	IPC12<12:10>	IPC12<9:8>
U6E – UART6 Error	70	50	IFS2<6>	IEC2<6>	IPC12<20:18>	IPC12<17:16>
U6RX – UART6 Receiver	71	50	IFS2<7>	IEC2<7>	IPC12<20:18>	IPC12<17:16>
U6TX – UART6 Transmitter	72	50	IFS2<8>	IEC2<8>	IPC12<20:18>	IPC12<17:16>
U5E – UART5 Error	73	51	IFS2<9>	IEC2<9>	IPC12<28:26>	IPC12<25:24>
U5RX – UART5 Receiver	74	51	IFS2<10>	IEC2<10>	IPC12<28:26>	IPC12<25:24>
U5TX – UART5 Transmitter	75	51	IFS2<11>	IEC2<11>	IPC12<28:26>	IPC12<25:24>
(Reserved)	—	—	—	—	—	—
Lowest Natural Order Priority						

Note 1: Not all interrupt sources are available on all devices. See **TABLE 1: "PIC32 USB and CAN – Features"**, **TABLE 2: "PIC32 USB and Ethernet – Features"** and **TABLE 3: "PIC32 USB, Ethernet and CAN – Features"** for the list of available peripherals.

© 2009-2013 Microchip Technology Inc.

7.1 Control Registers

REGISTER 7-1: INTCON: INTERRUPT CONTROL REGISTER

Bit Range	Bit 31/23/15/7	Bit 30/22/14/6	Bit 29/21/13/5	Bit 28/20/12/4	Bit 27/19/11/3	Bit 26/18/10/2	Bit 25/17/9/1	Bit 24/16/8/0
31:24	U-0	U-0	U-0	U-0	U-0	U-0	U-0	U-0
	—	—	—	—	—	—	—	—
23:16	U-0	U-0	U-0	U-0	U-0	U-0	U-0	R/W-0
	—	—	—	—	—	—	—	SS0
15:8	U-0	U-0	U-0	R/W-0	U-0	R/W-0	R/W-0	R/W-0
	—	—	—	MVEC	—	TPC<2:0>		
7:0	U-0	U-0	U-0	R/W-0	R/W-0	R/W-0	R/W-0	R/W-0
	—	—	—	INT4EP	INT3EP	INT2EP	INT1EP	INT0EP

Legend:			
R = Readable bit	W = Writable bit	U = Unimplemented bit, read as ‘0’	
-n = Value at POR	‘1’ = Bit is set	‘0’ = Bit is cleared	x = Bit is unknown

bit 31-17 **Unimplemented:** Read as ‘0’

bit 16 **SS0:** Single Vector Shadow Register Set bit
1 = Single vector is presented with a shadow register set
0 = Single vector is not presented with a shadow register set

bit 15-13 **Unimplemented:** Read as ‘0’

bit 12 **MVEC:** Multiple Vector Configuration bit
1 = Interrupt controller configured for Multi-vector mode
0 = Interrupt controller configured for Single-vector mode

bit 11 **Unimplemented:** Read as ‘0’

bit 10-8 **TPC<2:0>:** Interrupt Proximity Timer Control bits
111 = Interrupts of group priority 7 or lower start the Interrupt Proximity timer
110 = Interrupts of group priority 6 or lower start the Interrupt Proximity timer
101 = Interrupts of group priority 5 or lower start the Interrupt Proximity timer
100 = Interrupts of group priority 4 or lower start the Interrupt Proximity timer
011 = Interrupts of group priority 3 or lower start the Interrupt Proximity timer
010 = Interrupts of group priority 2 or lower start the Interrupt Proximity timer
001 = Interrupts of group priority 1 start the Interrupt Proximity timer
000 = Disables Interrupt Proximity timer

bit 7-5 **Unimplemented:** Read as ‘0’

bit 4 **INT4EP:** External Interrupt 4 Edge Polarity Control bit
1 = Rising edge
0 = Falling edge

bit 3 **INT3EP:** External Interrupt 3 Edge Polarity Control bit
1 = Rising edge
0 = Falling edge

bit 2 **INT2EP:** External Interrupt 2 Edge Polarity Control bit
1 = Rising edge
0 = Falling edge

bit 1 **INT1EP:** External Interrupt 1 Edge Polarity Control bit
1 = Rising edge
0 = Falling edge

bit 0 **INT0EP:** External Interrupt 0 Edge Polarity Control bit
1 = Rising edge
0 = Falling edge

REGISTER 7-2: INTSTAT: INTERRUPT STATUS REGISTER

Bit Range	Bit 31/23/15/7	Bit 30/22/14/6	Bit 29/21/13/5	Bit 28/20/12/4	Bit 27/19/11/3	Bit 26/18/10/2	Bit 25/17/9/1	Bit 24/16/8/0
31:24	U-0	U-0	U-0	U-0	U-0	U-0	U-0	U-0
	—	—	—	—	—	—	—	—
23:16	U-0	U-0	U-0	U-0	U-0	U-0	U-0	U-0
	—	—	—	—	—	—	—	—
15:8	U-0	U-0	U-0	U-0	U-0	R/W-0	R/W-0	R/W-0
	—	—	—	—	—	RIPL<2:0>(1)		
7:0	U-0	U-0	R/W-0	R/W-0	R/W-0	R/W-0	R/W-0	R/W-0
	—	—	VEC<5:0>(1)					

Legend:			
R = Readable bit	W = Writable bit	U = Unimplemented bit, read as ‘0’	
-n = Value at POR	‘1’ = Bit is set	‘0’ = Bit is cleared	x = Bit is unknown

bit 31-11 **Unimplemented:** Read as ‘0’

bit 10-8 **RIPL<2:0>:** Requested Priority Level bits(1)

111-000 = The priority level of the latest interrupt presented to the CPU

bit 7-6 **Unimplemented:** Read as ‘0’

bit 5-0 **VEC<5:0>:** Interrupt Vector bits(1)

11111-00000 = The interrupt vector that is presented to the CPU

Note 1: This value should only be used when the interrupt controller is configured for Single-vector mode.

REGISTER 7-3: TPTMR: TEMPORAL PROXIMITY TIMER REGISTER

Bit Range	Bit 31/23/15/7	Bit 30/22/14/6	Bit 29/21/13/5	Bit 28/20/12/4	Bit 27/19/11/3	Bit 26/18/10/2	Bit 25/17/9/1	Bit 24/16/8/0
31:24	R/W-0	R/W-0	R/W-0	R/W-0	R/W-0	R/W-0	R/W-0	R/W-0
	TPTMR<31:24>							
23:16	R/W-0	R/W-0	R/W-0	R/W-0	R/W-0	R/W-0	R/W-0	R/W-0
	TPTMR<23:16>							
15:8	R/W-0	R/W-0	R/W-0	R/W-0	R/W-0	R/W-0	R/W-0	R/W-0
	TPTMR<15:8>							
7:0	R/W-0	R/W-0	R/W-0	R/W-0	R/W-0	R/W-0	R/W-0	R/W-0
	TPTMR<7:0>							

Legend:			
R = Readable bit	W = Writable bit	U = Unimplemented bit, read as ‘0’	
-n = Value at POR	‘1’ = Bit is set	‘0’ = Bit is cleared	x = Bit is unknown

bit 31-0 **TPTMR<31:0>:** Temporal Proximity Timer Reload bits
Used by the Temporal Proximity Timer as a reload value when the Temporal Proximity timer is triggered by an interrupt event.

© 2009-2013 Microchip Technology Inc.

REGISTER 7-4: IFSx: INTERRUPT FLAG STATUS REGISTER

Bit Range	Bit 31/23/15/7	Bit 30/22/14/6	Bit 29/21/13/5	Bit 28/20/12/4	Bit 27/19/11/3	Bit 26/18/10/2	Bit 25/17/9/1	Bit 24/16/8/0
31:24	R/W-0	R/W-0	R/W-0	R/W-0	R/W-0	R/W-0	R/W-0	R/W-0
	IFS31	IFS30	IFS29	IFS28	IFS27	IFS26	IFS25	IFS24
23:16	R/W-0	R/W-0	R/W-0	R/W-0	R/W-0	R/W-0	R/W-0	R/W-0
	IFS23	IFS22	IFS21	IFS20	IFS19	IFS18	IFS17	IFS16
15:8	R/W-0	R/W-0	R/W-0	R/W-0	R/W-0	R/W-0	R/W-0	R/W-0
	IFS15	IFS14	IFS13	IFS12	IFS11	IFS10	IFS09	IFS08
7:0	R/W-0	R/W-0	R/W-0	R/W-0	R/W-0	R/W-0	R/W-0	R/W-0
	IFS07	IFS06	IFS05	IFS04	IFS03	IFS02	IFS01	IFS00

Legend:			
R = Readable bit	W = Writable bit	U = Unimplemented bit, read as ‘0’	
-n = Value at POR	‘1’ = Bit is set	‘0’ = Bit is cleared	x = Bit is unknown

bit 31-0 **IFS31-IFS00:** Interrupt Flag Status bits
`1` = Interrupt request has occurred
`0` = Interrupt request has not occurred

Note: This register represents a generic definition of the IFSx register. Refer to Table 7-1 for the exact bit definitions.

REGISTER 7-5: IECx: INTERRUPT ENABLE CONTROL REGISTER

Bit Range	Bit 31/23/15/7	Bit 30/22/14/6	Bit 29/21/13/5	Bit 28/20/12/4	Bit 27/19/11/3	Bit 26/18/10/2	Bit 25/17/9/1	Bit 24/16/8/0
31:24	R/W-0	R/W-0	R/W-0	R/W-0	R/W-0	R/W-0	R/W-0	R/W-0
	IEC31	IEC30	IEC29	IEC28	IEC27	IEC26	IEC25	IEC24
23:16	R/W-0	R/W-0	R/W-0	R/W-0	R/W-0	R/W-0	R/W-0	R/W-0
	IEC23	IEC22	IEC21	IEC20	IEC19	IEC18	IEC17	IEC16
15:8	R/W-0	R/W-0	R/W-0	R/W-0	R/W-0	R/W-0	R/W-0	R/W-0
	IEC15	IEC14	IEC13	IEC12	IEC11	IEC10	IEC09	IEC08
7:0	R/W-0	R/W-0	R/W-0	R/W-0	R/W-0	R/W-0	R/W-0	R/W-0
	IEC07	IEC06	IEC05	IEC04	IEC03	IEC02	IEC01	IEC00

Legend:			
R = Readable bit	W = Writable bit	U = Unimplemented bit, read as ‘0’	
-n = Value at POR	‘1’ = Bit is set	‘0’ = Bit is cleared	x = Bit is unknown

bit 31-0 **IEC31-IEC00:** Interrupt Enable bits
`1` = Interrupt is enabled
`0` = Interrupt is disabled

Note: This register represents a generic definition of the IECx register. Refer to Table 7-1 for the exact bit definitions.

REGISTER 7-6: IPCx: INTERRUPT PRIORITY CONTROL REGISTER

Bit Range	Bit 31/23/15/7	Bit 30/22/14/6	Bit 29/21/13/5	Bit 28/20/12/4	Bit 27/19/11/3	Bit 26/18/10/2	Bit 25/17/9/1	Bit 24/16/8/0
31:24	U-0	U-0	U-0	R/W-0	R/W-0	R/W-0	R/W-0	R/W-0
	—	—	—	IP03<2:0>			IS03<1:0>	
23:16	U-0	U-0	U-0	R/W-0	R/W-0	R/W-0	R/W-0	R/W-0
	—	—	—	IP02<2:0>			IS02<1:0>	
15:8	U-0	U-0	U-0	R/W-0	R/W-0	R/W-0	R/W-0	R/W-0
	—	—	—	IP01<2:0>			IS01<1:0>	
7:0	U-0	U-0	U-0	R/W-0	R/W-0	R/W-0	R/W-0	R/W-0
	—	—	—	IP00<2:0>			IS00<1:0>	

Legend:			
R = Readable bit	W = Writable bit	U = Unimplemented bit, read as ‘0’	
-n = Value at POR	‘1’ = Bit is set	‘0’ = Bit is cleared	x = Bit is unknown

bit 31-29 **Unimplemented:** Read as ‘0’

bit 28-26 **IP03<2:0>:** Interrupt Priority bits
111 = Interrupt priority is 7
•
•
•
010 = Interrupt priority is 2
001 = Interrupt priority is 1
000 = Interrupt is disabled

bit 25-24 **IS03<1:0>:** Interrupt Subpriority bits
11 = Interrupt subpriority is 3
10 = Interrupt subpriority is 2
01 = Interrupt subpriority is 1
00 = Interrupt subpiority is 0

bit 23-21 **Unimplemented:** Read as ‘0’

bit 20-18 **IP02<2:0>:** Interrupt Priority bits
111 = Interrupt priority is 7
•
•
•
010 = Interrupt priority is 2
001 = Interrupt priority is 1
000 = Interrupt is disabled

bit 17-16 **IS02<1:0>:** Interrupt Subpriority bits
11 = Interrupt subpriority is 3
10 = Interrupt subpriority is 2
01 = Interrupt subpriority is 1
00 = Interrupt subpriority is 0

bit 15-13 **Unimplemented:** Read as ‘0’

Note: This register represents a generic definition of the IPCx register. Refer to Table 7-1 for the exact bit definitions.

© 2009-2013 Microchip Technology Inc.

REGISTER 7-6: IPCx: INTERRUPT PRIORITY CONTROL REGISTER (CONTINUED)

bit 12-10 **IP01<2:0>:** Interrupt Priority bits
111 = Interrupt priority is 7
•
•
•
010 = Interrupt priority is 2
001 = Interrupt priority is 1
000 = Interrupt is disabled

bit 9-8 **IS01<1:0>:** Interrupt Subpriority bits
11 = Interrupt subpriority is 3
10 = Interrupt subpriority is 2
01 = Interrupt subpriority is 1
00 = Interrupt subpriority is 0

bit 7-5 **Unimplemented:** Read as '0'

bit 4-2 **IP00<2:0>:** Interrupt Priority bits
111 = Interrupt priority is 7
•
•
•
010 = Interrupt priority is 2
001 = Interrupt priority is 1
000 = Interrupt is disabled

bit 1-0 **IS00<1:0>:** Interrupt Subpriority bits
11 = Interrupt subpriority is 3
10 = Interrupt subpriority is 2
01 = Interrupt subpriority is 1
00 = Interrupt subpriority is 0

Note: This register represents a generic definition of the IPCx register. Refer to Table 7-1 for the exact bit definitions.

NOTES:

© 2009-2013 Microchip Technology Inc.

8.0 OSCILLATOR CONFIGURATION

Note 1: This data sheet summarizes the features of the PIC32MX5XX/6XX/7XX family of devices. It is not intended to be a comprehensive reference source. To complement the information in this data sheet, refer to **Section 6. "Oscillator"** (DS60001112) in the *"PIC32 Family Reference Manual"*, which is available from the Microchip web site (www.microchip.com/PIC32).

2: Some registers and associated bits described in this section may not be available on all devices. Refer to **Section 4.0 "Memory Organization"** in this data sheet for device-specific register and bit information.

The Oscillator module has the following features:

- A total of four external and internal oscillator options as clock sources
- On-chip PLL with user-selectable input divider, multiplier and output divider to boost operating frequency on select internal and external oscillator sources
- On-chip user-selectable divisor postscaler on select oscillator sources
- Software-controllable switching between various clock sources
- A Fail-Safe Clock Monitor (FSCM) that detects clock failure and permits safe application recovery or shutdown
- Dedicated On-Chip PLL for USB peripheral

Figure 8-1shows the Oscillator module block diagram.

FIGURE 8-1: OSCILLATOR BLOCK DIAGRAM

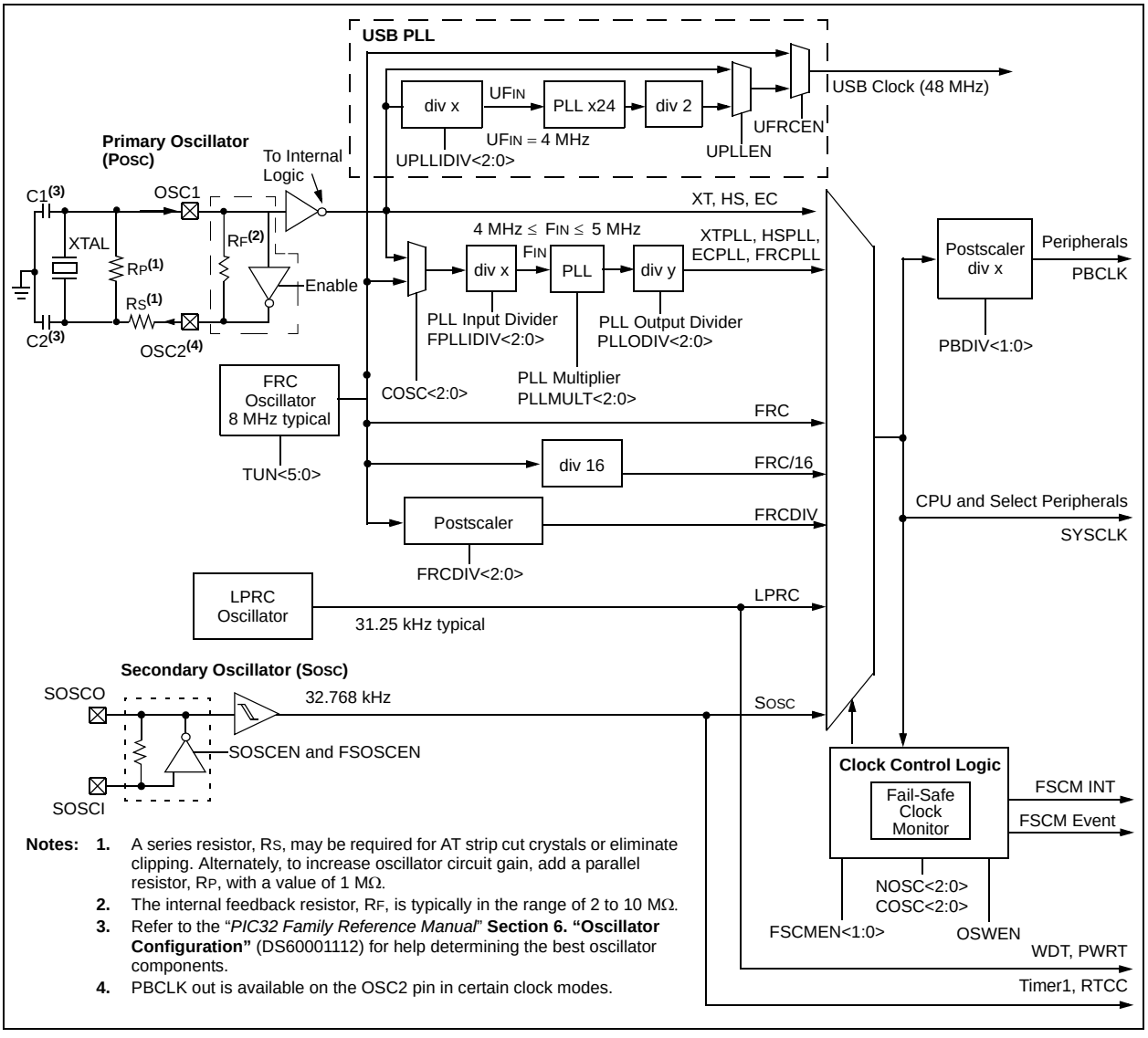

Notes:
1. A series resistor, RS, may be required for AT strip cut crystals or eliminate clipping. Alternately, to increase oscillator circuit gain, add a parallel resistor, RP, with a value of 1 MΩ.
2. The internal feedback resistor, RF, is typically in the range of 2 to 10 MΩ.
3. Refer to the "*PIC32 Family Reference Manual*" **Section 6. "Oscillator Configuration"** (DS60001112) for help determining the best oscillator components.
4. PBCLK out is available on the OSC2 pin in certain clock modes.

8.1 Control Registers

REGISTER 8-1: OSCCON: OSCILLATOR CONTROL REGISTER

Bit Range	Bit 31/23/15/7	Bit 30/22/14/6	Bit 29/21/13/5	Bit 28/20/12/4	Bit 27/19/11/3	Bit 26/18/10/2	Bit 25/17/9/1	Bit 24/16/8/0
31:24	U-0	U-0	R/W-y	R/W-y	R/W-y	R/W-0	R/W-0	R/W-1
	—	—	PLLODIV<2:0>			FRCDIV<2:0>		
23:16	U-0	R-0	R-1	R/W-y	R/W-y	R/W-y	R/W-y	R/W-y
	—	SOSCRDY	PBDIVRDY	PBDIV<1:0>		PLLMULT<2:0>		
15:8	U-0	R-0	R-0	R-0	U-0	R/W-y	R/W-y	R/W-y
	—	COSC<2:0>			—	NOSC<2:0>		
7:0	R/W-0	R-0	R-0	R/W-0	R/W-0	R/W-0	R/W-y	R/W-0
	CLKLOCK	ULOCK	SLOCK	SLPEN	CF	UFRCEN	SOSCEN	OSWEN

Legend:	y = Value set from Configuration bits on POR		
R = Readable bit	W = Writable bit	U = Unimplemented bit, read as ‘0’	
-n = Value at POR	‘1’ = Bit is set	‘0’ = Bit is cleared	x = Bit is unknown

bit 31-30 **Unimplemented:** Read as ‘0’

bit 29-27 **PLLODIV<2:0>:** Output Divider for PLL
- 111 = PLL output divided by 256
- 110 = PLL output divided by 64
- 101 = PLL output divided by 32
- 100 = PLL output divided by 16
- 011 = PLL output divided by 8
- 010 = PLL output divided by 4
- 001 = PLL output divided by 2
- 000 = PLL output divided by 1

bit 26-24 **FRCDIV<2:0>:** Internal Fast RC (FRC) Oscillator Clock Divider bits
- 111 = FRC divided by 256
- 110 = FRC divided by 64
- 101 = FRC divided by 32
- 100 = FRC divided by 16
- 011 = FRC divided by 8
- 010 = FRC divided by 4
- 001 = FRC divided by 2 (default setting)
- 000 = FRC divided by 1

bit 23 **Unimplemented:** Read as ‘0’

bit 22 **SOSCRDY:** Secondary Oscillator (SOSC) Ready Indicator bit
- 1 = Indicates that the Secondary Oscillator is running and is stable
- 0 = Secondary Oscillator is still warming up or is turned off

bit 21 **PBDIVRDY:** Peripheral Bus Clock (PBCLK) Divisor Ready bit
- 1 = PBDIV<1:0> bits can be written
- 0 = PBDIV<1:0> bits cannot be written

bit 20-19 **PBDIV<1:0>:** Peripheral Bus Clock (PBCLK) Divisor bits
- 11 = PBCLK is SYSCLK divided by 8 (default)
- 10 = PBCLK is SYSCLK divided by 4
- 01 = PBCLK is SYSCLK divided by 2
- 00 = PBCLK is SYSCLK divided by 1

Note: Writes to this register require an unlock sequence. Refer to **Section 6. “Oscillator”** (DS60001112) in the *“PIC32 Family Reference Manual”* for details.

© 2009-2013 Microchip Technology Inc.

REGISTER 8-1: OSCCON: OSCILLATOR CONTROL REGISTER (CONTINUED)

bit 18-16 **PLLMULT<2:0>:** Phase-Locked Loop (PLL) Multiplier bits

111 = Clock is multiplied by 24
110 = Clock is multiplied by 21
101 = Clock is multiplied by 20
100 = Clock is multiplied by 19
011 = Clock is multiplied by 18
010 = Clock is multiplied by 17
001 = Clock is multiplied by 16
000 = Clock is multiplied by 15

bit 15 **Unimplemented:** Read as '0'

bit 14-12 **COSC<2:0>:** Current Oscillator Selection bits

111 = Internal Fast RC (FRC) Oscillator divided by OSCCON<FRCDIV> bits
110 = Internal Fast RC (FRC) Oscillator divided by 16
101 = Internal Low-Power RC (LPRC) Oscillator
100 = Secondary Oscillator (SOSC)
011 = Primary Oscillator (POSC) with PLL module (XTPLL, HSPLL or ECPLL)
010 = Primary Oscillator (POSC) (XT, HS or EC)
001 = Internal Fast RC Oscillator with PLL module via Postscaler (FRCPLL)
000 = Internal Fast RC (FRC) Oscillator

bit 11 **Unimplemented:** Read as '0'

bit 10-8 **NOSC<2:0>:** New Oscillator Selection bits

111 = Internal Fast RC Oscillator (FRC) divided by OSCCON<FRCDIV> bits
110 = Internal Fast RC Oscillator (FRC) divided by 16
101 = Internal Low-Power RC (LPRC) Oscillator
100 = Secondary Oscillator (SOSC)
011 = Primary Oscillator with PLL module (XTPLL, HSPLL or ECPLL)
010 = Primary Oscillator (XT, HS or EC)
001 = Internal Fast Internal RC Oscillator with PLL module via Postscaler (FRCPLL)
000 = Internal Fast Internal RC Oscillator (FRC)

On Reset, these bits are set to the value of the FNOSC Configuration bits (DEVCFG1<2:0>).

bit 7 **CLKLOCK:** Clock Selection Lock Enable bit

If clock switching and monitoring is disabled (FCKSM<1:0> = 1x):
1 = Clock and PLL selections are locked
0 = Clock and PLL selections are not locked and may be modified

If clock switching and monitoring is enabled (FCKSM<1:0> = 0x):
Clock and PLL selections are never locked and may be modified.

bit 6 **ULOCK:** USB PLL Lock Status bit

1 = Indicates that the USB PLL module is in lock or USB PLL module start-up timer is satisfied
0 = Indicates that the USB PLL module is out of lock or USB PLL module start-up timer is in progress or USB PLL is disabled

bit 5 **SLOCK:** PLL Lock Status bit

1 = PLL module is in lock or PLL module start-up timer is satisfied
0 = PLL module is out of lock, PLL start-up timer is running or PLL is disabled

bit 4 **SLPEN:** Sleep Mode Enable bit

1 = Device will enter Sleep mode when a WAIT instruction is executed
0 = Device will enter Idle mode when a WAIT instruction is executed

bit 3 **CF:** Clock Fail Detect bit

1 = FSCM has detected a clock failure
0 = No clock failure has been detected

Note: Writes to this register require an unlock sequence. Refer to **Section 6. "Oscillator"** (DS60001112) in the *"PIC32 Family Reference Manual"* for details.

REGISTER 8-1: OSCCON: OSCILLATOR CONTROL REGISTER (CONTINUED)

bit 2 **UFRCEN:** USB FRC Clock Enable bit

1 = Enable FRC as the clock source for the USB clock source
0 = Use the Primary Oscillator or USB PLL as the USB clock source

bit 1 **SOSCEN:** Secondary Oscillator (SOSC) Enable bit

1 = Enable Secondary Oscillator
0 = Disable Secondary Oscillator

bit 0 **OSWEN:** Oscillator Switch Enable bit

1 = Initiate an oscillator switch to selection specified by NOSC<2:0> bits
0 = Oscillator switch is complete

Note: Writes to this register require an unlock sequence. Refer to **Section 6. "Oscillator"** (DS60001112) in the *"PIC32 Family Reference Manual"* for details.

© 2009-2013 Microchip Technology Inc.

REGISTER 8-2: OSCTUN: FRC TUNING REGISTER

Bit Range	Bit 31/23/15/7	Bit 30/22/14/6	Bit 29/21/13/5	Bit 28/20/12/4	Bit 27/19/11/3	Bit 26/18/10/2	Bit 25/17/9/1	Bit 24/16/8/0
31:24	U-0	U-0	U-0	U-0	U-0	U-0	U-0	U-0
	—	—	—	—	—	—	—	—
23:16	U-0	R-0	U-0	U-0	U-0	U-0	U-0	U-0
	—	—	—	—	—	—	—	—
15:8	U-0	R-0	U-0	U-0	U-0	U-0	U-0	U-0
	—	—	—	—	—	—	—	—
7:0	U-0	U-0	R/W-0	R/W-0	R/W-0	R/W-0	R/W-0	R/W-0
	—	—	TUN<5:0>(1)					

Legend:			
R = Readable bit	W = Writable bit	U = Unimplemented bit, read as ‘0’	
-n = Value at POR	‘1’ = Bit is set	‘0’ = Bit is cleared	x = Bit is unknown

bit 31-6 **Unimplemented:** Read as ‘0’

bit 5-0 **TUN<5:0>:** FRC Oscillator Tuning bits(1)

100000 = Center frequency -12.5%
100001 =
•
•
•
111111 =
000000 = Center frequency; Oscillator runs at minimal frequency (8 MHz)
000001 =
•
•
•
011110 =
011111 = Center frequency +12.5%

Note 1: OSCTUN functionality has been provided to help customers compensate for temperature effects on the FRC frequency over a wide range of temperatures. The tuning step size is an approximation, and is neither characterized, nor tested.

Note: Writes to this register require an unlock sequence. Refer to **Section 6. “Oscillator”** (DS60001112) in the *“PIC32 Family Reference Manual”* for details.

NOTES:

© 2009-2013 Microchip Technology Inc.

9.0 PREFETCH CACHE

Note 1: This data sheet summarizes the features of the PIC32MX5XX/6XX/7XX family of devices. It is not intended to be a comprehensive reference source. To complement the information in this data sheet, refer to **Section 4. "Prefetch Cache"** (DS60001119) in the *"PIC32 Family Reference Manual"*, which is available from the Microchip web site (www.microchip.com/PIC32).

2: Some registers and associated bits described in this section may not be available on all devices. Refer to **Section 4.0 "Memory Organization"** in this data sheet for device-specific register and bit information.

Prefetch cache increases performance for applications executing out of the cacheable program Flash memory regions by implementing instruction caching, constant data caching and instruction prefetching.

9.1 Features

- 16 fully-associative lockable cache lines
- 16-byte cache lines
- Up to four cache lines allocated to data
- Two cache lines with address mask to hold repeated instructions
- Pseudo-LRU replacement policy
- All cache lines are software writable
- 16-byte parallel memory fetch
- Predictive instruction prefetch

A simplified block diagram of the Prefetch Cache module is illustrated in Figure 9-1.

FIGURE 9-1: PREFETCH CACHE MODULE BLOCK DIAGRAM

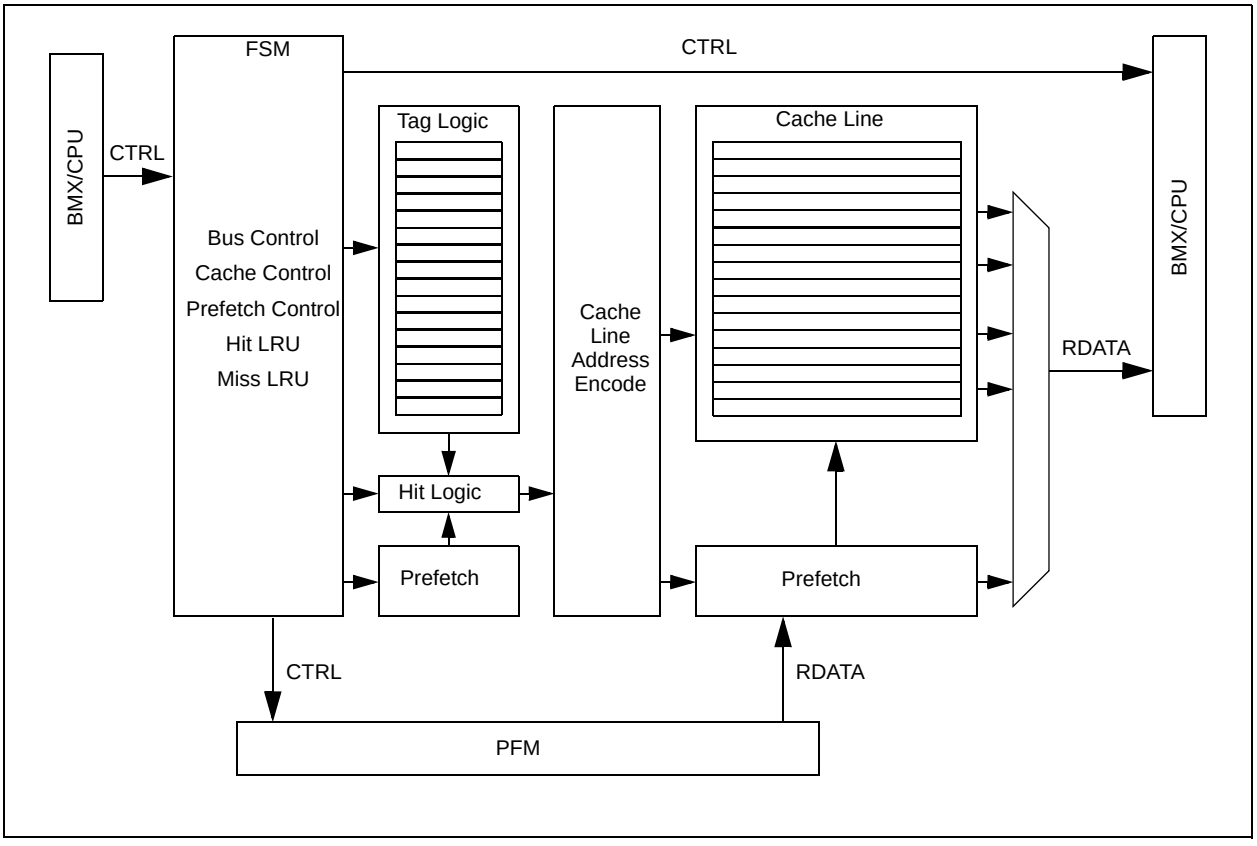

9.2 Control Registers

REGISTER 9-1: CHECON: CACHE CONTROL REGISTER

Bit Range	Bit 31/23/15/7	Bit 30/22/14/6	Bit 29/21/13/5	Bit 28/20/12/4	Bit 27/19/11/3	Bit 26/18/10/2	Bit 25/17/9/1	Bit 24/16/8/0
31:24	U-0	U-0	U-0	U-0	U-0	U-0	U-0	U-0
	—	—	—	—	—	—	—	—
23:16	U-0	U-0	U-0	U-0	U-0	U-0	U-0	R/W-0
	—	—	—	—	—	—	—	CHECOH
15:8	U-0	U-0	U-0	U-0	U-0	U-0	R/W-0	R/W-0
	—	—	—	—	—	—	DCSZ<1:0>	
7:0	U-0	U-0	R/W-0	R/W-0	U-0	R/W-1	R/W-1	R/W-1
	—	—	PREFEN<1:0>		—	PFMWS<2:0>		

Legend:			
R = Readable bit	W = Writable bit	U = Unimplemented bit, read as ‘0’	
-n = Value at POR	‘1’ = Bit is set	‘0’ = Bit is cleared	x = Bit is unknown

bit 31-17 **Unimplemented:** Write ‘0’; ignore read

bit 16 **CHECOH:** Cache Coherency Setting on a PFM Program Cycle bit
1 = Invalidate all data and instruction lines
0 = Invalidate all data lnes and instruction lines that are not locked

bit 15-10 **Unimplemented:** Write ‘0’; ignore read

bit 9-8 **DCSZ<1:0>:** Data Cache Size in Lines bits
Changing these bits causes all lines to be reinitialized to the “invalid” state.
11 = Enable data caching with a size of 4 lines
10 = Enable data caching with a size of 2 lines
01 = Enable data caching with a size of 1 line
00 = Disable data caching

bit 7-6 **Unimplemented:** Write ‘0’; ignore read

bit 5-4 **PREFEN<1:0>:** Predictive Prefetch Enable bits
11 = Enable predictive prefetch for both cacheable and non-cacheable regions
10 = Enable predictive prefetch only for non-cacheable regions
01 = Enable predictive prefetch only for cacheable regions
00 = Disable predictive prefetch

bit 3 **Unimplemented:** Write ‘0’; ignore read

bit 2-0 **PFMWS<2:0>:** PFM Access Time Defined in Terms of SYSLK Wait States bits
111 = Seven Wait states
110 = Six Wait states
101 = Five Wait states
100 = Four Wait states
011 = Three Wait states
010 = Two Wait states
001 = One Wait state
000 = Zero Wait state

© 2009-2013 Microchip Technology Inc.

REGISTER 9-2: CHEACC: CACHE ACCESS REGISTER

Bit Range	Bit 31/23/15/7	Bit 30/22/14/6	Bit 29/21/13/5	Bit 28/20/12/4	Bit 27/19/11/3	Bit 26/18/10/2	Bit 25/17/9/1	Bit 24/16/8/0
31:24	R/W-0	U-0	U-0	U-0	U-0	U-0	U-0	U-0
	CHEWEN	—	—	—	—	—	—	—
23:16	U-0	U-0	U-0	U-0	U-0	U-0	U-0	U-0
	—	—	—	—	—	—	—	—
15:8	U-0	U-0	U-0	U-0	U-0	U-0	U-0	U-0
	—	—	—	—	—	—	—	—
7:0	U-0	U-0	U-0	U-0	R/W-0	R/W-0	R/W-0	R/W-0
	—	—	—	—	CHEIDX<3:0>			

Legend:			
R = Readable bit	W = Writable bit	U = Unimplemented bit, read as ‘0’	
-n = Value at POR	‘1’ = Bit is set	‘0’ = Bit is cleared	x = Bit is unknown

bit 31 **CHEWEN:** Cache Access Enable bits
These bits apply to registers CHETAG, CHEMSK, CHEW0, CHEW1, CHEW2, and CHEW3.
`1` = The cache line selected by CHEIDX<3:0> is writeable
`0` = The cache line selected by CHEIDX<3:0> is not writeable

bit 30-4 **Unimplemented:** Write ‘`0`’; ignore read

bit 3-0 **CHEIDX<3:0>:** Cache Line Index bits
The value selects the cache line for reading or writing.

REGISTER 9-3: CHETAG: CACHE TAG REGISTER

Bit Range	Bit 31/23/15/7	Bit 30/22/14/6	Bit 29/21/13/5	Bit 28/20/12/4	Bit 27/19/11/3	Bit 26/18/10/2	Bit 25/17/9/1	Bit 24/16/8/0
31:24	R/W-0	U-0	U-0	U-0	U-0	U-0	U-0	U-0
	LTAGBOOT	—	—	—	—	—	—	—
23:16	R/W-x	R/W-x	R/W-x	R/W-x	R/W-x	R/W-x	R/W-x	R/W-x
	LTAG<19:12>							
15:8	R/W-x	R/W-x	R/W-x	R/W-x	R/W-x	R/W-x	R/W-x	R/W-x
	LTAG<11:4>							
7:0	R/W-x	R/W-x	R/W-x	R/W-x	R/W-0	R/W-0	R/W-1	U-0
	LTAG<3:0>				LVALID	LLOCK	LTYPE	—

Legend:			
R = Readable bit	W = Writable bit	U = Unimplemented bit, read as ‘0’	
-n = Value at POR	‘1’ = Bit is set	‘0’ = Bit is cleared	x = Bit is unknown

bit 31 **LTAGBOOT:** Line Tag Address Boot bit
`1` = The line is in the 0x1D000000 (physical) area of memory
`0` = The line is in the 0x1FC00000 (physical) area of memory

bit 30-24 **Unimplemented:** Write ‘`0`’; ignore read

bit 23-4 **LTAG<19:0>:** Line Tag Address bits
LTAG<19:0> bits are compared against physical address to determine a hit. Because its address range and position of PFM in kernel space and user space, the LTAG PFM address is identical for virtual addresses, (system) physical addresses, and PFM physical addresses.

bit 3 **LVALID:** Line Valid bit
`1` = The line is valid and is compared to the physical address for hit detection
`0` = The line is not valid and is not compared to the physical address for hit detection

bit 2 **LLOCK:** Line Lock bit
`1` = The line is locked and will not be replaced
`0` = The line is not locked and can be replaced

bit 1 **LTYPE:** Line Type bit
`1` = The line caches instruction words
`0` = The line caches data words

bit 0 **Unimplemented:** Write ‘`0`’; ignore read

© 2009-2013 Microchip Technology Inc.

REGISTER 9-4: CHEMSK: CACHE TAG MASK REGISTER

Bit Range	Bit 31/23/15/7	Bit 30/22/14/6	Bit 29/21/13/5	Bit 28/20/12/4	Bit 27/19/11/3	Bit 26/18/10/2	Bit 25/17/9/1	Bit 24/16/8/0
31:24	U-0	U-0	U-0	U-0	U-0	U-0	U-0	U-0
	—	—	—	—	—	—	—	—
23:16	U-0	U-0	U-0	U-0	U-0	U-0	U-0	U-0
	—	—	—	—	—	—	—	—
15:8	R/W-0	R/W-0	R/W-0	R/W-0	R/W-0	R/W-0	R/W-0	R/W-0
	LMASK<10:3>							
7:0	R/W-0	R/W-0	R/W-0	U-0	U-0	U-0	U-0	U-0
	LMASK<2:0>			—	—	—	—	—

Legend:			
R = Readable bit	W = Writable bit	U = Unimplemented bit, read as ‘0’	
-n = Value at POR	‘1’ = Bit is set	‘0’ = Bit is cleared	x = Bit is unknown

bit 31-16 **Unimplemented:** Write ‘0’; ignore read

bit 15-5 **LMASK<10:0>:** Line Mask bits

1 = Enables mask logic to force a match on the corresponding bit position in LTAG<19:0> bits (CHETAG<23:4>) and the physical address

0 = Only writeable for values of CHEIDX<3:0> bits (CHEACC<3:0>) equal to 0x0A and 0x0B (disables mask logic)

bit 4-0 **Unimplemented:** Write ‘0’; ignore read

REGISTER 9-5: CHEW0: CACHE WORD 0

Bit Range	Bit 31/23/15/7	Bit 30/22/14/6	Bit 29/21/13/5	Bit 28/20/12/4	Bit 27/19/11/3	Bit 26/18/10/2	Bit 25/17/9/1	Bit 24/16/8/0
31:24	R/W-x	R/W-x	R/W-x	R/W-x	R/W-x	R/W-x	R/W-x	R/W-x
	CHEW0<31:24>							
23:16	R/W-x	R/W-x	R/W-x	R/W-x	R/W-x	R/W-x	R/W-x	R/W-x
	CHEW0<23:16>							
15:8	R/W-x	R/W-x	R/W-x	R/W-x	R/W-x	R/W-x	R/W-x	R/W-x
	CHEW0<15:8>							
7:0	R/W-x	R/W-x	R/W-x	R/W-x	R/W-x	R/W-x	R/W-x	R/W-x
	CHEW0<7:0>							

Legend:			
R = Readable bit	W = Writable bit	U = Unimplemented bit, read as ‘0’	
-n = Value at POR	‘1’ = Bit is set	‘0’ = Bit is cleared	x = Bit is unknown

bit 31-0 **CHEW0<31:0>:** Word 0 of the cache line selected by CHEIDX<3:0> bits (CHEACC<3:0>)
Readable only if the device is not code-protected.

REGISTER 9-6: CHEW1: CACHE WORD 1

Bit Range	Bit 31/23/15/7	Bit 30/22/14/6	Bit 29/21/13/5	Bit 28/20/12/4	Bit 27/19/11/3	Bit 26/18/10/2	Bit 25/17/9/1	Bit 24/16/8/0
31:24	R/W-x	R/W-x	R/W-x	R/W-x	R/W-x	R/W-x	R/W-x	R/W-x
	CHEW1<31:24>							
23:16	R/W-x	R/W-x	R/W-x	R/W-x	R/W-x	R/W-x	R/W-x	R/W-x
	CHEW1<23:16>							
15:8	R/W-x	R/W-x	R/W-x	R/W-x	R/W-x	R/W-x	R/W-x	R/W-x
	CHEW1<15:8>							
7:0	R/W-x	R/W-x	R/W-x	R/W-x	R/W-x	R/W-x	R/W-x	R/W-x
	CHEW1<7:0>							

Legend:			
R = Readable bit	W = Writable bit	U = Unimplemented bit, read as ‘0’	
-n = Value at POR	‘1’ = Bit is set	‘0’ = Bit is cleared	x = Bit is unknown

bit 31-0 **CHEW1<31:0>:** Word 1 of the cache line selected by CHEIDX<3:0> bits (CHEACC<3:0>)
Readable only if the device is not code-protected.

REGISTER 9-7: CHEW2: CACHE WORD 2

Bit Range	Bit 31/23/15/7	Bit 30/22/14/6	Bit 29/21/13/5	Bit 28/20/12/4	Bit 27/19/11/3	Bit 26/18/10/2	Bit 25/17/9/1	Bit 24/16/8/0
31:24	R/W-x	R/W-x	R/W-x	R/W-x	R/W-x	R/W-x	R/W-x	R/W-x
	CHEW2<31:24>							
23:16	R/W-x	R/W-x	R/W-x	R/W-x	R/W-x	R/W-x	R/W-x	R/W-x
	CHEW2<23:16>							
15:8	R/W-x	R/W-x	R/W-x	R/W-x	R/W-x	R/W-x	R/W-x	R/W-x
	CHEW2<15:8>							
7:0	R/W-x	R/W-x	R/W-x	R/W-x	R/W-x	R/W-x	R/W-x	R/W-x
	CHEW2<7:0>							

Legend:			
R = Readable bit	W = Writable bit	U = Unimplemented bit, read as ‘0’	
-n = Value at POR	‘1’ = Bit is set	‘0’ = Bit is cleared	x = Bit is unknown

bit 31-0 **CHEW2<31:0>:** Word 2 of the cache line selected by CHEIDX<3:0> bits (CHEACC<3:0>)
Readable only if the device is not code-protected.

© 2009-2013 Microchip Technology Inc.

REGISTER 9-8: CHEW3: CACHE WORD 3

Bit Range	Bit 31/23/15/7	Bit 30/22/14/6	Bit 29/21/13/5	Bit 28/20/12/4	Bit 27/19/11/3	Bit 26/18/10/2	Bit 25/17/9/1	Bit 24/16/8/0
31:24	R/W-x	R/W-x	R/W-x	R/W-x	R/W-x	R/W-x	R/W-x	R/W-x
	CHEW3<31:24>							
23:16	R/W-x	R/W-x	R/W-x	R/W-x	R/W-x	R/W-x	R/W-x	R/W-x
	CHEW3<23:16>							
15:8	R/W-x	R/W-x	R/W-x	R/W-x	R/W-x	R/W-x	R/W-x	R/W-x
	CHEW3<15:8>							
7:0	R/W-x	R/W-x	R/W-x	R/W-x	R/W-x	R/W-x	R/W-x	R/W-x
	CHEW3<7:0>							

Legend:			
R = Readable bit	W = Writable bit	U = Unimplemented bit, read as ‘0’	
-n = Value at POR	‘1’ = Bit is set	‘0’ = Bit is cleared	x = Bit is unknown

bit 31-0 **CHEW3<31:0>:** Word 3 of the cache line selected by CHEIDX<3:0> bits (CHEACC<3:0>)
Readable only if the device is not code-protected.

Note: This register is a window into the cache data array and is only readable if the device is not code-protected.

REGISTER 9-9: CHELRU: CACHE LRU REGISTER

Bit Range	Bit 31/23/15/7	Bit 30/22/14/6	Bit 29/21/13/5	Bit 28/20/12/4	Bit 27/19/11/3	Bit 26/18/10/2	Bit 25/17/9/1	Bit 24/16/8/0
31:24	U-0	U-0	U-0	U-0	U-0	U-0	U-0	R-0
	—	—	—	—	—	—	—	CHELRU<24>
23:16	R-0	R-0	R-0	R-0	R-0	R-0	R-0	R-0
	CHELRU<23:16>							
15:8	R-0	R-0	R-0	R-0	R-0	R-0	R-0	R-0
	CHELRU<15:8>							
7:0	R-0	R-0	R-0	R-0	R-0	R-0	R-0	R-0
	CHELRU<7:0>							

Legend:			
R = Readable bit	W = Writable bit	U = Unimplemented bit, read as ‘0’	
-n = Value at POR	‘1’ = Bit is set	‘0’ = Bit is cleared	x = Bit is unknown

bit 31-25 **Unimplemented:** Write ‘0’; ignore read

bit 24-0 **CHELRU<24:0>:** Cache Least Recently Used State Encoding bits
Indicates the pseudo-LRU state of the cache.

REGISTER 9-10: CHEHIT: CACHE HIT STATISTICS REGISTER

Bit Range	Bit 31/23/15/7	Bit 30/22/14/6	Bit 29/21/13/5	Bit 28/20/12/4	Bit 27/19/11/3	Bit 26/18/10/2	Bit 25/17/9/1	Bit 24/16/8/0
31:24	R/W-x	R/W-x	R/W-x	R/W-x	R/W-x	R/W-x	R/W-x	R/W-x
	CHEHIT<31:24>							
23:16	R/W-x	R/W-x	R/W-x	R/W-x	R/W-x	R/W-x	R/W-x	R/W-x
	CHEHIT<23:16>							
15:8	R/W-x	R/W-x	R/W-x	R/W-x	R/W-x	R/W-x	R/W-x	R/W-x
	CHEHIT<15:8>							
7:0	R/W-x	R/W-x	R/W-x	R/W-x	R/W-x	R/W-x	R/W-x	R/W-x
	CHEHIT<7:0>							

Legend:			
R = Readable bit	W = Writable bit	U = Unimplemented bit, read as ‘0’	
-n = Value at POR	‘1’ = Bit is set	‘0’ = Bit is cleared	x = Bit is unknown

bit 31-0 **CHEHIT<31:0>:** Cache Hit Count bits

Incremented each time the processor issues an instruction fetch or load that hits the prefetch cache from a cacheable region. Non-cacheable accesses do not modify this value.

REGISTER 9-11: CHEMIS: CACHE MISS STATISTICS REGISTER

Bit Range	Bit 31/23/15/7	Bit 30/22/14/6	Bit 29/21/13/5	Bit 28/20/12/4	Bit 27/19/11/3	Bit 26/18/10/2	Bit 25/17/9/1	Bit 24/16/8/0
31:24	R/W-x	R/W-x	R/W-x	R/W-x	R/W-x	R/W-x	R/W-x	R/W-x
	CHEMIS<31:24>							
23:16	R/W-x	R/W-x	R/W-x	R/W-x	R/W-x	R/W-x	R/W-x	R/W-x
	CHEMIS<23:16>							
15:8	R/W-x	R/W-x	R/W-x	R/W-x	R/W-x	R/W-x	R/W-x	R/W-x
	CHEMIS<15:8>							
7:0	R/W-x	R/W-x	R/W-x	R/W-x	R/W-x	R/W-x	R/W-x	R/W-x
	CHEMIS<7:0>							

Legend:			
R = Readable bit	W = Writable bit	U = Unimplemented bit, read as ‘0’	
-n = Value at POR	‘1’ = Bit is set	‘0’ = Bit is cleared	x = Bit is unknown

bit 31-0 **CHEMIS<31:0>:** Cache Miss Count bits

Incremented each time the processor issues an instruction fetch from a cacheable region that misses the prefetch cache. Non-cacheable accesses do not modify this value.

© 2009-2013 Microchip Technology Inc.

REGISTER 9-12: CHEPFABT: PREFETCH CACHE ABORT STATISTICS REGISTER

Bit Range	Bit 31/23/15/7	Bit 30/22/14/6	Bit 29/21/13/5	Bit 28/20/12/4	Bit 27/19/11/3	Bit 26/18/10/2	Bit 25/17/9/1	Bit 24/16/8/0
31:24	R/W-x	R/W-x	R/W-x	R/W-x	R/W-x	R/W-x	R/W-x	R/W-x
	CHEPFABT<31:24>							
23:16	R/W-x	R/W-x	R/W-x	R/W-x	R/W-x	R/W-x	R/W-x	R/W-x
	CHEPFABT<23:16>							
15:8	R/W-x	R/W-x	R/W-x	R/W-x	R/W-x	R/W-x	R/W-x	R/W-x
	CHEPFABT<15:8>							
7:0	R/W-x	R/W-x	R/W-x	R/W-x	R/W-x	R/W-x	R/W-x	R/W-x
	CHEPFABT<7:0>							

Legend:			
R = Readable bit	W = Writable bit	U = Unimplemented bit, read as ‘0’	
-n = Value at POR	‘1’ = Bit is set	‘0’ = Bit is cleared	x = Bit is unknown

bit 31-0 **CHEPFABT<31:0>:** Prefab Abort Count bits

Incremented each time an automatic prefetch cache is aborted due to a non-sequential instruction fetch, load or store.

NOTES:

© 2009-2013 Microchip Technology Inc.

10.0 DIRECT MEMORY ACCESS (DMA) CONTROLLER

Note 1: This data sheet summarizes the features of the PIC32MX5XX/6XX/7XX family of devices. It is not intended to be a comprehensive reference source. To complement the information in this data sheet, refer to **Section 31. "Direct Memory Access (DMA) Controller"** (DS60001117) in the *"PIC32 Family Reference Manual"*, which is available from the Microchip web site (www.microchip.com/PIC32).

2: Some registers and associated bits described in this section may not be available on all devices. Refer to **Section 4.0 "Memory Organization"** in this data sheet for device-specific register and bit information.

The Direct Memory Access (DMA) controller is a bus master module useful for data transfers between different devices without CPU intervention. The source and destination of a DMA transfer can be any of the memory mapped modules existent in the PIC32 (such as SPI, UART, PMP, etc.) or memory itself.

Following are some of the key features of the DMA controller module:

- Four identical channels, each featuring:
  - Auto-increment source and destination address registers
  - Source and destination pointers
  - Memory to memory and memory to peripheral transfers
- Automatic word-size detection:
  - Transfer granularity, down to byte level
  - Bytes need not be word-aligned at source and destination
- Fixed priority channel arbitration
- Flexible DMA channel operating modes:
  - Manual (software) or automatic (interrupt) DMA requests
  - One-Shot or Auto-Repeat Block Transfer modes
  - Channel-to-channel chaining
- Flexible DMA requests:
  - A DMA request can be selected from any of the peripheral interrupt sources
  - Each channel can select any (appropriate) observable interrupt as its DMA request source
  - A DMA transfer abort can be selected from any of the peripheral interrupt sources
  - Pattern (data) match transfer termination
- Multiple DMA channel status interrupts:
  - DMA channel block transfer complete
  - Source empty or half empty
  - Destination full or half full
  - DMA transfer aborted due to an external event
  - Invalid DMA address generated
- DMA debug support features:
  - Most recent address accessed by a DMA channel
  - Most recent DMA channel to transfer data
- CRC Generation module:
  - CRC module can be assigned to any of the available channels
  - CRC module is highly configurable

FIGURE 10-1: DMA BLOCK DIAGRAM

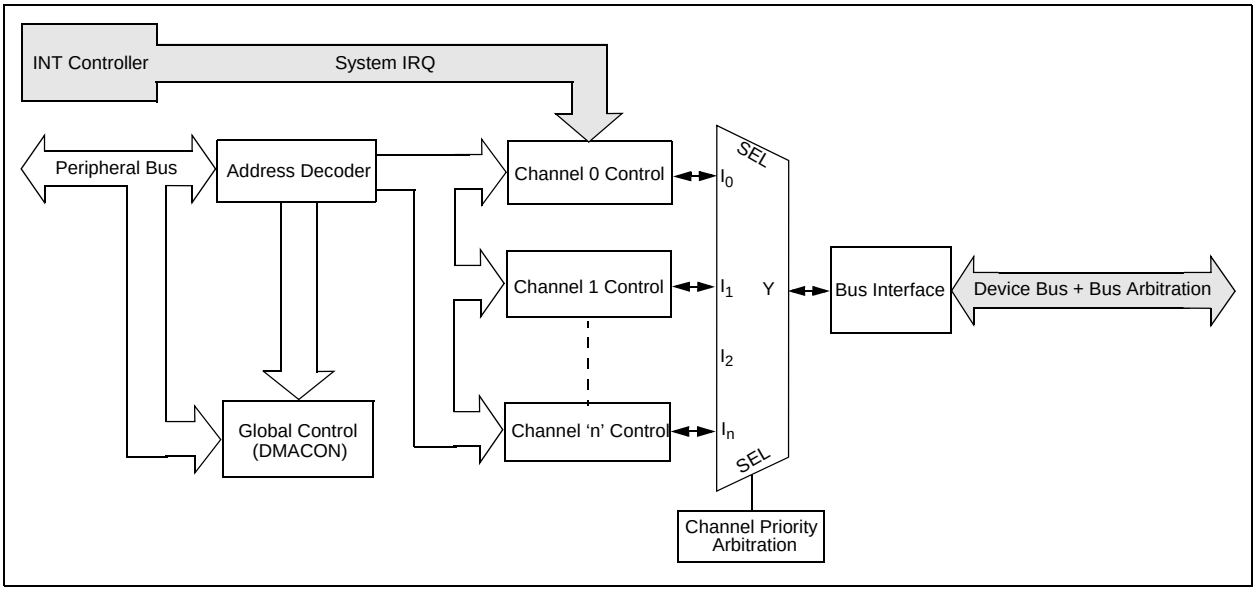

10.1 Control Registers

REGISTER 10-1: DMACON: DMA CONTROLLER CONTROL REGISTER

Bit Range	Bit 31/23/15/7	Bit 30/22/14/6	Bit 29/21/13/5	Bit 28/20/12/4	Bit 27/19/11/3	Bit 26/18/10/2	Bit 25/17/9/1	Bit 24/16/8/0
31:24	U-0	U-0	U-0	U-0	U-0	U-0	U-0	U-0
	—	—	—	—	—	—	—	—
23:16	U-0	U-0	U-0	U-0	U-0	U-0	U-0	U-0
	—	—	—	—	—	—	—	—
15:8	R/W-0	U-0	U-0	R/W-0	R/W-0	U-0	U-0	U-0
	ON(1)	—	—	SUSPEND	DMABUSY	—	—	—
7:0	U-0	U-0	U-0	U-0	U-0	U-0	U-0	U-0
	—	—	—	—	—	—	—	—

Legend:			
R = Readable bit	W = Writable bit	U = Unimplemented bit, read as ‘0’	
-n = Value at POR	‘1’ = Bit is set	‘0’ = Bit is cleared	x = Bit is unknown

bit 31-16 **Unimplemented:** Read as ‘0’

bit 15 **ON:** DMA On bit(1)
- 1 = DMA module is enabled
- 0 = DMA module is disabled

bit 14-13 **Unimplemented:** Read as ‘0’

bit 12 **SUSPEND:** DMA Suspend bit
- 1 = DMA transfers are suspended to allow CPU uninterrupted access to data bus
- 0 = DMA operates normally

bit 11 **DMABUSY:** DMA Module Busy bit
- 1 = DMA module is active
- 0 = DMA module is disabled and not actively transferring data

bit 10-0 **Unimplemented:** Read as ‘0’

Note 1: When using the 1:1 PBCLK divisor, the user’s software should not read/write the peripheral’s SFRs in the SYSCLK cycle immediately following the instruction that clears the module’s ON bit.

© 2009-2013 Microchip Technology Inc.

REGISTER 10-2: DMASTAT: DMA STATUS REGISTER

Bit Range	Bit 31/23/15/7	Bit 30/22/14/6	Bit 29/21/13/5	Bit 28/20/12/4	Bit 27/19/11/3	Bit 26/18/10/2	Bit 25/17/9/1	Bit 24/16/8/0
31:24	U-0	U-0	U-0	U-0	U-0	U-0	U-0	U-0
	—	—	—	—	—	—	—	—
23:16	U-0	U-0	U-0	U-0	U-0	U-0	U-0	U-0
	—	—	—	—	—	—	—	—
15:8	U-0	U-0	U-0	U-0	U-0	U-0	U-0	U-0
	—	—	—	—	—	—	—	—
7:0	U-0	U-0	U-0	U-0	R-0	R-0	R-0	R-0
	—	—	—	—	RDWR	DMACH<2:0>		

Legend:			
R = Readable bit	W = Writable bit	U = Unimplemented bit, read as ‘0’	
-n = Value at POR	‘1’ = Bit is set	‘0’ = Bit is cleared	x = Bit is unknown

bit 31-4 **Unimplemented:** Read as ‘0’

bit 3 **RDWR:** Read/Write Status bit

1 = Last DMA bus access was a read
0 = Last DMA bus access was a write

bit 2-0 **DMACH<2:0>:** DMA Channel bits

These bits contain the value of the most recent active DMA channel.

REGISTER 10-3: DMAADDR: DMA ADDRESS REGISTER

Bit Range	Bit 31/23/15/7	Bit 30/22/14/6	Bit 29/21/13/5	Bit 28/20/12/4	Bit 27/19/11/3	Bit 26/18/10/2	Bit 25/17/9/1	Bit 24/16/8/0
31:24	R-0	R-0	R-0	R-0	R-0	R-0	R-0	R-0
	DMAADDR<31:24>							
23:16	R-0	R-0	R-0	R-0	R-0	R-0	R-0	R-0
	DMAADDR<23:16>							
15:8	R-0	R-0	R-0	R-0	R-0	R-0	R-0	R-0
	DMAADDR<15:8>							
7:0	R-0	R-0	R-0	R-0	R-0	R-0	R-0	R-0
	DMAADDR<7:0>							

Legend:			
R = Readable bit	W = Writable bit	U = Unimplemented bit, read as ‘0’	
-n = Value at POR	‘1’ = Bit is set	‘0’ = Bit is cleared	x = Bit is unknown

bit 31-0 **DMAADDR<31:0>:** DMA Module Address bits

These bits contain the address of the most recent DMA access.

REGISTER 10-4: DCRCCON: DMA CRC CONTROL REGISTER

Bit Range	Bit 31/23/15/7	Bit 30/22/14/6	Bit 29/21/13/5	Bit 28/20/12/4	Bit 27/19/11/3	Bit 26/18/10/2	Bit 25/17/9/1	Bit 24/16/8/0
31:24	U-0	U-0	R/W-0	R/W-0	R/W-0	U-0	U-0	R/W-0
	—	—	BYTO<1:0>		WBO(1)	—	—	BITO
23:16	U-0	U-0	U-0	U-0	U-0	U-0	U-0	U-0
	—	—	—	—	—	—	—	—
15:8	U-0	U-0	U-0	R/W-0	R/W-0	R/W-0	R/W-0	R/W-0
	—	—	—	PLEN<4:0>				
7:0	R/W-0	R/W-0	R/W-0	U-0	U-0	R/W-0	R/W-0	R/W-0
	CRCEN	CRCAPP(1)	CRCTYP	—	—	CRCCH<2:0>		

Legend:			
R = Readable bit	W = Writable bit	U = Unimplemented bit, read as ‘0’	
-n = Value at POR	‘1’ = Bit is set	‘0’ = Bit is cleared	x = Bit is unknown

bit 31-30 **Unimplemented:** Read as ‘0’

bit 29-28 **BYTO<1:0>:** CRC Byte Order Selection bits
- 11 = Endian byte swap on half-word boundaries (source half-word order with reverse source byte order per half-word)
- 10 = Swap half-words on word boundaries (reverse source half-word order with source byte order per half-word)
- 01 = Endian byte swap on word boundaries (reverse source byte order)
- 00 = No swapping (source byte order)

bit 27 **WBO:** CRC Write Byte Order Selection bit(1)
- 1 = Source data is written to the destination re-ordered as defined by BYTO<1:0>
- 0 = Source data is written to the destination unaltered

bit 26-25 **Unimplemented:** Read as ‘0’

bit 24 **BITO:** CRC Bit Order Selection bit

When CRCTYP (DCRCCON<15>) = 1 (CRC module is in IP Header mode):
- 1 = The IP header checksum is calculated Least Significant bit (LSb) first (reflected)
- 0 = The IP header checksum is calculated Most Significant bit (MSb) first (not reflected)

When CRCTYP (DCRCCON<15>) = 0 (CRC module is in LFSR mode):
- 1 = The LFSR CRC is calculated Least Significant bit first (reflected)
- 0 = The LFSR CRC is calculated Most Significant bit first (not reflected)

bit 23-13 **Unimplemented:** Read as ‘0’

bit 12-8 **PLEN<4:0>:** Polynomial Length bits(1)

When CRCTYP (DCRCCON<15>) = 1 (CRC module is in IP Header mode):
These bits are unused.

When CRCTYP (DCRCCON<15>) = 0 (CRC module is in LFSR mode):
Denotes the length of the polynomial – 1.

bit 7 **CRCEN:** CRC Enable bit
- 1 = CRC module is enabled and channel transfers are routed through the CRC module
- 0 = CRC module is disabled and channel transfers proceed normally

Note 1: When WBO = 1, unaligned transfers are not supported and the CRCAPP bit cannot be set.

© 2009-2013 Microchip Technology Inc.

REGISTER 10-4: DCRCCON: DMA CRC CONTROL REGISTER (CONTINUED)

bit 6 **CRCAPP:** CRC Append Mode bit[(1)]

1 = The DMA transfers data from the source into the CRC but not to the destination. When a block transfer completes the DMA writes the calculated CRC value to the location given by CHxDSA

0 = The DMA transfers data from the source through the CRC obeying WBO as it writes the data to the destination

bit 5 **CRCTYP:** CRC Type Selection bit

1 = The CRC module will calculate an IP header checksum

0 = The CRC module will calculate a LFSR CRC

bit 4-3 **Unimplemented:** Read as '0'

bit 2-0 **CRCCH<2:0>:** CRC Channel Select bits

111 = CRC is assigned to Channel 7
110 = CRC is assigned to Channel 6
101 = CRC is assigned to Channel 5
100 = CRC is assigned to Channel 4
011 = CRC is assigned to Channel 3
010 = CRC is assigned to Channel 2
001 = CRC is assigned to Channel 1
000 = CRC is assigned to Channel 0

Note 1: When WBO = 1, unaligned transfers are not supported and the CRCAPP bit cannot be set.

REGISTER 10-5: DCRCDATA: DMA CRC DATA REGISTER

Bit Range	Bit 31/23/15/7	Bit 30/22/14/6	Bit 29/21/13/5	Bit 28/20/12/4	Bit 27/19/11/3	Bit 26/18/10/2	Bit 25/17/9/1	Bit 24/16/8/0
31:24	R/W-0	R/W-0	R/W-0	R/W-0	R/W-0	R/W-0	R/W-0	R/W-0
	DCRCDATA<31:24>							
23:16	R/W-0	R/W-0	R/W-0	R/W-0	R/W-0	R/W-0	R/W-0	R/W-0
	DCRCDATA<23:16>							
15:8	R/W-0	R/W-0	R/W-0	R/W-0	R/W-0	R/W-0	R/W-0	R/W-0
	DCRCDATA<15:8>							
7:0	R/W-0	R/W-0	R/W-0	R/W-0	R/W-0	R/W-0	R/W-0	R/W-0
	DCRCDATA<7:0>							

Legend:			
R = Readable bit	W = Writable bit	U = Unimplemented bit, read as ‘0’	
-n = Value at POR	‘1’ = Bit is set	‘0’ = Bit is cleared	x = Bit is unknown

bit 31-0 **DCRCDATA<31:0>:** CRC Data Register bits

Writing to this register will seed the CRC generator. Reading from this register will return the current value of the CRC. Bits greater than PLEN will return ‘0’ on any read.

When CRCTYP (DCRCCON<15>) = 1 (CRC module is in IP Header mode):
Only the lower 16 bits contain IP header checksum information. The upper 16 bits are always ‘0’. Data written to this register is converted and read back in 1’s complement form (current IP header checksum value).

When CRCTYP (DCRCCON<15>) = 0 (CRC module is in LFSR mode):
Bits greater than PLEN will return ‘0’ on any read.

REGISTER 10-6: DCRCXOR: DMA CRCXOR ENABLE REGISTER

Bit Range	Bit 31/23/15/7	Bit 30/22/14/6	Bit 29/21/13/5	Bit 28/20/12/4	Bit 27/19/11/3	Bit 26/18/10/2	Bit 25/17/9/1	Bit 24/16/8/0
31:24	R/W-0	R/W-0	R/W-0	R/W-0	R/W-0	R/W-0	R/W-0	R/W-0
	DCRCXOR<31:24>							
23:16	R/W-0	R/W-0	R/W-0	R/W-0	R/W-0	R/W-0	R/W-0	R/W-0
	DCRCXOR<23:16>							
15:8	R/W-0	R/W-0	R/W-0	R/W-0	R/W-0	R/W-0	R/W-0	R/W-0
	DCRCXOR<15:8>							
7:0	R/W-0	R/W-0	R/W-0	R/W-0	R/W-0	R/W-0	R/W-0	R/W-0
	DCRCXOR<7:0>							

Legend:			
R = Readable bit	W = Writable bit	U = Unimplemented bit, read as ‘0’	
-n = Value at POR	‘1’ = Bit is set	‘0’ = Bit is cleared	x = Bit is unknown

bit 31-0 **DCRCXOR<31:0>:** CRC XOR Register bits

When CRCTYP (DCRCCON<15>) = 1 (CRC module is in IP Header mode):
This register is unused.

When CRCTYP (DCRCCON<15>) = 0 (CRC module is in LFSR mode):
1 = Enable the XOR input to the Shift register
0 = Disable the XOR input to the Shift register; data is shifted in directly from the previous stage in the register

© 2009-2013 Microchip Technology Inc.

REGISTER 10-7: DCHxCON: DMA CHANNEL 'x' CONTROL REGISTER

Bit Range	Bit 31/23/15/7	Bit 30/22/14/6	Bit 29/21/13/5	Bit 28/20/12/4	Bit 27/19/11/3	Bit 26/18/10/2	Bit 25/17/9/1	Bit 24/16/8/0
31:24	U-0	U-0	U-0	U-0	U-0	U-0	U-0	U-0
	—	—	—	—	—	—	—	—
23:16	U-0	U-0	U-0	U-0	U-0	U-0	U-0	U-0
	—	—	—	—	—	—	—	—
15:8	R/W-0	U-0	U-0	U-0	U-0	U-0	U-0	R/W-0
	CHBUSY	—	—	—	—	—	—	CHCHNS(1)
7:0	R/W-0	R/W-0	R/W-0	R/W-0	U-0	R-0	R/W-0	R/W-0
	CHEN(2)	CHAED	CHCHN	CHAEN	—	CHEDET	CHPRI<1:0>	

Legend:			
R = Readable bit	W = Writable bit	U = Unimplemented bit, read as '0'	
-n = Value at POR	'1' = Bit is set	'0' = Bit is cleared	x = Bit is unknown

bit 31-16 **Unimplemented:** Read as '0'

bit 15 **CHBUSY:** Channel Busy bit
1 = Channel is active or has been enabled
0 = Channel is inactive or has been disabled

bit 14-9 **Unimplemented:** Read as '0'

bit 8 **CHCHNS:** Chain Channel Selection bit(1)
1 = Chain to channel lower in natural priority (CH1 will be enabled by CH2 transfer complete)
0 = Chain to channel higher in natural priority (CH1 will be enabled by CH0 transfer complete)

bit 7 **CHEN:** Channel Enable bit(2)
1 = Channel is enabled
0 = Channel is disabled

bit 6 **CHAED:** Channel Allow Events If Disabled bit
1 = Channel start/abort events will be registered, even if the channel is disabled
0 = Channel start/abort events will be ignored if the channel is disabled

bit **CHCHN:** Channel Chain Enable bit
1 = Allow channel to be chained
0 = Do not allow channel to be chained

bit 4 **CHAEN:** Channel Automatic Enable bit
1 = Channel is continuously enabled, and not automatically disabled after a block transfer is complete
0 = Channel is disabled on block transfer complete

bit 3 **Unimplemented:** Read as '0'

bit 2 **CHEDET:** Channel Event Detected bit
1 = An event has been detected
0 = No events have been detected

bit 1-0 **CHPRI<1:0>:** Channel Priority bits
11 = Channel has priority 3 (highest)
10 = Channel has priority 2
01 = Channel has priority 1
00 = Channel has priority 0

Note 1: The chain selection bit takes effect when chaining is enabled (CHCHN = 1).

2: When the channel is suspended by clearing this bit, the user application should poll the CHBUSY bit (if available on the device variant) to see when the channel is suspended, as it may take some clock cycles to complete a current transaction before the channel is suspended.

REGISTER 10-8: DCHxECON: DMA CHANNEL 'x' EVENT CONTROL REGISTER

Bit Range	Bit 31/23/15/7	Bit 30/22/14/6	Bit 29/21/13/5	Bit 28/20/12/4	Bit 27/19/11/3	Bit 26/18/10/2	Bit 25/17/9/1	Bit 24/16/8/0
31:24	U-0	U-0	U-0	U-0	U-0	U-0	U-0	U-0
	—	—	—	—	—	—	—	—
23:16	R/W-1	R/W-1	R/W-1	R/W-1	R/W-1	R/W-1	R/W-1	R/W-1
	CHAIRQ<7:0>(1)							
15:8	R/W-1	R/W-1	R/W-1	R/W-1	R/W-1	R/W-1	R/W-1	R/W-1
	CHSIRQ<7:0>(1)							
7:0	S-0	S-0	R/W-0	R/W-0	R/W-0	U-0	U-0	U-0
	CFORCE	CABORT	PATEN	SIRQEN	AIRQEN	—	—	—

Legend:	S = Settable bit		
R = Readable bit	W = Writable bit	U = Unimplemented bit, read as '0'	
-n = Value at POR	'1' = Bit is set	'0' = Bit is cleared	x = Bit is unknown

bit 31-24 **Unimplemented:** Read as '0'

bit 23-16 **CHAIRQ<7:0>:** Channel Transfer Abort IRQ bits(1)

11111111 = Interrupt 255 will abort any transfers in progress and set CHAIF flag

•

•

•

00000001 = Interrupt 1 will abort any transfers in progress and set CHAIF flag

00000000 = Interrupt 0 will abort any transfers in progress and set CHAIF flag

bit 15-8 **CHSIRQ<7:0>:** Channel Transfer Start IRQ bits(1)

11111111 = Interrupt 255 will initiate a DMA transfer

•

•

•

00000001 = Interrupt 1 will initiate a DMA transfer

00000000 = Interrupt 0 will initiate a DMA transfer

bit 7 **CFORCE:** DMA Forced Transfer bit

1 = A DMA transfer is forced to begin when this bit is written to a '1'

0 = This bit always reads '0'

bit 6 **CABORT:** DMA Abort Transfer bit

1 = A DMA transfer is aborted when this bit is written to a '1'

0 = This bit always reads '0'

bit 5 **PATEN:** Channel Pattern Match Abort Enable bit

1 = Abort transfer and clear CHEN on pattern match

0 = Pattern match is disabled

bit 4 **SIRQEN:** Channel Start IRQ Enable bit

1 = Start channel cell transfer if an interrupt matching CHSIRQ occurs

0 = Interrupt number CHSIRQ is ignored and does not start a transfer

bit 3 **AIRQEN:** Channel Abort IRQ Enable bit

1 = Channel transfer is aborted if an interrupt matching CHAIRQ occurs

0 = Interrupt number CHAIRQ is ignored and does not terminate a transfer

bit 2-0 **Unimplemented:** Read as '0'

Note 1: See **Table 7-1: "Interrupt IRQ, Vector and Bit Location"** for the list of available interrupt IRQ sources.

© 2009-2013 Microchip Technology Inc.

REGISTER 10-9: DCHxINT: DMA CHANNEL 'x' INTERRUPT CONTROL REGISTER

Bit Range	Bit 31/23/15/7	Bit 30/22/14/6	Bit 29/21/13/5	Bit 28/20/12/4	Bit 27/19/11/3	Bit 26/18/10/2	Bit 25/17/9/1	Bit 24/16/8/0
31:24	U-0	U-0	U-0	U-0	U-0	U-0	U-0	U-0
	—	—	—	—	—	—	—	—
23:16	R/W-0	R/W-0	R/W-0	R/W-0	R/W-0	R/W-0	R/W-0	R/W-0
	CHSDIE	CHSHIE	CHDDIE	CHDHIE	CHBCIE	CHCCIE	CHTAIE	CHERIE
15:8	U-0	U-0	U-0	U-0	U-0	U-0	U-0	U-0
	—	—	—	—	—	—	—	—
7:0	R/W-0	R/W-0	R/W-0	R/W-0	R/W-0	R/W-0	R/W-0	R/W-0
	CHSDIF	CHSHIF	CHDDIF	CHDHIF	CHBCIF	CHCCIF	CHTAIF	CHERIF

Legend:			
R = Readable bit	W = Writable bit	U = Unimplemented bit, read as '0'	
-n = Value at POR	'1' = Bit is set	'0' = Bit is cleared	x = Bit is unknown

bit 31-24 **Unimplemented:** Read as '0'

bit 23 **CHSDIE:** Channel Source Done Interrupt Enable bit
1 = Interrupt is enabled
0 = Interrupt is disabled

bit 22 **CHSHIE:** Channel Source Half Empty Interrupt Enable bit
1 = Interrupt is enabled
0 = Interrupt is disabled

bit 21 **CHDDIE:** Channel Destination Done Interrupt Enable bit
1 = Interrupt is enabled
0 = Interrupt is disabled

bit 20 **CHDHIE:** Channel Destination Half Full Interrupt Enable bit
1 = Interrupt is enabled
0 = Interrupt is disabled

bit 19 **CHBCIE:** Channel Block Transfer Complete Interrupt Enable bit
1 = Interrupt is enabled
0 = Interrupt is disabled

bit 18 **CHCCIE:** Channel Cell Transfer Complete Interrupt Enable bit
1 = Interrupt is enabled
0 = Interrupt is disabled

bit 17 **CHTAIE:** Channel Transfer Abort Interrupt Enable bit
1 = Interrupt is enabled
0 = Interrupt is disabled

bit 16 **CHERIE:** Channel Address Error Interrupt Enable bit
1 = Interrupt is enabled
0 = Interrupt is disabled

bit 15-8 **Unimplemented:** Read as '0'

bit 7 **CHSDIF:** Channel Source Done Interrupt Flag bit
1 = Channel Source Pointer has reached end of source (CHSPTR = CHSSIZ)
0 = No interrupt is pending

bit 6 **CHSHIF:** Channel Source Half Empty Interrupt Flag bit
1 = Channel Source Pointer has reached midpoint of source (CHSPTR = CHSSIZ/2)
0 = No interrupt is pending

REGISTER 10-9: DCHxINT: DMA CHANNEL 'x' INTERRUPT CONTROL REGISTER (CONTINUED)

bit 5 **CHDDIF:** Channel Destination Done Interrupt Flag bit

1 = Channel Destination Pointer has reached end of destination (CHDPTR = CHDSIZ)
0 = No interrupt is pending

bit 4 **CHDHIF:** Channel Destination Half Full Interrupt Flag bit

1 = Channel Destination Pointer has reached midpoint of destination (CHDPTR = CHDSIZ/2)
0 = No interrupt is pending

bit 3 **CHBCIF:** Channel Block Transfer Complete Interrupt Flag bit

1 = A block transfer has been completed (the larger of CHSSIZ/CHDSIZ bytes has been transferred), or a pattern match event occurs
0 = No interrupt is pending

bit 2 **CHCCIF:** Channel Cell Transfer Complete Interrupt Flag bit

1 = A cell transfer has been completed (CHCSIZ bytes have been transferred)
0 = No interrupt is pending

bit 1 **CHTAIF:** Channel Transfer Abort Interrupt Flag bit

1 = An interrupt matching CHAIRQ has been detected and the DMA transfer has been aborted
0 = No interrupt is pending

bit 0 **CHERIF:** Channel Address Error Interrupt Flag bit

1 = A channel address error has been detected (either the source or the destination address is invalid)
0 = No interrupt is pending

© 2009-2013 Microchip Technology Inc.

REGISTER 10-10: DCHxSSA: DMA CHANNEL 'x' SOURCE START ADDRESS REGISTER

Bit Range	Bit 31/23/15/7	Bit 30/22/14/6	Bit 29/21/13/5	Bit 28/20/12/4	Bit 27/19/11/3	Bit 26/18/10/2	Bit 25/17/9/1	Bit 24/16/8/0
31:24	R/W-0	R/W-0	R/W-0	R/W-0	R/W-0	R/W-0	R/W-0	R/W-0
	CHSSA<31:24>							
23:16	R/W-0	R/W-0	R/W-0	R/W-0	R/W-0	R/W-0	R/W-0	R/W-0
	CHSSA<23:16>							
15:8	R/W-0	R/W-0	R/W-0	R/W-0	R/W-0	R/W-0	R/W-0	R/W-0
	CHSSA<15:8>							
7:0	R/W-0	R/W-0	R/W-0	R/W-0	R/W-0	R/W-0	R/W-0	R/W-0
	CHSSA<7:0>							

Legend:			
R = Readable bit	W = Writable bit	U = Unimplemented bit, read as '0'	
-n = Value at POR	'1' = Bit is set	'0' = Bit is cleared	x = Bit is unknown

bit 31-0 **CHSSA<31:0>** Channel Source Start Address bits
Channel source start address.

Note: This must be the physical address of the source.

REGISTER 10-11: DCHxDSA: DMA CHANNEL 'x' DESTINATION START ADDRESS REGISTER

Bit Range	Bit 31/23/15/7	Bit 30/22/14/6	Bit 29/21/13/5	Bit 28/20/12/4	Bit 27/19/11/3	Bit 26/18/10/2	Bit 25/17/9/1	Bit 24/16/8/0
31:24	R/W-0	R/W-0	R/W-0	R/W-0	R/W-0	R/W-0	R/W-0	R/W-0
	CHDSA<31:24>							
23:16	R/W-0	R/W-0	R/W-0	R/W-0	R/W-0	R/W-0	R/W-0	R/W-0
	CHDSA<23:16>							
15:8	R/W-0	R/W-0	R/W-0	R/W-0	R/W-0	R/W-0	R/W-0	R/W-0
	CHDSA<15:8>							
7:0	R/W-0	R/W-0	R/W-0	R/W-0	R/W-0	R/W-0	R/W-0	R/W-0
	CHDSA<7:0>							

Legend:			
R = Readable bit	W = Writable bit	U = Unimplemented bit, read as '0'	
-n = Value at POR	'1' = Bit is set	'0' = Bit is cleared	x = Bit is unknown

bit 31-0 **CHDSA<31:0>:** Channel Destination Start Address bits
Channel destination start address.

Note: This must be the physical address of the destination.

REGISTER 10-12: DCHxSSIZ: DMA CHANNEL ‘x’ SOURCE SIZE REGISTER

Bit Range	Bit 31/23/15/7	Bit 30/22/14/6	Bit 29/21/13/5	Bit 28/20/12/4	Bit 27/19/11/3	Bit 26/18/10/2	Bit 25/17/9/1	Bit 24/16/8/0
31:24	U-0	U-0	U-0	U-0	U-0	U-0	U-0	U-0
	—	—	—	—	—	—	—	—
23:16	U-0	U-0	U-0	U-0	U-0	U-0	U-0	U-0
	—	—	—	—	—	—	—	—
15:8	R/W-0	R/W-0	R/W-0	R/W-0	R/W-0	R/W-0	R/W-0	R/W-0
	CHSSIZ<15:8>							
7:0	R/W-0	R/W-0	R/W-0	R/W-0	R/W-0	R/W-0	R/W-0	R/W-0
	CHSSIZ<7:0>							

Legend:			
R = Readable bit	W = Writable bit	U = Unimplemented bit, read as ‘0’	
-n = Value at POR	‘1’ = Bit is set	‘0’ = Bit is cleared	x = Bit is unknown

bit 31-16 **Unimplemented:** Read as ‘0’

bit 15-0 **CHSSIZ<15:0>:** Channel Source Size bits

1111111111111111 = 65,535 byte source size

•

•

•

0000000000000010 = 2 byte source size

0000000000000001 = 1 byte source size

0000000000000000 = 65,536 byte source size

REGISTER 10-13: DCHxDSIZ: DMA CHANNEL ‘x’ DESTINATION SIZE REGISTER

Bit Range	Bit 31/23/15/7	Bit 30/22/14/6	Bit 29/21/13/5	Bit 28/20/12/4	Bit 27/19/11/3	Bit 26/18/10/2	Bit 25/17/9/1	Bit 24/16/8/0
31:24	U-0	U-0	U-0	U-0	U-0	U-0	U-0	U-0
	—	—	—	—	—	—	—	—
23:16	U-0	U-0	U-0	U-0	U-0	U-0	U-0	U-0
	—	—	—	—	—	—	—	—
15:8	R/W-0	R/W-0	R/W-0	R/W-0	R/W-0	R/W-0	R/W-0	R/W-0
	CHDSIZ<15:8>							
7:0	R/W-0	R/W-0	R/W-0	R/W-0	R/W-0	R/W-0	R/W-0	R/W-0
	CHDSIZ<7:0>							

Legend:			
R = Readable bit	W = Writable bit	U = Unimplemented bit, read as ‘0’	
-n = Value at POR	‘1’ = Bit is set	‘0’ = Bit is cleared	x = Bit is unknown

bit 31-16 **Unimplemented:** Read as ‘0’

bit 15-0 **CHDSIZ<15:0>:** Channel Destination Size bits

1111111111111111 = 65,535 byte destination size

•

•

•

0000000000000010 = 2 byte destination size

0000000000000001 = 1 byte destination size

0000000000000000 = 65,536 byte destination size

© 2009-2013 Microchip Technology Inc.

REGISTER 10-14: DCHxSPTR: DMA CHANNEL ‘x’ SOURCE POINTER REGISTER

Bit Range	Bit 31/23/15/7	Bit 30/22/14/6	Bit 29/21/13/5	Bit 28/20/12/4	Bit 27/19/11/3	Bit 26/18/10/2	Bit 25/17/9/1	Bit 24/16/8/0
31:24	U-0	U-0	U-0	U-0	U-0	U-0	U-0	U-0
	—	—	—	—	—	—	—	—
23:16	U-0	U-0	U-0	U-0	U-0	U-0	U-0	U-0
	—	—	—	—	—	—	—	—
15:8	R-0	R-0	R-0	R-0	R-0	R-0	R-0	R-0
	CHSPTR<15:8>							
7:0	R-0	R-0	R-0	R-0	R-0	R-0	R-0	R-0
	CHSPTR<7:0>							

Legend:			
R = Readable bit	W = Writable bit	U = Unimplemented bit, read as ‘0’	
-n = Value at POR	‘1’ = Bit is set	‘0’ = Bit is cleared	x = Bit is unknown

bit 31-16 **Unimplemented:** Read as ‘0’

bit 15-0 **CHSPTR<15:0>:** Channel Source Pointer bits

1111111111111111 = Points to byte 65,535 of the source

•

•

•

0000000000000001 = Points to byte 1 of the source

0000000000000000 = Points to byte 0 of the source

Note: When in Pattern Detect mode, this register is reset on a pattern detect.

REGISTER 10-15: DCHxDPTR: DMA CHANNEL ‘x’ DESTINATION POINTER REGISTER

Bit Range	Bit 31/23/15/7	Bit 30/22/14/6	Bit 29/21/13/5	Bit 28/20/12/4	Bit 27/19/11/3	Bit 26/18/10/2	Bit 25/17/9/1	Bit 24/16/8/0
31:24	U-0	U-0	U-0	U-0	U-0	U-0	U-0	U-0
	—	—	—	—	—	—	—	—
23:16	U-0	U-0	U-0	U-0	U-0	U-0	U-0	U-0
	—	—	—	—	—	—	—	—
15:8	R-0	R-0	R-0	R-0	R-0	R-0	R-0	R-0
	CHDPTR<15:8>							
7:0	R-0	R-0	R-0	R-0	R-0	R-0	R-0	R-0
	CHDPTR<7:0>							

Legend:			
R = Readable bit	W = Writable bit	U = Unimplemented bit, read as ‘0’	
-n = Value at POR	‘1’ = Bit is set	‘0’ = Bit is cleared	x = Bit is unknown

bit 31-16 **Unimplemented:** Read as ‘0’

bit 15-0 **CHDPTR<15:0>:** Channel Destination Pointer bits

1111111111111111 = Points to byte 65,535 of the destination

•

•

•

0000000000000001 = Points to byte 1 of the destination

0000000000000000 = Points to byte 0 of the destination

REGISTER 10-16: DCHxCSIZ: DMA CHANNEL 'x' CELL-SIZE REGISTER

Bit Range	Bit 31/23/15/7	Bit 30/22/14/6	Bit 29/21/13/5	Bit 28/20/12/4	Bit 27/19/11/3	Bit 26/18/10/2	Bit 25/17/9/1	Bit 24/16/8/0
31:24	U-0	U-0	U-0	U-0	U-0	U-0	U-0	U-0
	—	—	—	—	—	—	—	—
23:16	U-0	U-0	U-0	U-0	U-0	U-0	U-0	U-0
	—	—	—	—	—	—	—	—
15:8	R/W-0	R/W-0	R/W-0	R/W-0	R/W-0	R/W-0	R/W-0	R/W-0
	CHCSIZ<15:8>							
7:0	R/W-0	R/W-0	R/W-0	R/W-0	R/W-0	R/W-0	R/W-0	R/W-0
	CHCSIZ<7:0>							

Legend:			
R = Readable bit	W = Writable bit	U = Unimplemented bit, read as '0'	
-n = Value at POR	'1' = Bit is set	'0' = Bit is cleared	x = Bit is unknown

bit 31-16 **Unimplemented:** Read as '0'

bit 15-0 **CHCSIZ<15:0>:** Channel Cell-Size bits

1111111111111111 = 65,535 bytes transferred on an event
•
•
•
0000000000000010 = 2 bytes transferred on an event
0000000000000001 = 1 byte transferred on an event
0000000000000000 = 65,536 bytes transferred on an event

REGISTER 10-17: DCHxCPTR: DMA CHANNEL 'x' CELL POINTER REGISTER

Bit Range	Bit 31/23/15/7	Bit 30/22/14/6	Bit 29/21/13/5	Bit 28/20/12/4	Bit 27/19/11/3	Bit 26/18/10/2	Bit 25/17/9/1	Bit 24/16/8/0
31:24	U-0	U-0	U-0	U-0	U-0	U-0	U-0	U-0
	—	—	—	—	—	—	—	—
23:16	U-0	U-0	U-0	U-0	U-0	U-0	U-0	U-0
	—	—	—	—	—	—	—	—
15:8	R-0	R-0	R-0	R-0	R-0	R-0	R-0	R-0
	CHCPTR<15:8>							
7:0	R-0	R-0	R-0	R-0	R-0	R-0	R-0	R-0
	CHCPTR<7:0>							

Legend:			
R = Readable bit	W = Writable bit	U = Unimplemented bit, read as '0'	
-n = Value at POR	'1' = Bit is set	'0' = Bit is cleared	x = Bit is unknown

bit 31-16 **Unimplemented:** Read as '0'

bit 15-0 **CHCPTR<7:0>:** Channel Cell Progress Pointer bits

1111111111111111 = 65,535 bytes have been transferred since the last event
•
•
•
0000000000000001 = 1 byte has been transferred since the last event
0000000000000000 = 0 bytes have been transferred since the last event

Note: When in Pattern Detect mode, this register is reset on a pattern detect.

© 2009-2013 Microchip Technology Inc.

REGISTER 10-18: DCHxDAT: DMA CHANNEL 'x' PATTERN DATA REGISTER

Bit Range	Bit 31/23/15/7	Bit 30/22/14/6	Bit 29/21/13/5	Bit 28/20/12/4	Bit 27/19/11/3	Bit 26/18/10/2	Bit 25/17/9/1	Bit 24/16/8/0
31:24	U-0	U-0	U-0	U-0	U-0	U-0	U-0	U-0
	—	—	—	—	—	—	—	—
23:16	U-0	U-0	U-0	U-0	U-0	U-0	U-0	U-0
	—	—	—	—	—	—	—	—
15:8	U-0	U-0	U-0	U-0	U-0	U-0	U-0	U-0
	—	—	—	—	—	—	—	—
7:0	R/W-0	R/W-0	R/W-0	R/W-0	R/W-0	R/W-0	R/W-0	R/W-0
	CHPDAT<7:0>							

Legend:			
R = Readable bit	W = Writable bit	U = Unimplemented bit, read as '0'	
-n = Value at POR	'1' = Bit is set	'0' = Bit is cleared	x = Bit is unknown

bit 31-8 **Unimplemented:** Read as '0'

bit 7-0 **CHPDAT<7:0>:** Channel Data Register bits

Pattern Terminate mode:
Data to be matched must be stored in this register to allow terminate on match.

All other modes:
Unused.

NOTES:

© 2009-2013 Microchip Technology Inc.

11.0 USB ON-THE-GO (OTG)

Note 1: This data sheet summarizes the features of the PIC32MX5XX/6XX/7XX family of devices. It is not intended to be a comprehensive reference source. To complement the information in this data sheet, refer to **Section 27. "USB On-The-Go (OTG)"** (DS60001126) in the *"PIC32 Family Reference Manual"*, which is available from the Microchip web site (www.microchip.com/PIC32).

2: Some registers and associated bits described in this section may not be available on all devices. Refer to **Section 4.0 "Memory Organization"** in this data sheet for device-specific register and bit information.

The Universal Serial Bus (USB) module contains analog and digital components to provide a USB 2.0 full-speed and low-speed embedded Host, full-speed Device or OTG implementation with a minimum of external components. This module in Host mode is intended for use as an embedded host and therefore does not implement a UHCI or OHCI controller.

The USB module consists of the clock generator, the USB voltage comparators, the transceiver, the Serial Interface Engine (SIE), a dedicated USB DMA controller, pull-up and pull-down resistors, and the register interface. A block diagram of the PIC32 USB OTG module is presented in Figure 11-1.

The clock generator provides the 48 MHz clock required for USB full-speed and low-speed communication. The voltage comparators monitor the voltage on the VBUS pin to determine the state of the bus. The transceiver provides the analog translation between the USB bus and the digital logic. The SIE is a state machine that transfers data to and from the endpoint buffers and generates the hardware protocol for data transfers. The USB DMA controller transfers data between the data buffers in RAM and the SIE. The integrated pull-up and pull-down resistors eliminate the need for external signaling components. The register interface allows the CPU to configure and communicate with the module.

The USB module includes the following features:

- USB Full-speed support for host and device
- Low-speed host support
- USB OTG support
- Integrated signaling resistors
- Integrated analog comparators for VBUS monitoring
- Integrated USB transceiver
- Transaction handshaking performed by hardware
- Endpoint buffering anywhere in system RAM
- Integrated DMA to access system RAM and Flash

Note: The implementation and use of the USB specifications, as well as other third party specifications or technologies, may require licensing; including, but not limited to, USB Implementers Forum, Inc. (also referred to as USB-IF). The user is fully responsible for investigating and satisfying any applicable licensing obligations.

FIGURE 11-1: PIC32MX5XX/6XX/7XX FAMILY USB INTERFACE DIAGRAM

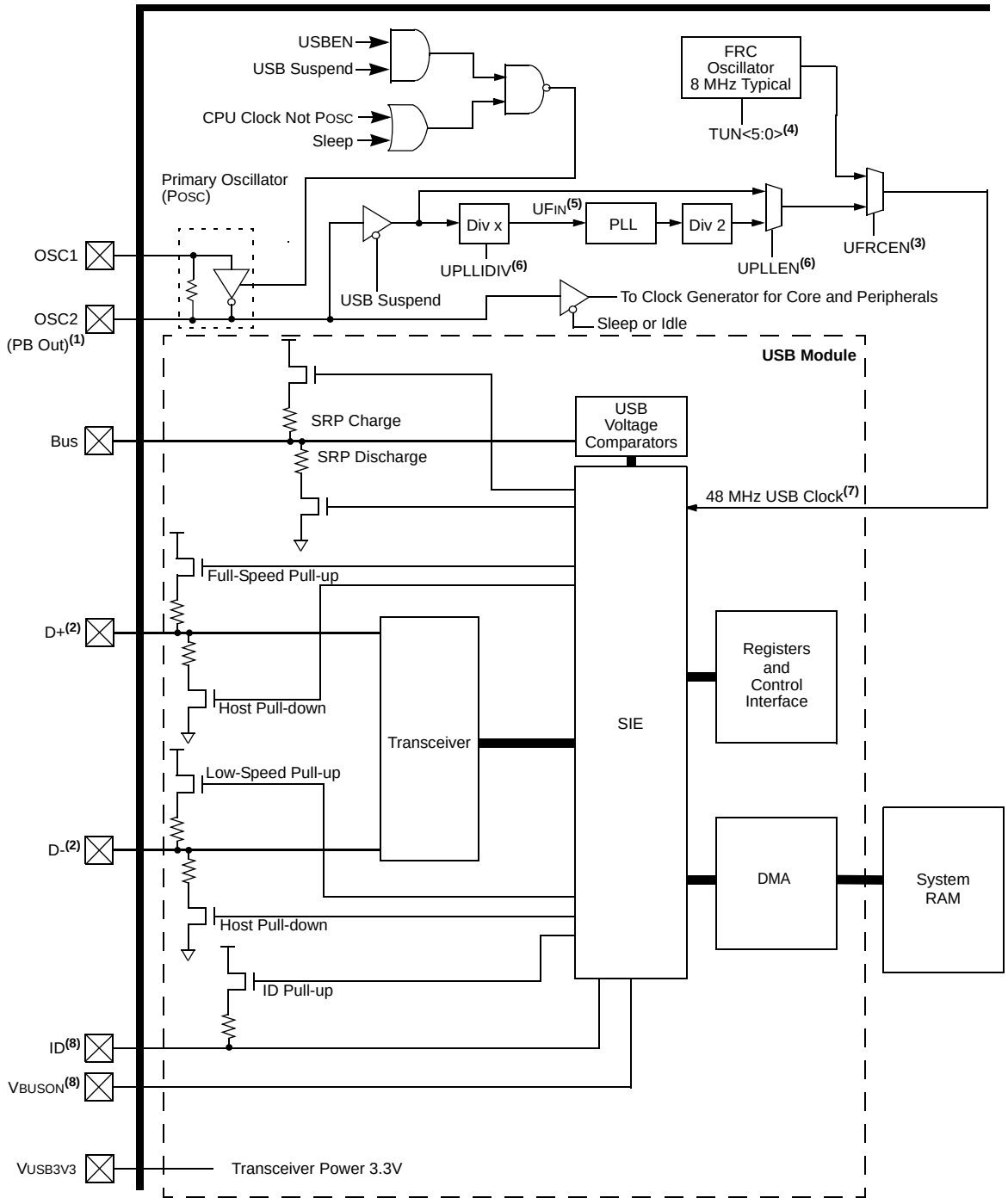

Note 1: PB clock is only available on this pin for select EC modes.
2: Pins can be used as digital inputs when USB is not enabled.
3: This bit field is contained in the OSCCON register.
4: This bit field is contained in the OSCTRM register.
5: USB PLL UFIN requirements: 4 MHz.
6: This bit field is contained in the DEVCFG2 register.
7: A 48 MHz clock is required for proper USB operation.
8: Pins can be used as GPIO when the USB module is disabled.

© 2009-2013 Microchip Technology Inc.

11.1 Control Registers

REGISTER 11-1: U1OTGIR: USB OTG INTERRUPT STATUS REGISTER

Bit Range	Bit 31/23/15/7	Bit 30/22/14/6	Bit 29/21/13/5	Bit 28/20/12/4	Bit 27/19/11/3	Bit 26/18/10/2	Bit 25/17/9/1	Bit 24/16/8/0
31:24	U-0	U-0	U-0	U-0	U-0	U-0	U-0	U-0
	—	—	—	—	—	—	—	—
23:16	U-0	U-0	U-0	U-0	U-0	U-0	U-0	U-0
	—	—	—	—	—	—	—	—
15:8	U-0	U-0	U-0	U-0	U-0	U-0	U-0	U-0
	—	—	—	—	—	—	—	—
7:0	R/WC-0, HS	R/WC-0, HS	R/WC-0, HS	R/WC-0, HS	R/WC-0, HS	R/WC-0, HS	U-0	R/WC-0, HS
	IDIF	T1MSECIF	LSTATEIF	ACTVIF	SESVDIF	SESENDIF	—	VBUSVDIF

Legend:	WC = Write ‘1’ to clear	HS = Hardware Settable bit	
R = Readable bit	W = Writable bit	U = Unimplemented bit, read as ‘0’	
-n = Value at POR	‘1’ = Bit is set	‘0’ = Bit is cleared	x = Bit is unknown

bit 31-8 **Unimplemented:** Read as ‘0’

bit 7 **IDIF:** ID State Change Indicator bit
- 1 = Change in ID state detected
- 0 = No change in ID state detected

bit 6 **T1MSECIF:** 1 Millisecond Timer bit
- 1 = 1 millisecond timer has expired
- 0 = 1 millisecond timer has not expired

bit 5 **LSTATEIF:** Line State Stable Indicator bit
- 1 = USB line state has been stable for 1 ms, but different from last time
- 0 = USB line state has not been stable for 1 ms

bit 4 **ACTVIF:** Bus Activity Indicator bit
- 1 = Activity on the D+, D-, ID or VBUS pins has caused the device to wake-up
- 0 = Activity has not been detected

bit 3 **SESVDIF:** Session Valid Change Indicator bit
- 1 = VBUS voltage has dropped below the session end level
- 0 = VBUS voltage has not dropped below the session end level

bit 2 **SESENDIF:** B-Device VBUS Change Indicator bit
- 1 = A change on the session end input was detected
- 0 = No change on the session end input was detected

bit 1 **Unimplemented:** Read as ‘0’

bit 0 **VBUSVDIF:** A-Device VBUS Change Indicator bit
- 1 = Change on the session valid input detected
- 0 = No change on the session valid input detected

REGISTER 11-2: U1OTGIE: USB OTG INTERRUPT ENABLE REGISTER

Bit Range	Bit 31/23/15/7	Bit 30/22/14/6	Bit 29/21/13/5	Bit 28/20/12/4	Bit 27/19/11/3	Bit 26/18/10/2	Bit 25/17/9/1	Bit 24/16/8/0
31:24	U-0	U-0	U-0	U-0	U-0	U-0	U-0	U-0
	—	—	—	—	—	—	—	—
23:16	U-0	U-0	U-0	U-0	U-0	U-0	U-0	U-0
	—	—	—	—	—	—	—	—
15:8	U-0	U-0	U-0	U-0	U-0	U-0	U-0	U-0
	—	—	—	—	—	—	—	—
7:0	R/W-0	R/W-0	R/W-0	R/W-0	R/W-0	R/W-0	U-0	R/W-0
	IDIE	T1MSECIE	LSTATEIE	ACTVIE	SESVDIE	SESENDIE	—	VBUSVDIE

Legend:			
R = Readable bit	W = Writable bit	U = Unimplemented bit, read as ‘0’	
-n = Value at POR	‘1’ = Bit is set	‘0’ = Bit is cleared	x = Bit is unknown

bit 31-8 **Unimplemented:** Read as ‘0’

bit 7 **IDIE:** ID Interrupt Enable bit
1 = ID interrupt enabled
0 = ID interrupt disabled

bit 6 **T1MSECIE:** 1 Millisecond Timer Interrupt Enable bit
1 = 1 millisecond timer interrupt enabled
0 = 1 millisecond timer interrupt disabled

bit 5 **LSTATEIE:** Line State Interrupt Enable bit
1 = Line state interrupt enabled
0 = Line state interrupt disabled

bit 4 **ACTVIE:** Bus ACTIVITY Interrupt Enable bit
1 = ACTIVITY interrupt enabled
0 = ACTIVITY interrupt disabled

bit 3 **SESVDIE:** Session Valid Interrupt Enable bit
1 = Session valid interrupt enabled
0 = Session valid interrupt disabled

bit 2 **SESENDIE:** B-Session End Interrupt Enable bit
1 = B-session end interrupt enabled
0 = B-session end interrupt disabled

bit 1 **Unimplemented:** Read as ‘0’

bit 0 **VBUSVDIE:** A-VBUS Valid Interrupt Enable bit
1 = A-VBUS valid interrupt enabled
0 = A-VBUS valid interrupt disabled

© 2009-2013 Microchip Technology Inc.

REGISTER 11-3: U1OTGSTAT: USB OTG STATUS REGISTER

Bit Range	Bit 31/23/15/7	Bit 30/22/14/6	Bit 29/21/13/5	Bit 28/20/12/4	Bit 27/19/11/3	Bit 26/18/10/2	Bit 25/17/9/1	Bit 24/16/8/0
31:24	U-0	U-0	U-0	U-0	U-0	U-0	U-0	U-0
	—	—	—	—	—	—	—	—
23:16	U-0	U-0	U-0	U-0	U-0	U-0	U-0	U-0
	—	—	—	—	—	—	—	—
15:8	U-0	U-0	U-0	U-0	U-0	U-0	U-0	U-0
	—	—	—	—	—	—	—	—
7:0	R-0	U-0	R-0	U-0	R-0	R-0	U-0	R-0
	ID	—	LSTATE	—	SESVD	SESEND	—	VBUSVD

Legend:			
R = Readable bit	W = Writable bit	U = Unimplemented bit, read as ‘0’	
-n = Value at POR	‘1’ = Bit is set	‘0’ = Bit is cleared	x = Bit is unknown

bit 31-8 **Unimplemented:** Read as ‘0’

bit 7 **ID:** ID Pin State Indicator bit
1 = No cable is attached or a “type B” cable has been inserted into the USB receptacle
0 = A “type A” OTG cable has been inserted into the USB receptacle

bit 6 **Unimplemented:** Read as ‘0’

bit 5 **LSTATE:** Line State Stable Indicator bit
1 = USB line state (SE0 (U1CON<6> and JSTATE (U1CON<7>) has been stable for the previous 1 ms
0 = USB line state (SE0 (U1CON<6> and JSTATE (U1CON<7>) has not been stable for the previous 1 ms

bit 4 **Unimplemented:** Read as ‘0’

bit 3 **SESVD:** Session Valid Indicator bit
1 = VBUS voltage is above Session Valid on the A or B device
0 = VBUS voltage is below Session Valid on the A or B device

bit 2 **SESEND:** B-Device Session End Indicator bit
1 = VBUS voltage is below Session Valid on the B device
0 = VBUS voltage is above Session Valid on the B device

bit 1 **Unimplemented:** Read as ‘0’

bit 0 **VBUSVD:** A-Device VBUS Valid Indicator bit
1 = VBUS voltage is above Session Valid on the A device
0 = VBUS voltage is below Session Valid on the A device

REGISTER 11-4: U1OTGCON: USB OTG CONTROL REGISTER

Bit Range	Bit 31/23/15/7	Bit 30/22/14/6	Bit 29/21/13/5	Bit 28/20/12/4	Bit 27/19/11/3	Bit 26/18/10/2	Bit 25/17/9/1	Bit 24/16/8/0
31:24	U-0	U-0	U-0	U-0	U-0	U-0	U-0	U-0
	—	—	—	—	—	—	—	—
23:16	U-0	U-0	U-0	U-0	U-0	U-0	U-0	U-0
	—	—	—	—	—	—	—	—
15:8	U-0	U-0	U-0	U-0	U-0	U-0	U-0	U-0
	—	—	—	—	—	—	—	—
7:0	R/W-0	R/W-0	R/W-0	R/W-0	R/W-0	R/W-0	R/W-0	R/W-0
	DPPULUP	DMPULUP	DPPULDWN	DMPULDWN	VBUSON	OTGEN	VBUSCHG	VBUSDIS

Legend:			
R = Readable bit	W = Writable bit	U = Unimplemented bit, read as ‘0’	
-n = Value at POR	‘1’ = Bit is set	‘0’ = Bit is cleared	x = Bit is unknown

bit 31-8 **Unimplemented:** Read as ‘0’

bit 7 **DPPULUP:** D+ Pull-Up Enable bit
1 = D+ data line pull-up resistor is enabled
0 = D+ data line pull-up resistor is disabled

bit 6 **DMPULUP:** D- Pull-Up Enable bit
1 = D- data line pull-up resistor is enabled
0 = D- data line pull-up resistor is disabled

bit 5 **DPPULDWN:** D+ Pull-Down Enable bit
1 = D+ data line pull-down resistor is enabled
0 = D+ data line pull-down resistor is disabled

bit 4 **DMPULDWN:** D- Pull-Down Enable bit
1 = D- data line pull-down resistor is enabled
0 = D- data line pull-down resistor is disabled

bit 3 **VBUSON:** VBUS Power-on bit
1 = VBUS line is powered
0 = VBUS line is not powered

bit 2 **OTGEN:** OTG Functionality Enable bit
1 = DPPULUP, DMPULUP, DPPULDWN and DMPULDWN bits are under software control
0 = DPPULUP, DMPULUP, DPPULDWN and DMPULDWN bits are under USB hardware control

bit 1 **VBUSCHG:** VBUS Charge Enable bit
1 = VBUS line is charged through a pull-up resistor
0 = VBUS line is not charged through a resistor

bit 0 **VBUSDIS:** VBUS Discharge Enable bit
1 = VBUS line is discharged through a pull-down resistor
0 = VBUS line is not discharged through a resistor

© 2009-2013 Microchip Technology Inc.

REGISTER 11-5: U1PWRC: USB POWER CONTROL REGISTER

Bit Range	Bit 31/23/15/7	Bit 30/22/14/6	Bit 29/21/13/5	Bit 28/20/12/4	Bit 27/19/11/3	Bit 26/18/10/2	Bit 25/17/9/1	Bit 24/16/8/0
31:24	U-0	U-0	U-0	U-0	U-0	U-0	U-0	U-0
	—	—	—	—	—	—	—	—
23:16	U-0	U-0	U-0	U-0	U-0	U-0	U-0	U-0
	—	—	—	—	—	—	—	—
15:8	U-0	U-0	U-0	U-0	U-0	U-0	U-0	U-0
	—	—	—	—	—	—	—	—
7:0	R-0	U-0	U-0	R/W-0	R/W-0	U-0	R/W-0	R/W-0
	UACTPND	—	—	USLPGRD	USBBUSY	—	USUSPEND	USBPWR

Legend:			
R = Readable bit	W = Writable bit	U = Unimplemented bit, read as ‘0’	
-n = Value at POR	‘1’ = Bit is set	‘0’ = Bit is cleared	x = Bit is unknown

bit 31-8 **Unimplemented:** Read as ‘0’

bit 7 **UACTPND:** USB Activity Pending bit
1 = USB bus activity has been detected; but an interrupt is pending, it has not been generated yet
0 = An interrupt is not pending

bit 6-5 **Unimplemented:** Read as ‘0’

bit 4 **USLPGRD:** USB Sleep Entry Guard bit
1 = Sleep entry is blocked if USB bus activity is detected or if a notification is pending
0 = USB module does not block Sleep entry

bit 3 **USBBUSY:** USB Module Busy bit
1 = USB module is active or disabled, but not ready to be enabled
0 = USB module is not active and is ready to be enabled

Note: When USBPWR = 0 and USBBUSY = 1, status from all other registers is invalid and writes to all USB module registers produce undefined results.

bit 2 **Unimplemented:** Read as ‘0’

bit 1 **USUSPEND:** USB Suspend Mode bit
1 = USB module is placed in Suspend mode
(The 48 MHz USB clock will be gated off. The transceiver is placed in a low-power state.)
0 = USB module operates normally

bit 0 **USBPWR:** USB Operation Enable bit
1 = USB module is turned on
0 = USB module is disabled
(Outputs held inactive, device pins not used by USB, analog features are shut down to reduce power consumption.)

REGISTER 11-6: U1IR: USB INTERRUPT REGISTER

Bit Range	Bit 31/23/15/7	Bit 30/22/14/6	Bit 29/21/13/5	Bit 28/20/12/4	Bit 27/19/11/3	Bit 26/18/10/2	Bit 25/17/9/1	Bit 24/16/8/0
31:24	U-0	U-0	U-0	U-0	U-0	U-0	U-0	U-0
	—	—	—	—	—	—	—	—
23:16	U-0	U-0	U-0	U-0	U-0	U-0	U-0	U-0
	—	—	—	—	—	—	—	—
15:8	U-0	U-0	U-0	U-0	U-0	U-0	U-0	U-0
	—	—	—	—	—	—	—	—
7:0	R/WC-0, HS	R/WC-0, HS	R/WC-0, HS	R/WC-0, HS	R/WC-0, HS	R/WC-0, HS	R-0	R/WC-0, HS
	STALLIF	ATTACHIF(1)	RESUMEIF(2)	IDLEIF	TRNIF(3)	SOFIF	UERRIF(4)	URSTIF(5) / DETACHIF(6)

Legend:	WC = Write ‘1’ to clear	HS = Hardware Settable bit	
R = Readable bit	W = Writable bit	U = Unimplemented bit, read as ‘0’	
-n = Value at POR	‘1’ = Bit is set	‘0’ = Bit is cleared	x = Bit is unknown

bit 31-8 **Unimplemented:** Read as ‘0’

bit 7 **STALLIF:** STALL Handshake Interrupt bit
- 1 = In Host mode a STALL handshake was received during the handshake phase of the transaction. In Device mode, a STALL handshake was transmitted during the handshake phase of the transaction.
- 0 = STALL handshake has not been sent

bit 6 **ATTACHIF:** Peripheral Attach Interrupt bit(1)
- 1 = Peripheral attachment was detected by the USB module
- 0 = Peripheral attachment was not detected

bit 5 **RESUMEIF:** Resume Interrupt bit(2)
- 1 = K-State is observed on the D+ or D- pin for 2.5 µs
- 0 = K-State is not observed

bit 4 **IDLEIF:** Idle Detect Interrupt bit
- 1 = Idle condition detected (constant Idle state of 3 ms or more)
- 0 = No Idle condition detected

bit 3 **TRNIF:** Token Processing Complete Interrupt bit(3)
- 1 = Processing of current token is complete; a read of the U1STAT register will provide endpoint information
- 0 = Processing of current token not complete

bit 2 **SOFIF:** SOF Token Interrupt bit
- 1 = SOF token received by the peripheral or the SOF threshold reached by the host
- 0 = SOF token was not received nor threshold reached

bit 1 **UERRIF**: USB Error Condition Interrupt bit(4)
- 1 = Unmasked error condition has occurred
- 0 = Unmasked error condition has not occurred

bit 0 **URSTIF:** USB Reset Interrupt bit (Device mode)(5)
- 1 = Valid USB Reset has occurred
- 0 = No USB Reset has occurred

DETACHIF: USB Detach Interrupt bit (Host mode)(6)
- 1 = Peripheral detachment was detected by the USB module
- 0 = Peripheral detachment was not detected

Note 1: This bit is only valid if the HOSTEN bit is set (see Register 11-11), there is no activity on the USB for 2.5 µs, and the current bus state is not SE0.

2: When not in Suspend mode, this interrupt should be disabled.

3: Clearing this bit will cause the STAT FIFO to advance.

4: Only error conditions enabled through the U1EIE register will set this bit.

5: Device mode.

6: Host mode.

© 2009-2013 Microchip Technology Inc.

REGISTER 11-7: U1IE: USB INTERRUPT ENABLE REGISTER

Bit Range	Bit 31/23/15/7	Bit 30/22/14/6	Bit 29/21/13/5	Bit 28/20/12/4	Bit 27/19/11/3	Bit 26/18/10/2	Bit 25/17/9/1	Bit 24/16/8/0
31:24	U-0	U-0	U-0	U-0	U-0	U-0	U-0	U-0
	—	—	—	—	—	—	—	—
23:16	U-0	U-0	U-0	U-0	U-0	U-0	U-0	U-0
	—	—	—	—	—	—	—	—
15:8	U-0	U-0	U-0	U-0	U-0	U-0	U-0	U-0
	—	—	—	—	—	—	—	—
7:0	R/W-0	R/W-0	R/W-0	R/W-0	R/W-0	R/W-0	R/W-0	R/W-0
	STALLIE	ATTACHIE	RESUMEIE	IDLEIE	TRNIE	SOFIE	UERRIE(1)	URSTIE(2) / DETACHIE(3)

Legend:			
R = Readable bit	W = Writable bit	U = Unimplemented bit, read as ‘0’	
-n = Value at POR	‘1’ = Bit is set	‘0’ = Bit is cleared	x = Bit is unknown

bit 31-8 **Unimplemented:** Read as ‘0’

bit 7 **STALLIE:** STALL Handshake Interrupt Enable bit
1 = STALL interrupt enabled
0 = STALL interrupt disabled

bit 6 **ATTACHIE:** ATTACH Interrupt Enable bit
1 = ATTACH interrupt enabled
0 = ATTACH interrupt disabled

bit 5 **RESUMEIE:** RESUME Interrupt Enable bit
1 = RESUME interrupt enabled
0 = RESUME interrupt disabled

bit 4 **IDLEIE:** Idle Detect Interrupt Enable bit
1 = Idle interrupt enabled
0 = Idle interrupt disabled

bit 3 **TRNIE:** Token Processing Complete Interrupt Enable bit
1 = TRNIF interrupt enabled
0 = TRNIF interrupt disabled

bit 2 **SOFIE:** SOF Token Interrupt Enable bit
1 = SOFIF interrupt enabled
0 = SOFIF interrupt disabled

bit 1 **UERRIE:** USB Error Interrupt Enable bit(1)
1 = USB Error interrupt enabled
0 = USB Error interrupt disabled

bit 0 **URSTIE:** USB Reset Interrupt Enable bit(2)
1 = URSTIF interrupt enabled
0 = URSTIF interrupt disabled

DETACHIE: USB Detach Interrupt Enable bit(3)
1 = DATTCHIF interrupt enabled
0 = DATTCHIF interrupt disabled

Note 1: For an interrupt to propagate USBIF, the UERRIE bit (U1IE<1>) must be set.
2: Device mode.
3: Host mode.

REGISTER 11-8: U1EIR: USB ERROR INTERRUPT STATUS REGISTER

Bit Range	Bit 31/23/15/7	Bit 30/22/14/6	Bit 29/21/13/5	Bit 28/20/12/4	Bit 27/19/11/3	Bit 26/18/10/2	Bit 25/17/9/1	Bit 24/16/8/0
31:24	U-0	U-0	U-0	U-0	U-0	U-0	U-0	U-0
	—	—	—	—	—	—	—	—
23:16	U-0	U-0	U-0	U-0	U-0	U-0	U-0	U-0
	—	—	—	—	—	—	—	—
15:8	U-0	U-0	U-0	U-0	U-0	U-0	U-0	U-0
	—	—	—	—	—	—	—	—
7:0	R/WC-0, HS	R/WC-0, HS	R/WC-0, HS	R/WC-0, HS	R/WC-0, HS	R/WC-0, HS	R/WC-0, HS	R/WC-0, HS
	BTSEF	BMXEF	DMAEF(1)	BTOEF(2)	DFN8EF	CRC16EF	CRC5EF(4) EOFEF(3,5)	PIDEF

Legend:	WC = Write ‘1’ to clear	HS = Hardware Settable bit	
R = Readable bit	W = Writable bit	U = Unimplemented bit, read as ‘0’	
-n = Value at POR	‘1’ = Bit is set	‘0’ = Bit is cleared	x = Bit is unknown

bit 31-8 **Unimplemented:** Read as ‘0’

bit 7 **BTSEF:** Bit Stuff Error Flag bit
1 = Packet rejected due to bit stuff error
0 = Packet accepted

bit 6 **BMXEF:** Bus Matrix Error Flag bit
1 = Invalid base address of the BDT, or the address of an individual buffer pointed to by a BDT entry
0 = No address error

bit 5 **DMAEF:** DMA Error Flag bit(1)
1 = USB DMA error condition detected
0 = No DMA error

bit 4 **BTOEF:** Bus Turnaround Time-Out Error Flag bit(2)
1 = Bus turnaround time-out has occurred
0 = No bus turnaround time-out

bit 3 **DFN8EF:** Data Field Size Error Flag bit
1 = Data field received is not an integral number of bytes
0 = Data field received is an integral number of bytes

bit 2 **CRC16EF:** CRC16 Failure Flag bit
1 = Data packet rejected due to CRC16 error
0 = Data packet accepted

bit 1 **CRC5EF:** CRC5 Host Error Flag bit(4)
1 = Token packet rejected due to CRC5 error
0 = Token packet accepted
EOFEF: EOF Error Flag bit(3,5)
1 = EOF error condition detected
0 = No EOF error condition

bit 0 **PIDEF:** PID Check Failure Flag bit
1 = PID check failed
0 = PID check passed

Note 1: This type of error occurs when the module’s request for the DMA bus is not granted in time to service the module’s demand for memory, resulting in an overflow or underflow condition, and/or the allocated buffer size is not sufficient to store the received data packet causing it to be truncated.

2: This type of error occurs when more than 16-bit-times of Idle from the previous End-of-Packet (EOP) has elapsed.

3: This type of error occurs when the module is transmitting or receiving data and the SOF counter has reached zero.

4: Device mode.

5: Host mode.

© 2009-2013 Microchip Technology Inc.

REGISTER 11-9: U1EIE: USB ERROR INTERRUPT ENABLE REGISTER

Bit Range	Bit 31/23/15/7	Bit 30/22/14/6	Bit 29/21/13/5	Bit 28/20/12/4	Bit 27/19/11/3	Bit 26/18/10/2	Bit 25/17/9/1	Bit 24/16/8/0
31:24	U-0	U-0	U-0	U-0	U-0	U-0	U-0	U-0
	—	—	—	—	—	—	—	—
23:16	U-0	U-0	U-0	U-0	U-0	U-0	U-0	U-0
	—	—	—	—	—	—	—	—
15:8	U-0	U-0	U-0	U-0	U-0	U-0	U-0	U-0
	—	—	—	—	—	—	—	—
7:0	R/W-0	R/W-0	R/W-0	R/W-0	R/W-0	R/W-0	R/W-0	R/W-0
	BTSEE	BMXEE	DMAEE	BTOEE	DFN8EE	CRC16EE	CRC5EE(1) / EOFEE(2)	PIDEE

Legend:			
R = Readable bit	W = Writable bit	U = Unimplemented bit, read as ‘0’	
-n = Value at POR	‘1’ = Bit is set	‘0’ = Bit is cleared	x = Bit is unknown

bit 31-8 **Unimplemented:** Read as ‘0’

bit 7 **BTSEE:** Bit Stuff Error Interrupt Enable bit
1 = BTSEF interrupt enabled
0 = BTSEF interrupt disabled

bit 6 **BMXEE:** Bus Matrix Error Interrupt Enable bit
1 = BMXEF interrupt enabled
0 = BMXEF interrupt disabled

bit 5 **DMAEE:** DMA Error Interrupt Enable bit
1 = DMAEF interrupt enabled
0 = DMAEF interrupt disabled

bit 4 **BTOEE:** Bus Turnaround Time-out Error Interrupt Enable bit
1 = BTOEF interrupt enabled
0 = BTOEF interrupt disabled

bit 3 **DFN8EE:** Data Field Size Error Interrupt Enable bit
1 = DFN8EF interrupt enabled
0 = DFN8EF interrupt disabled

bit 2 **CRC16EE:** CRC16 Failure Interrupt Enable bit
1 = CRC16EF interrupt enabled
0 = CRC16EF interrupt disabled

bit 1 **CRC5EE:** CRC5 Host Error Interrupt Enable bit(1)
1 = CRC5EF interrupt enabled
0 = CRC5EF interrupt disabled
EOFEE: EOF Error Interrupt Enable bit(2)
1 = EOF interrupt enabled
0 = EOF interrupt disabled

bit 0 **PIDEE:** PID Check Failure Interrupt Enable bit
1 = PIDEF interrupt enabled
0 = PIDEF interrupt disabled

Note 1: Device mode.
2: Host mode.

Note: For an interrupt to propagate USBIF, the UERRIE bit (U1IE<1>) must be set.

REGISTER 11-10: U1STAT: USB STATUS REGISTER

Bit Range	Bit 31/23/15/7	Bit 30/22/14/6	Bit 29/21/13/5	Bit 28/20/12/4	Bit 27/19/11/3	Bit 26/18/10/2	Bit 25/17/9/1	Bit 24/16/8/0
31:24	U-0	U-0	U-0	U-0	U-0	U-0	U-0	U-0
	—	—	—	—	—	—	—	—
23:16	U-0	U-0	U-0	U-0	U-0	U-0	U-0	U-0
	—	—	—	—	—	—	—	—
15:8	U-0	U-0	U-0	U-0	U-0	U-0	U-0	U-0
	—	—	—	—	—	—	—	—
7:0	R-x	R-x	R-x	R-x	R-x	R-x	U-0	U-0
	ENDPT<3:0>				DIR	PPBI	—	—

Legend:			
R = Readable bit	W = Writable bit	U = Unimplemented bit, read as ‘0’	
-n = Value at POR	‘1’ = Bit is set	‘0’ = Bit is cleared	x = Bit is unknown

bit 31-8 **Unimplemented:** Read as ‘0’

bit 7-4 **ENDPT<3:0>:** Encoded Number of Last Endpoint Activity bits
(Represents the number of the BDT, updated by the last USB transfer.)

1111 = Endpoint 15
1110 = Endpoint 14
•
•
•
0001 = Endpoint 1
0000 = Endpoint 0

bit 3 **DIR:** Last Buffer Descriptor Direction Indicator bit

1 = Last transaction was a transmit transfer (TX)
0 = Last transaction was a receive transfer (RX)

bit 2 **PPBI:** Ping-Pong Buffer Descriptor Pointer Indicator bit

1 = The last transaction was to the Odd buffer descriptor bank
0 = The last transaction was to the Even buffer descriptor bank

bit 1-0 **Unimplemented:** Read as ‘0’

Note: The U1STAT register is a window into a 4-byte FIFO maintained by the USB module. U1STAT value is only valid when U1IR<TRNIF> is active. Clearing the U1IR<TRNIF> bit advances the FIFO. Data in register is invalid when U1IR<TRNIF> = 0.

© 2009-2013 Microchip Technology Inc.

REGISTER 11-11: U1CON: USB CONTROL REGISTER

Bit Range	Bit 31/23/15/7	Bit 30/22/14/6	Bit 29/21/13/5	Bit 28/20/12/4	Bit 27/19/11/3	Bit 26/18/10/2	Bit 25/17/9/1	Bit 24/16/8/0
31:24	U-0	U-0	U-0	U-0	U-0	U-0	U-0	U-0
	—	—	—	—	—	—	—	—
23:16	U-0	U-0	U-0	U-0	U-0	U-0	U-0	U-0
	—	—	—	—	—	—	—	—
15:8	U-0	U-0	U-0	U-0	U-0	U-0	U-0	U-0
	—	—	—	—	—	—	—	—
7:0	R-x	R-x	R/W-0	R/W-0	R/W-0	R/W-0	R/W-0	R/W-0
	JSTATE	SE0	PKTDIS(4) / TOKBUSY(1,5)	USBRST	HOSTEN(2)	RESUME(3)	PPBRST	USBEN(4) / SOFEN(5)

Legend:			
R = Readable bit	W = Writable bit	U = Unimplemented bit, read as ‘0’	
-n = Value at POR	‘1’ = Bit is set	‘0’ = Bit is cleared	x = Bit is unknown

bit 31-8 **Unimplemented:** Read as ‘0’

bit 7 **JSTATE:** Live Differential Receiver JSTATE flag bit
1 = JSTATE was detected on the USB
0 = JSTATE was not detected

bit 6 **SE0:** Live Single-Ended Zero flag bit
1 = Single-ended zero was detected on the USB
0 = Single-ended zero was not detected

bit 5 **PKTDIS:** Packet Transfer Disable bit(4)
1 = Token and packet processing disabled (set upon SETUP token received)
0 = Token and packet processing enabled
TOKBUSY: Token Busy Indicator bit(1,5)
1 = Token being executed by the USB module
0 = No token being executed

bit 4 **USBRST:** Module Reset bit(5)
1 = USB reset generated
0 = USB reset terminated

bit 3 **HOSTEN:** Host Mode Enable bit(2)
1 = USB host capability enabled
0 = USB host capability disabled

bit 2 **RESUME:** RESUME Signaling Enable bit(3)
1 = RESUME signaling activated
0 = RESUME signaling disabled

Note 1: Software is required to check this bit before issuing another token command to the U1TOK register (see Register 11-15).
2: All host control logic is reset any time that the value of this bit is toggled.
3: Software must set RESUME for 10 ms in Device mode, or for 25 ms in Host mode, and then clear it to enable remote wake-up. In Host mode, the USB module will append a low-speed EOP to the RESUME signaling when this bit is cleared.
4: Device mode.
5: Host mode.

REGISTER 11-11: U1CON: USB CONTROL REGISTER (CONTINUED)

bit 1 **PPBRST:** Ping-Pong Buffers Reset bit
1 = Reset all Even/Odd buffer pointers to the Even buffer descriptor banks
0 = Even/Odd buffer pointers are not reset

bit 0 **USBEN:** USB Module Enable bit(4)
1 = USB module and supporting circuitry enabled
0 = USB module and supporting circuitry disabled

SOFEN: SOF Enable bit(5)
1 = SOF token sent every 1 ms
0 = SOF token disabled

Note 1: Software is required to check this bit before issuing another token command to the U1TOK register (see Register 11-15).
2: All host control logic is reset any time that the value of this bit is toggled.
3: Software must set RESUME for 10 ms in Device mode, or for 25 ms in Host mode, and then clear it to enable remote wake-up. In Host mode, the USB module will append a low-speed EOP to the RESUME signaling when this bit is cleared.
4: Device mode.
5: Host mode.

© 2009-2013 Microchip Technology Inc.

REGISTER 11-12: U1ADDR: USB ADDRESS REGISTER

Bit Range	Bit 31/23/15/7	Bit 30/22/14/6	Bit 29/21/13/5	Bit 28/20/12/4	Bit 27/19/11/3	Bit 26/18/10/2	Bit 25/17/9/1	Bit 24/16/8/0
31:24	U-0	U-0	U-0	U-0	U-0	U-0	U-0	U-0
	—	—	—	—	—	—	—	—
23:16	U-0	U-0	U-0	U-0	U-0	U-0	U-0	U-0
	—	—	—	—	—	—	—	—
15:8	U-0	U-0	U-0	U-0	U-0	U-0	U-0	U-0
	—	—	—	—	—	—	—	—
7:0	R/W-0	R/W-0	R/W-0	R/W-0	R/W-0	R/W-0	R/W-0	R/W-0
	LSPDEN	DEVADDR<6:0>						

Legend:			
R = Readable bit	W = Writable bit	U = Unimplemented bit, read as ‘0’	
-n = Value at POR	‘1’ = Bit is set	‘0’ = Bit is cleared	x = Bit is unknown

bit 31-8 **Unimplemented:** Read as ‘0’

bit 7 **LSPDEN:** Low-Speed Enable Indicator bit
1 = Next token command to be executed at low-speed
0 = Next token command to be executed at full-speed

bit 6-0 **DEVADDR<6:0>:** 7-bit USB Device Address bits

REGISTER 11-13: U1FRML: USB FRAME NUMBER LOW REGISTER

Bit Range	Bit 31/23/15/7	Bit 30/22/14/6	Bit 29/21/13/5	Bit 28/20/12/4	Bit 27/19/11/3	Bit 26/18/10/2	Bit 25/17/9/1	Bit 24/16/8/0
31:24	U-0	U-0	U-0	U-0	U-0	U-0	U-0	U-0
	—	—	—	—	—	—	—	—
23:16	U-0	U-0	U-0	U-0	U-0	U-0	U-0	U-0
	—	—	—	—	—	—	—	—
15:8	U-0	U-0	U-0	U-0	U-0	U-0	U-0	U-0
	—	—	—	—	—	—	—	—
7:0	R-0	R-0	R-0	R-0	R-0	R-0	R-0	R-0
	FRML<7:0>							

Legend:			
R = Readable bit	W = Writable bit	U = Unimplemented bit, read as ‘0’	
-n = Value at POR	‘1’ = Bit is set	‘0’ = Bit is cleared	x = Bit is unknown

bit 31-8 **Unimplemented:** Read as ‘0’

bit 7-0 **FRML<7:0>:** 11-bit Frame Number Lower bits
The register bits are updated with the current frame number whenever a SOF TOKEN is received.

REGISTER 11-14: U1FRMH: USB FRAME NUMBER HIGH REGISTER

Bit Range	Bit 31/23/15/7	Bit 30/22/14/6	Bit 29/21/13/5	Bit 28/20/12/4	Bit 27/19/11/3	Bit 26/18/10/2	Bit 25/17/9/1	Bit 24/16/8/0
31:24	U-0	U-0	U-0	U-0	U-0	U-0	U-0	U-0
	—	—	—	—	—	—	—	—
23:16	U-0	U-0	U-0	U-0	U-0	U-0	U-0	U-0
	—	—	—	—	—	—	—	—
15:8	U-0	U-0	U-0	U-0	U-0	U-0	U-0	U-0
	—	—	—	—	—	—	—	—
7:0	U-0	U-0	U-0	U-0	U-0	R-0	R-0	R-0
	—	—	—	—	—	FRMH<2:0>		

Legend:			
R = Readable bit	W = Writable bit	U = Unimplemented bit, read as ‘0’	
-n = Value at POR	‘1’ = Bit is set	‘0’ = Bit is cleared	x = Bit is unknown

bit 31-3 **Unimplemented:** Read as ‘0’

bit 2-0 **FRMH<2:0>:** Upper 3 bits of the Frame Numbers bits
These register bits are updated with the current frame number whenever a SOF TOKEN is received.

REGISTER 11-15: U1TOK: USB TOKEN REGISTER

Bit Range	Bit 31/23/15/7	Bit 30/22/14/6	Bit 29/21/13/5	Bit 28/20/12/4	Bit 27/19/11/3	Bit 26/18/10/2	Bit 25/17/9/1	Bit 24/16/8/0
31:24	U-0	U-0	U-0	U-0	U-0	U-0	U-0	U-0
	—	—	—	—	—	—	—	—
23:16	U-0	U-0	U-0	U-0	U-0	U-0	U-0	U-0
	—	—	—	—	—	—	—	—
15:8	U-0	U-0	U-0	U-0	U-0	U-0	U-0	U-0
	—	—	—	—	—	—	—	—
7:0	R/W-0	R/W-0	R/W-0	R/W-0	R/W-0	R/W-0	R/W-0	R/W-0
	PID<3:0>				EP<3:0>			

Legend:			
R = Readable bit	W = Writable bit	U = Unimplemented bit, read as ‘0’	
-n = Value at POR	‘1’ = Bit is set	‘0’ = Bit is cleared	x = Bit is unknown

bit 31-8 **Unimplemented:** Read as ‘0’

bit 7-4 **PID<3:0>:** Token Type Indicator bits(1)
1101 = SETUP (TX) token type transaction
1001 = IN (RX) token type transaction
0001 = OUT (TX) token type transaction
Note: All other values not listed, are Reserved and must not be used.

bit 3-0 **EP<3:0>:** Token Command Endpoint Address bits
The four bit value must specify a valid endpoint.

© 2009-2013 Microchip Technology Inc.

REGISTER 11-16: U1SOF: USB SOF THRESHOLD REGISTER

Bit Range	Bit 31/23/15/7	Bit 30/22/14/6	Bit 29/21/13/5	Bit 28/20/12/4	Bit 27/19/11/3	Bit 26/18/10/2	Bit 25/17/9/1	Bit 24/16/8/0
31:24	U-0	U-0	U-0	U-0	U-0	U-0	U-0	U-0
	—	—	—	—	—	—	—	—
23:16	U-0	U-0	U-0	U-0	U-0	U-0	U-0	U-0
	—	—	—	—	—	—	—	—
15:8	U-0	U-0	U-0	U-0	U-0	U-0	U-0	U-0
	—	—	—	—	—	—	—	—
7:0	R/W-0	R/W-0	R/W-0	R/W-0	R/W-0	R/W-0	R/W-0	R/W-0
	CNT<7:0>							

Legend:			
R = Readable bit	W = Writable bit	U = Unimplemented bit, read as ‘0’	
-n = Value at POR	‘1’ = Bit is set	‘0’ = Bit is cleared	x = Bit is unknown

bit 31-8 **Unimplemented:** Read as ‘0’

bit 7-0 **CNT<7:0>:** SOF Threshold Value bits

Typical values of the threshold are:
01001010 = 64-byte packet
00101010 = 32-byte packet
00011010 = 16-byte packet
00010010 = 8-byte packet

REGISTER 11-17: U1BDTP1: USB BUFFER DESCRIPTOR TABLE PAGE 1 REGISTER

Bit Range	Bit 31/23/15/7	Bit 30/22/14/6	Bit 29/21/13/5	Bit 28/20/12/4	Bit 27/19/11/3	Bit 26/18/10/2	Bit 25/17/9/1	Bit 24/16/8/0
31:24	U-0	U-0	U-0	U-0	U-0	U-0	U-0	U-0
	—	—	—	—	—	—	—	—
23:16	U-0	U-0	U-0	U-0	U-0	U-0	U-0	U-0
	—	—	—	—	—	—	—	—
15:8	U-0	U-0	U-0	U-0	U-0	U-0	U-0	U-0
	—	—	—	—	—	—	—	—
7:0	R/W-0	R/W-0	R/W-0	R/W-0	R/W-0	R/W-0	R/W-0	U-0
	BDTPTRL<15:9>							—

Legend:			
R = Readable bit	W = Writable bit	U = Unimplemented bit, read as ‘0’	
-n = Value at POR	‘1’ = Bit is set	‘0’ = Bit is cleared	x = Bit is unknown

bit 31-8 **Unimplemented:** Read as ‘0’

bit 7-1 **BDTPTRL<15:9>:** BDT Base Address bits

This 7-bit value provides address bits 15 through 9 of the BDT base address, which defines the starting location of the BDT in system memory.

The 32-bit BDT base address is 512-byte aligned.

bit 0 **Unimplemented:** Read as ‘0’

REGISTER 11-18: U1BDTP2: USB BUFFER DESCRIPTOR TABLE PAGE 2 REGISTER

Bit Range	Bit 31/23/15/7	Bit 30/22/14/6	Bit 29/21/13/5	Bit 28/20/12/4	Bit 27/19/11/3	Bit 26/18/10/2	Bit 25/17/9/1	Bit 24/16/8/0
31:24	U-0	U-0	U-0	U-0	U-0	U-0	U-0	U-0
	—	—	—	—	—	—	—	—
23:16	U-0	U-0	U-0	U-0	U-0	U-0	U-0	U-0
	—	—	—	—	—	—	—	—
15:8	U-0	U-0	U-0	U-0	U-0	U-0	U-0	U-0
	—	—	—	—	—	—	—	—
7:0	R/W-0	R/W-0	R/W-0	R/W-0	R/W-0	R/W-0	R/W-0	R/W-0
	BDTPTRH<23:16>							

Legend:			
R = Readable bit	W = Writable bit	U = Unimplemented bit, read as ‘0’	
-n = Value at POR	‘1’ = Bit is set	‘0’ = Bit is cleared	x = Bit is unknown

bit 31-8 **Unimplemented:** Read as ‘0’

bit 7-0 **BDTPTRH<23:16>:** BDT Base Address bits

This 8-bit value provides address bits 23 through 16 of the BDT base address, which defines the starting location of the BDT in system memory.

The 32-bit BDT base address is 512-byte aligned.

REGISTER 11-19: U1BDTP3: USB BUFFER DESCRIPTOR TABLE PAGE 3 REGISTER

Bit Range	Bit 31/23/15/7	Bit 30/22/14/6	Bit 29/21/13/5	Bit 28/20/12/4	Bit 27/19/11/3	Bit 26/18/10/2	Bit 25/17/9/1	Bit 24/16/8/0
31:24	U-0	U-0	U-0	U-0	U-0	U-0	U-0	U-0
	—	—	—	—	—	—	—	—
23:16	U-0	U-0	U-0	U-0	U-0	U-0	U-0	U-0
	—	—	—	—	—	—	—	—
15:8	U-0	U-0	U-0	U-0	U-0	U-0	U-0	U-0
	—	—	—	—	—	—	—	—
7:0	R/W-0	R/W-0	R/W-0	R/W-0	R/W-0	R/W-0	R/W-0	R/W-0
	BDTPTRU<31:24>							

Legend:			
R = Readable bit	W = Writable bit	U = Unimplemented bit, read as ‘0’	
-n = Value at POR	‘1’ = Bit is set	‘0’ = Bit is cleared	x = Bit is unknown

bit 31-8 **Unimplemented:** Read as ‘0’

bit 7-0 **BDTPTRU<31:24>:** BDT Base Address bits

This 8-bit value provides address bits 31 through 24 of the BDT base address, defines the starting location of the BDT in system memory.

The 32-bit BDT base address is 512-byte aligned.

© 2009-2013 Microchip Technology Inc.

REGISTER 11-20: U1CNFG1: USB CONFIGURATION 1 REGISTER

Bit Range	Bit 31/23/15/7	Bit 30/22/14/6	Bit 29/21/13/5	Bit 28/20/12/4	Bit 27/19/11/3	Bit 26/18/10/2	Bit 25/17/9/1	Bit 24/16/8/0
31:24	U-0	U-0	U-0	U-0	U-0	U-0	U-0	U-0
	—	—	—	—	—	—	—	—
23:16	U-0	U-0	U-0	U-0	U-0	U-0	U-0	U-0
	—	—	—	—	—	—	—	—
15:8	U-0	U-0	U-0	U-0	U-0	U-0	U-0	U-0
	—	—	—	—	—	—	—	—
7:0	R/W-0	R/W-0	U-0	R/W-0	U-0	U-0	U-0	R/W-0
	UTEYE	UOEMON	—	USBSIDL	—	—	—	UASUSPND

Legend:			
R = Readable bit	W = Writable bit	U = Unimplemented bit, read as ‘0’	
-n = Value at POR	‘1’ = Bit is set	‘0’ = Bit is cleared	x = Bit is unknown

bit 31-8 **Unimplemented:** Read as ‘0’

bit 7 **UTEYE:** USB Eye-Pattern Test Enable bit
1 = Eye-Pattern Test enabled
0 = Eye-Pattern Test disabled

bit 6 **UOEMON:** USB $\overline{\text{OE}}$ Monitor Enable bit
1 = $\overline{\text{OE}}$ signal active; it indicates intervals during which the D+/D- lines are driving
0 = $\overline{\text{OE}}$ signal inactive

bit 5 **Unimplemented:** Read as ‘0’

bit 4 **USBSIDL:** Stop in Idle Mode bit
1 = Discontinue module operation when device enters Idle mode
0 = Continue module operation in Idle mode

bit 3-1 **Unimplemented:** Read as ‘0’

bit 0 **UASUSPND:** Automatic Suspend Enable bit
1 = USB module automatically suspends upon entry to Sleep mode. See the USUSPEND bit (U1PWRC<1>) in Register 11-5.
0 = USB module does not automatically suspend upon entry to Sleep mode. Software must use the USUSPEND bit (U1PWRC<1>) to suspend the module, including the USB 48 MHz clock.

REGISTER 11-21: U1EP0-U1EP15: USB ENDPOINT CONTROL REGISTER

Bit Range	Bit 31/23/15/7	Bit 30/22/14/6	Bit 29/21/13/5	Bit 28/20/12/4	Bit 27/19/11/3	Bit 26/18/10/2	Bit 25/17/9/1	Bit 24/16/8/0
31:24	U-0	U-0	U-0	U-0	U-0	U-0	U-0	U-0
	—	—	—	—	—	—	—	—
23:16	U-0	U-0	U-0	U-0	U-0	U-0	U-0	U-0
	—	—	—	—	—	—	—	—
15:8	U-0	U-0	U-0	U-0	U-0	U-0	U-0	U-0
	—	—	—	—	—	—	—	—
7:0	R/W-0	R/W-0	U-0	R/W-0	R/W-0	R/W-0	R/W-0	R/W-0
	LSPD	RETRYDIS	—	EPCONDIS	EPRXEN	EPTXEN	EPSTALL	EPHSHK

Legend:			
R = Readable bit	W = Writable bit	U = Unimplemented bit, read as ‘0’	
-n = Value at POR	‘1’ = Bit is set	‘0’ = Bit is cleared	x = Bit is unknown

bit 31-8 **Unimplemented:** Read as ‘0’

bit 7 **LSPD:** Low-Speed Direct Connection Enable bit (Host mode and U1EP0 only)
1 = Direct connection to a low-speed device enabled
0 = Direct connection to a low-speed device disabled; hub required with PRE_PID

bit 6 **RETRYDIS:** Retry Disable bit (Host mode and U1EP0 only)
1 = Retry NACK’d transactions disabled
0 = Retry NACK’d transactions enabled; retry done in hardware

bit 5 **Unimplemented:** Read as ‘0’

bit 4 **EPCONDIS:** Bidirectional Endpoint Control bit
If EPTXEN = 1 and EPRXEN = 1:
1 = Disable Endpoint ‘n’ from control transfers; only TX and RX transfers are allowed
0 = Enable Endpoint ‘n’ for control (SETUP) transfers; TX and RX transfers are also allowed
Otherwise, this bit is ignored.

bit 3 **EPRXEN:** Endpoint Receive Enable bit
1 = Endpoint ’n’ receive enabled
0 = Endpoint ’n’ receive disabled

bit 2 **EPTXEN:** Endpoint Transmit Enable bit
1 = Endpoint ’n’ transmit enabled
0 = Endpoint ’n’ transmit disabled

bit 1 **EPSTALL:** Endpoint Stall Status bit
1 = Endpoint ’n’ was stalled
0 = Endpoint ’n’ was not stalled

bit 0 **EPHSHK:** Endpoint Handshake Enable bit
1 = Endpoint Handshake enabled
0 = Endpoint Handshake disabled (typically used for isochronous endpoints)

© 2009-2013 Microchip Technology Inc.

12.0 I/O PORTS

Note 1: This data sheet summarizes the features of the PIC32MX5XX/6XX/7XX family of devices. It is not intended to be a comprehensive reference source. To complement the information in this data sheet, refer to **Section 12. "I/O Ports"** (DS60001120) in the *"PIC32 Family Reference Manual"*, which is available from the Microchip web site (www.microchip.com/PIC32).

2: Some registers and associated bits described in this section may not be available on all devices. Refer to **Section 4.0 "Memory Organization"** in this data sheet for device-specific register and bit information.

General purpose I/O pins are the simplest of peripherals. They allow the PIC32 MCU to monitor and control other devices. To add flexibility and functionality, some pins are multiplexed with alternate function(s). These functions depend on which peripheral features are on the device. In general, when a peripheral is functioning, that pin may not be used as a general purpose I/O pin.

Following are some of the key features of this module:

- Individual output pin open-drain enable/disable
- Individual input pin weak pull-up enable/disable
- Monitor selective inputs and generate interrupt when change in pin state is detected
- Operation during Sleep and Idle modes
- Fast bit manipulation using CLR, SET and INV registers

Figure 12-1 illustrates a block diagram of a typical multiplexed I/O port.

FIGURE 12-1: BLOCK DIAGRAM OF A TYPICAL MULTIPLEXED PORT STRUCTURE

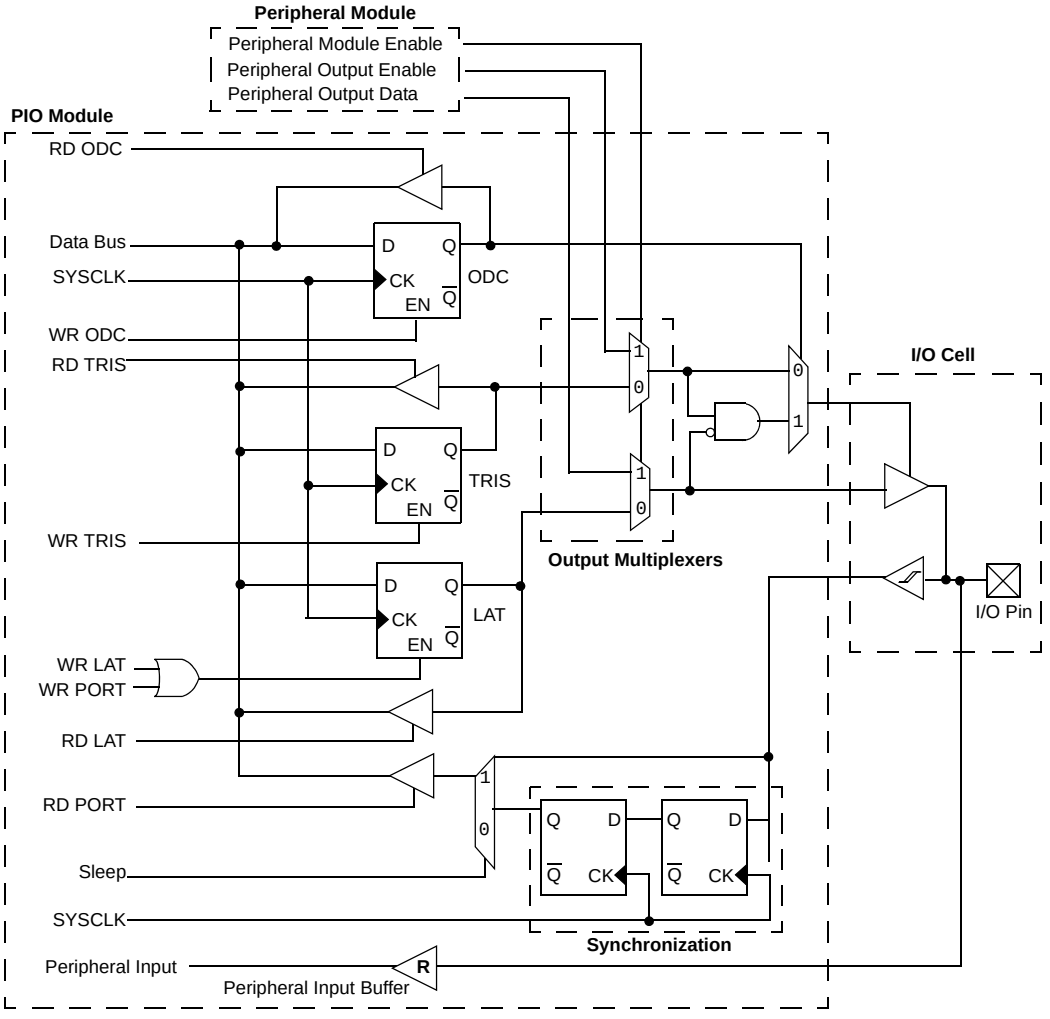

Legend: R = Peripheral input buffer types may vary. Refer to Table 1-1 for peripheral details.

Note: This block diagram is a general representation of a shared port/peripheral structure is only for illustration purposes. The actual structure for any specific port/peripheral combination may be different than it is shown here.

12.1 Parallel I/O (PIO) Ports

All port pins have three registers (TRIS, LAT and PORT) that are directly associated with their operation.

TRIS is a Data Direction or Tri-State Control register that determines whether a digital pin is an input or an output. Setting a TRISx register bit = 1, configures the corresponding I/O pin as an input; setting a TRISx register bit = 0, configures the corresponding I/O pin as an output. All port I/O pins are defined as inputs after a device Reset. Certain I/O pins are shared with analog peripherals and default to analog inputs after a device Reset.

PORT is a register used to read the current state of the signal applied to the port I/O pins. Writing to a PORTx register performs a write to the port's latch, LATx register, latching the data to the port's I/O pins.

LAT is a register used to write data to the port I/O pins. The LATx Latch register holds the data written to either the LATx or PORTx registers. Reading the LATx Latch register reads the last value written to the corresponding PORT or Latch register.

Not all port I/O pins are implemented on some devices, therefore, the corresponding PORTx, LATx and TRISx register bits will read as zeros.

12.1.1 CLR, SET AND INV REGISTERS

Every I/O module register has a corresponding Clear (CLR), Set (SET) and Invert (INV) register designed to provide fast atomic bit manipulations. As the name of the register implies, a value written to a SET, CLR or INV register effectively performs the implied operation, but only on the corresponding base register and only bits specified as '1' are modified. Bits specified as '0' are not modified.

Reading SET, CLR and INV registers returns undefined values. To see the affects of a write operation to a SET, CLR or INV register, the base register must be read.

Note:	Using a PORTxINV register to toggle a bit is recommended because the operation is performed in hardware atomically, using fewer instructions, as compared to the traditional read-modify-write method, as follows: `PORTC ^ = 0x0001;`

12.1.2 DIGITAL INPUTS

Pins are configured as digital inputs by setting the corresponding TRIS register bits = 1. When configured as inputs, they are either TTL buffers or Schmitt Triggers. Several digital pins share functionality with analog inputs and default to the analog inputs at POR. Setting the corresponding bit in the AD1PCFG register = 1 enables the pin as a digital pin.

The maximum input voltage allowed on the input pins is the same as the maximum V_{IH} specification. Refer to **Section 31.0 "Electrical Characteristics"** for V_{IH} specification details.

Note:	Analog levels on any pin that is defined as a digital input (including the ANx pins) may cause the input buffer to consume current that exceeds the device specifications.

12.1.3 ANALOG INPUTS

Certain pins can be configured as analog inputs used by the ADC and comparator modules. Setting the corresponding bits in the AD1PCFG register = 0 enables the pin as an analog input pin and must have the corresponding TRIS bit set = 1 (input). If the TRIS bit is cleared = 0 (output), the digital output level (V_{OH} or V_{OL}) will be converted. Any time a port I/O pin is configured as analog, its digital input is disabled and the corresponding PORTx register bit will read '0'. The AD1PCFG register has a default value of 0x0000; therefore, all pins that share ANx functions are analog (not digital) by default.

12.1.4 DIGITAL OUTPUTS

Pins are configured as digital outputs by setting the corresponding TRIS register bits = 0. When configured as digital outputs, these pins are CMOS drivers or can be configured as open-drain outputs by setting the corresponding bits in the Open-Drain Configuration (ODCx) register.

The open-drain feature allows generation of outputs higher than V_{DD} (e.g., 5V) on any desired 5V tolerant pins by using external pull-up resistors. The maximum open-drain voltage allowed is the same as the maximum V_{IH} specification.

See the **"Pin Diagrams"** section for the available pins and their functionality.

12.1.5 ANALOG OUTPUTS

Certain pins can be configured as analog outputs, such as the CV_{REF} output voltage used by the comparator module. Configuring the comparator reference module to provide this output will present the analog output voltage on the pin, independent of the TRIS register setting for the corresponding pin.

12.1.6 INPUT CHANGE NOTIFICATION

The input change notification function of the I/O ports (CNx) allows devices to generate interrupt requests in response to change-of-state on selected pin.

Each CNx pin also has a weak pull-up, which acts as a current source connected to the pin. The pull-ups are enabled by setting the corresponding bit in the CNPUE register.

© 2009-2013 Microchip Technology Inc.

12.2 Control Register

REGISTER 12-1: CNCON: CHANGE NOTICE CONTROL REGISTER

Bit Range	Bit 31/23/15/7	Bit 30/22/14/6	Bit 29/21/13/5	Bit 28/20/12/4	Bit 27/19/11/3	Bit 26/18/10/2	Bit 25/17/9/1	Bit 24/16/8/0
31:24	U-0	U-0	U-0	U-0	U-0	U-0	U-0	U-0
	—	—	—	—	—	—	—	—
23:16	U-0	U-0	U-0	U-0	U-0	U-0	U-0	U-0
	—	—	—	—	—	—	—	—
15:8	R/W-0	U-0	R/W-0	U-0	U-0	U-0	U-0	U-0
	ON	—	SIDL	—	—	—	—	—
7:0	U-0	U-0	U-0	U-0	U-0	U-0	U-0	U-0
	—	—	—	—	—	—	—	—

Legend:			
R = Readable bit	W = Writable bit	U = Unimplemented bit, read as ‘0’	
-n = Value at POR	‘1’ = Bit is set	‘0’ = Bit is cleared	x = Bit is unknown

bit 31-16 **Unimplemented:** Read as ‘0’

bit 15 **ON:** Change Notice (CN) Control ON bit
1 = CN is enabled
0 = CN is disabled

bit 14 **Unimplemented:** Read as ‘0’

bit 13 **SIDL:** Stop in Idle Control bit
1 = Idle mode halts CN operation
0 = Idle mode does not affect CN operation

bit 12-0 **Unimplemented:** Read as ‘0’

NOTES:

© 2009-2013 Microchip Technology Inc.

13.0 TIMER1

Note 1: This data sheet summarizes the features of the PIC32MX5XX/6XX/7XX family of devices. It is not intended to be a comprehensive reference source. To complement the information in this data sheet, refer to **Section 14. "Timers"** (DS60001105) in the *"PIC32 Family Reference Manual"*, which is available from the Microchip web site (www.microchip.com/PIC32).

2: Some registers and associated bits described in this section may not be available on all devices. Refer to **Section 4.0 "Memory Organization"** in this data sheet for device-specific register and bit information.

This family of PIC32 devices features one synchronous/asynchronous 16-bit timer that can operate as a free-running interval timer for various timing applications and counting external events. This timer can also be used with the low-power Secondary Oscillator (SOSC) for Real-Time Clock (RTC) applications. The following modes are supported:

- Synchronous Internal Timer
- Synchronous Internal Gated Timer
- Synchronous External Timer
- Asynchronous External Timer

13.1 Additional Supported Features

- Selectable clock prescaler
- Timer operation during Idle and Sleep mode
- Fast bit manipulation using CLR, SET and INV registers
- Asynchronous mode can be used with the SOSC to function as a Real-Time Clock (RTC)

A simplified block diagram of the Timer1 module is illustrated in Figure 13-1.

FIGURE 13-1: TIMER1 BLOCK DIAGRAM

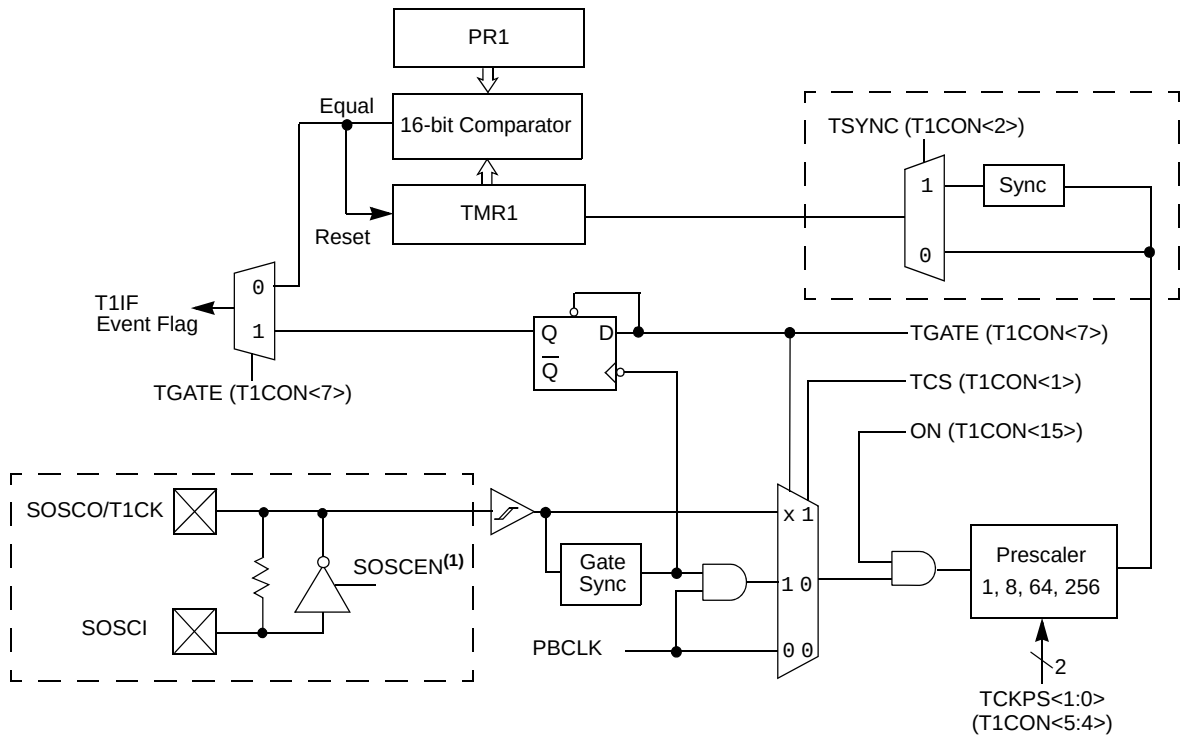

Note 1: The default state of the SOSCEN (OSCCON<1>) during a device Reset is controlled by the FSOSCEN bit in Configuration Word, DEVCFG1.

13.2 Control Register

REGISTER 13-1: T1CON: TYPE A TIMER CONTROL REGISTER

Bit Range	Bit 31/23/15/7	Bit 30/22/14/6	Bit 29/21/13/5	Bit 28/20/12/4	Bit 27/19/11/3	Bit 26/18/10/2	Bit 25/17/9/1	Bit 24/16/8/0
31:24	U-0	U-0	U-0	U-0	U-0	U-0	U-0	U-0
	—	—	—	—	—	—	—	—
23:16	U-0	U-0	U-0	U-0	U-0	U-0	U-0	U-0
	—	—	—	—	—	—	—	—
15:8	R/W-0	U-0	R/W-0	R/W-0	R-0	U-0	U-0	U-0
	ON(1)	—	SIDL	TWDIS	TWIP	—	—	—
7:0	R/W-0	U-0	R/W-0	R/W-0	U-0	R/W-0	R/W-0	U-0
	TGATE	—	TCKPS<1:0>		—	TSYNC	TCS	—

Legend:			
R = Readable bit	W = Writable bit	U = Unimplemented bit, read as ‘0’	
-n = Value at POR	‘1’ = Bit is set	‘0’ = Bit is cleared	x = Bit is unknown

bit 31-16 **Unimplemented:** Read as ‘0’

bit 15 **ON:** Timer On bit(1)
1 = Timer is enabled
0 = Timer is disabled

bit 14 **Unimplemented:** Read as ‘0’

bit 13 **SIDL:** Stop in Idle Mode bit
1 = Discontinue operation when device enters Idle mode
0 = Continue operation when device is in Idle mode

bit 12 **TWDIS:** Asynchronous Timer Write Disable bit
1 = Writes to TMR1 are ignored until pending write operation completes
0 = Back-to-back writes are enabled (Legacy Asynchronous Timer functionality)

bit 11 **TWIP:** Asynchronous Timer Write in Progress bit
In Asynchronous Timer mode:
1 = Asynchronous write to TMR1 register in progress
0 = Asynchronous write to TMR1 register complete
In Synchronous Timer mode:
This bit is read as ‘0’.

bit 10-8 **Unimplemented:** Read as ‘0’

bit 7 **TGATE:** Timer Gated Time Accumulation Enable bit
When TCS = 1:
This bit is ignored.
When TCS = 0:
1 = Gated time accumulation is enabled
0 = Gated time accumulation is disabled

bit 6 **Unimplemented:** Read as ‘0’

Note 1: When using the 1:1 PBCLK divisor, the user’s software should not read/write the peripheral SFRs in the SYSCLK cycle immediately following the instruction that clears the module’s ON bit.

© 2009-2013 Microchip Technology Inc.

REGISTER 13-1: T1CON: TYPE A TIMER CONTROL REGISTER (CONTINUED)

bit 5-4 **TCKPS<1:0>:** Timer Input Clock Prescale Select bits
11 = 1:256 prescale value
10 = 1:64 prescale value
01 = 1:8 prescale value
00 = 1:1 prescale value

bit 3 **Unimplemented:** Read as '0'

bit 2 **TSYNC:** Timer External Clock Input Synchronization Selection bit
When TCS = 1:
1 = External clock input is synchronized
0 = External clock input is not synchronized
When TCS = 0:
This bit is ignored.

bit 1 **TCS:** Timer Clock Source Select bit
1 = External clock from TxCKI pin
0 = Internal peripheral clock

bit 0 **Unimplemented:** Read as '0'

Note 1: When using the 1:1 PBCLK divisor, the user's software should not read/write the peripheral SFRs in the SYSCLK cycle immediately following the instruction that clears the module's ON bit.

NOTES:

© 2009-2013 Microchip Technology Inc.

14.0 TIMER2/3, TIMER4/5

Note 1: This data sheet summarizes the features of the PIC32MX5XX/6XX/7XX family of devices. It is not intended to be a comprehensive reference source. To complement the information in this data sheet, refer to **Section 14. "Timers"** (DS60001105) of the *"PIC32 Family Reference Manual"*, which is available from the Microchip web site (www.microchip.com/PIC32).

2: Some registers and associated bits described in this section may not be available on all devices. Refer to **Section 4.0 "Memory Organization"** in this data sheet for device-specific register and bit information.

This family of PIC32 devices features four synchronous 16-bit timers (default) that can operate as a free-running interval timer for various timing applications and counting external events. The following modes are supported:

- Synchronous Internal 16-bit Timer
- Synchronous Internal 16-bit Gated Timer
- Synchronous External 16-bit Timer

Two 32-bit synchronous timers are available by combining Timer2 with Timer3 and Timer4 with Timer5. The 32-bit timers can operate in three modes:

- Synchronous Internal 32-bit Timer
- Synchronous Internal 32-bit Gated Timer
- Synchronous External 32-bit Timer

Note: In this chapter, references to registers, TxCON, TMRx and PRx, use 'x' to represent Timer2 through Timer5 in 16-bit modes. In 32-bit modes, 'x' represents Timer2 or Timer4; 'y' represents Timer3 or Timer5.

14.1 Additional Supported Features

- Selectable clock prescaler
- Timers operational during CPU idle
- Time base for Input Capture and Output Compare modules (only Timer2 and Timer3)
- ADC event trigger (only Timer3)
- Fast bit manipulation using CLR, SET and INV registers

FIGURE 14-1: TIMER2/3 AND TIMER4/5 BLOCK DIAGRAM (16-BIT)

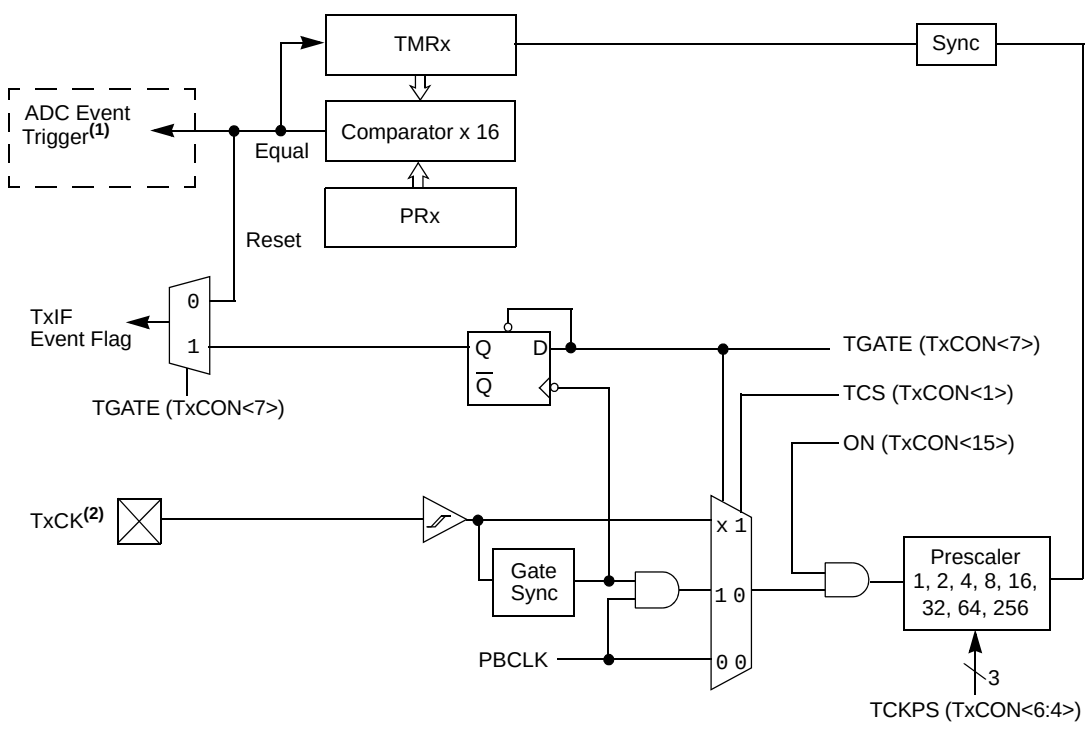

Note 1: ADC event trigger is only available on Timer3.

2: TxCK pins are not available on 64-pin devices.

FIGURE 14-2: TIMER2/3 AND TIMER4/5 BLOCK DIAGRAM (32-BIT)

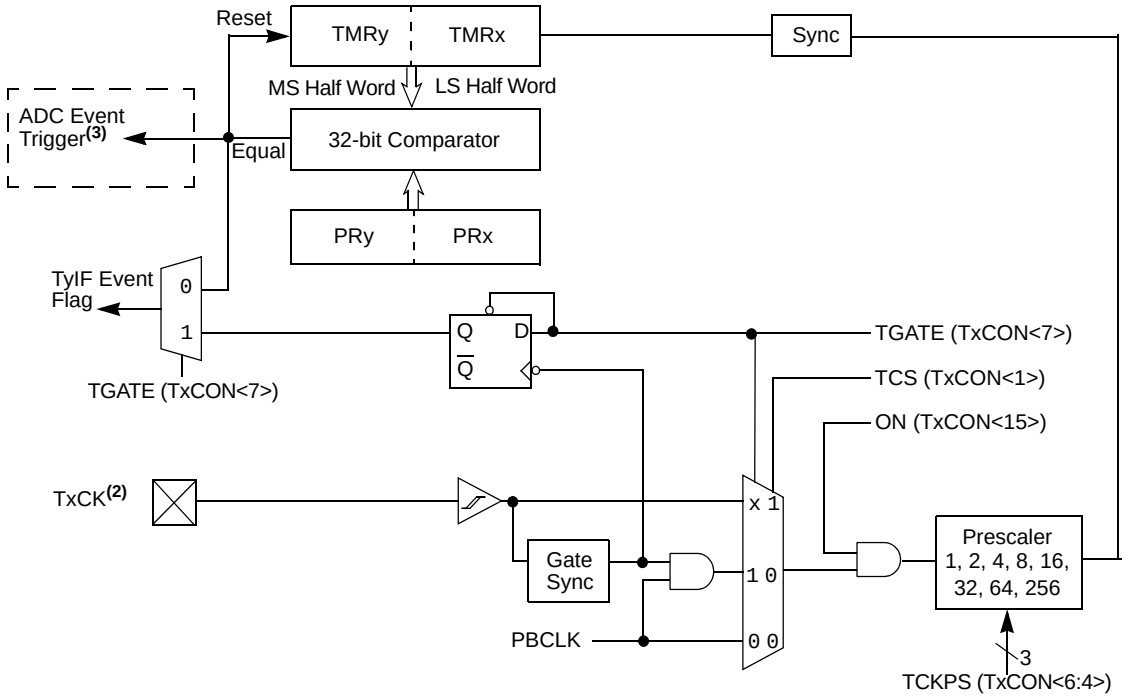

Note 1: In this diagram, the use of ‘x’ in registers, TxCON, TMRx, PRx and TxCK, refers to either Timer2 or Timer4; the use of ‘y’ in registers, TyCON, TMRy, PRy, TyIF, refers to either Timer3 or Timer5.

2: TxCK pins are not available on 64-pin devices.

3: ADC event trigger is only available on the Timer2/3 pair.

© 2009-2013 Microchip Technology Inc.

14.2 Control Register

REGISTER 14-1: TXCON: TYPE B TIMER CONTROL REGISTER

Bit Range	Bit 31/23/15/7	Bit 30/22/14/6	Bit 29/21/13/5	Bit 28/20/12/4	Bit 27/19/11/3	Bit 26/18/10/2	Bit 25/17/9/1	Bit 24/16/8/0
31:24	U-0	U-0	U-0	U-0	U-0	U-0	U-0	U-0
	—	—	—	—	—	—	—	—
23:16	U-0	U-0	U-0	U-0	U-0	U-0	U-0	U-0
	—	—	—	—	—	—	—	—
15:8	R/W-0	U-0	R/W-0	U-0	U-0	U-0	U-0	U-0
	ON(1,3)	—	SIDL(4)	—	—	—	—	—
7:0	R/W-0	R/W-0	R/W-0	R/W-0	R/W-0	U-0	R/W-0	U-0
	TGATE(3)	TCKPS<2:0>(3)			T32(2)	—	TCS(3)	—

Legend:			
R = Readable bit	W = Writable bit	U = Unimplemented bit, read as ‘0’	
-n = Value at POR	‘1’ = Bit is set	‘0’ = Bit is cleared	x = Bit is unknown

bit 31-16 **Unimplemented:** Read as ‘0’

bit 15 **ON:** Timer On bit(1,3)
1 = Module is enabled
0 = Module is disabled

bit 14 **Unimplemented:** Read as ‘0’

bit 13 **SIDL:** Stop in Idle Mode bit(4)
1 = Discontinue operation when device enters Idle mode
0 = Continue operation when device is in Idle mode

bit 12-8 **Unimplemented:** Read as ‘0’

bit 7 **TGATE:** Timer Gated Time Accumulation Enable bit(3)
When TCS = 1:
This bit is ignored and is read as ‘0’.
When TCS = 0:
1 = Gated time accumulation is enabled
0 = Gated time accumulation is disabled

bit 6-4 **TCKPS<2:0>:** Timer Input Clock Prescale Select bits(3)
111 = 1:256 prescale value
110 = 1:64 prescale value
101 = 1:32 prescale value
100 = 1:16 prescale value
011 = 1:8 prescale value
010 = 1:4 prescale value
001 = 1:2 prescale value
000 = 1:1 prescale value

Note 1: When using the 1:1 PBCLK divisor, the user’s software should not read/write the peripheral SFRs in the SYSCLK cycle immediately following the instruction that clears the module’s ON bit.

2: This bit is only available on even numbered timers (Timer2 and Timer4).

3: While operating in 32-bit mode, this bit has no effect for odd numbered timers (Timer1, Timer3, and Timer5). All timer functions are set through the even numbered timers.

4: While operating in 32-bit mode, this bit must be cleared on odd numbered timers to enable the 32-bit timer in Idle mode.

REGISTER 14-1: TXCON: TYPE B TIMER CONTROL REGISTER (CONTINUED)

bit 3 **T32:** 32-Bit Timer Mode Select bit(2)

1 = Odd numbered and even numbered timers form a 32-bit timer
0 = Odd numbered and even numbered timers form a separate 16-bit timer

bit 2 **Unimplemented:** Read as '0'

bit 1 **TCS:** Timer Clock Source Select bit(3)

1 = External clock from TxCK pin
0 = Internal peripheral clock

bit 0 **Unimplemented:** Read as '0'

Note 1: When using the 1:1 PBCLK divisor, the user's software should not read/write the peripheral SFRs in the SYSCLK cycle immediately following the instruction that clears the module's ON bit.

2: This bit is only available on even numbered timers (Timer2 and Timer4).

3: While operating in 32-bit mode, this bit has no effect for odd numbered timers (Timer1, Timer3, and Timer5). All timer functions are set through the even numbered timers.

4: While operating in 32-bit mode, this bit must be cleared on odd numbered timers to enable the 32-bit timer in Idle mode.

© 2009-2013 Microchip Technology Inc.

15.0 INPUT CAPTURE

Note 1: This data sheet summarizes the features of the PIC32MX5XX/6XX/7XX family of devices. It is not intended to be a comprehensive reference source. To complement the information in this data sheet, refer to **Section 15. "Input Capture"** (DS60001122) of the *"PIC32 Family Reference Manual"*, which is available from the Microchip web site (www.microchip.com/PIC32).

2: Some registers and associated bits described in this section may not be available on all devices. Refer to **Section 4.0 "Memory Organization"** in this data sheet for device-specific register and bit information.

The Input Capture module is useful in applications requiring frequency (period) and pulse measurement.

The Input Capture module captures the 16-bit or 32-bit value of the selected Time Base registers when an event occurs at the ICx pin. The following events cause capture events:

- Simple capture event modes:
  - Capture timer value on every falling edge of input at ICx pin
  - Capture timer value on every rising edge of input at ICx pin
- Capture timer value on every edge (rising and falling)
- Capture timer value on every edge (rising and falling), specified edge first.
- Prescaler capture event modes:
  - Capture timer value on every 4th rising edge of input at ICx pin
  - Capture timer value on every 16th rising edge of input at ICx pin

Each input capture channel can select between one of two 16-bit timers (Timer2 or Timer3) for the time base, or two 16-bit timers (Timer2 and Timer3) together to form a 32-bit timer. The selected timer can use either an internal or external clock.

Other operational features include:

- Device wake-up from capture pin during Sleep and Idle modes
- Interrupt on input capture event
- 4-word FIFO buffer for capture values
  Interrupt optionally generated after 1, 2, 3 or 4 buffer locations are filled
- Input Capture module can also be used to provide additional sources of external interrupts

FIGURE 15-1: INPUT CAPTURE BLOCK DIAGRAM

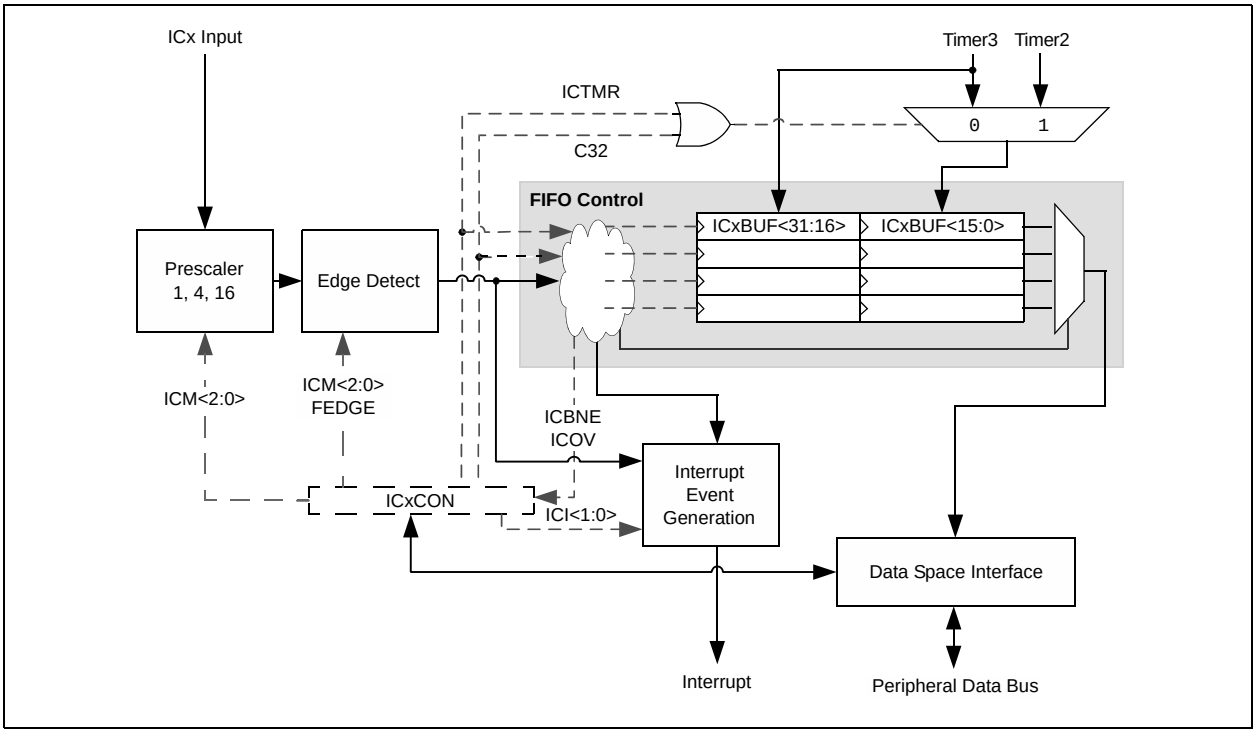

15.1 Control Register

REGISTER 15-1: ICxCON: INPUT CAPTURE 'x' CONTROL REGISTER

Bit Range	Bit 31/23/15/7	Bit 30/22/14/6	Bit 29/21/13/5	Bit 28/20/12/4	Bit 27/19/11/3	Bit 26/18/10/2	Bit 25/17/9/1	Bit 24/16/8/0
31:24	U-0	U-0	U-0	U-0	U-0	U-0	U-0	U-0
	—	—	—	—	—	—	—	—
23:16	U-0	U-0	U-0	U-0	U-0	U-0	U-0	U-0
	—	—	—	—	—	—	—	—
15:8	R/W-0	U-0	R/W-0	U-0	U-0	U-0	R/W-0	R/W-0
	ON(1)	—	SIDL	—	—	—	FEDGE	C32
7:0	R/W-0	R/W-0	R/W-0	R-0	R-0	R/W-0	R/W-0	R/W-0
	ICTMR	ICI<1:0>		ICOV	ICBNE	ICM<2:0>		

Legend:			
R = Readable bit	W = Writable bit	U = Unimplemented bit, read as '0'	
-n = Value at POR	'1' = Bit is set	'0' = Bit is cleared	x = Bit is unknown

bit 31-16 **Unimplemented:** Read as '0'

bit 15 **ON:** Input Capture Module Enable bit(1)
1 = Module enabled
0 = Disable and reset module, disable clocks, disable interrupt generation and allow SFR modifications

bit 14 **Unimplemented:** Read as '0'

bit 13 **SIDL:** Stop in Idle Control bit
1 = Halt in Idle mode
0 = Continue to operate in Idle mode

bit 12-10 **Unimplemented:** Read as '0'

bit 9 **FEDGE:** First Capture Edge Select bit (only used in mode 6, ICM<2:0> = 110)
1 = Capture rising edge first
0 = Capture falling edge first

bit 8 **C32:** 32-bit Capture Select bit
1 = 32-bit timer resource capture
0 = 16-bit timer resource capture

bit 7 **ICTMR:** Timer Select bit (Does not affect timer selection when C32 (ICxCON<8>) is '1')
1 = Timer2 is the counter source for capture
0 = Timer3 is the counter source for capture

bit 6-5 **ICI<1:0>:** Interrupt Control bits
11 = Interrupt on every fourth capture event
10 = Interrupt on every third capture event
01 = Interrupt on every second capture event
00 = Interrupt on every capture event

bit 4 **ICOV:** Input Capture Overflow Status Flag bit (read-only)
1 = Input capture overflow occurred
0 = No input capture overflow occurred

bit 3 **ICBNE:** Input Capture Buffer Not Empty Status bit (read-only)
1 = Input capture buffer is not empty; at least one more capture value can be read
0 = Input capture buffer is empty

Note 1: When using the 1:1 PBCLK divisor, the user's software should not read/write the peripheral's SFRs in the SYSCLK cycle immediately following the instruction that clears the module's ON bit.

© 2009-2013 Microchip Technology Inc.

REGISTER 15-1: ICxCON: INPUT CAPTURE 'x' CONTROL REGISTER (CONTINUED)

bit 2-0 **ICM<2:0>:** Input Capture Mode Select bits

111 = Interrupt-Only mode (only supported while in Sleep mode or Idle mode)
110 = Simple Capture Event mode – every edge, specified edge first and every edge thereafter
101 = Prescaled Capture Event mode – every sixteenth rising edge
100 = Prescaled Capture Event mode – every fourth rising edge
011 = Simple Capture Event mode – every rising edge
010 = Simple Capture Event mode – every falling edge
001 = Edge Detect mode – every edge (rising and falling)
000 = Input Capture module is disabled

Note 1: When using the 1:1 PBCLK divisor, the user's software should not read/write the peripheral's SFRs in the SYSCLK cycle immediately following the instruction that clears the module's ON bit.

NOTES:

© 2009-2013 Microchip Technology Inc.

16.0 OUTPUT COMPARE

Note 1: This data sheet summarizes the features of the PIC32MX5XX/6XX/7XX family of devices. It is not intended to be a comprehensive reference source. To complement the information in this data sheet, refer to **Section 16. "Output Compare"** (DS60001111) in the *"PIC32 Family Reference Manual"*, which is available from the Microchip web site (www.microchip.com/PIC32).

2: Some registers and associated bits described in this section may not be available on all devices. Refer to **Section 4.0 "Memory Organization"** in this data sheet for device-specific register and bit information.

The Output Compare module is used to generate a single pulse or a series of pulses in response to selected time base events. For all modes of operation, the Output Compare module compares the values stored in the OCxR and/or the OCxRS registers to the value in the selected timer. When a match occurs, the Output Compare module generates an event based on the selected mode of operation.

Some of the key features of the Output Compare module are:

- Multiple Output Compare modules in a device
- Programmable interrupt generation on compare event
- Single and Dual Compare modes
- Single and continuous output pulse generation
- Pulse-Width Modulation (PWM) mode
- Hardware-based PWM Fault detection and automatic output disable
- Programmable selection of 16-bit or 32-bit time bases
- Can operate from either of two available 16-bit time bases or a single 32-bit time base

FIGURE 16-1: OUTPUT COMPARE MODULE BLOCK DIAGRAM

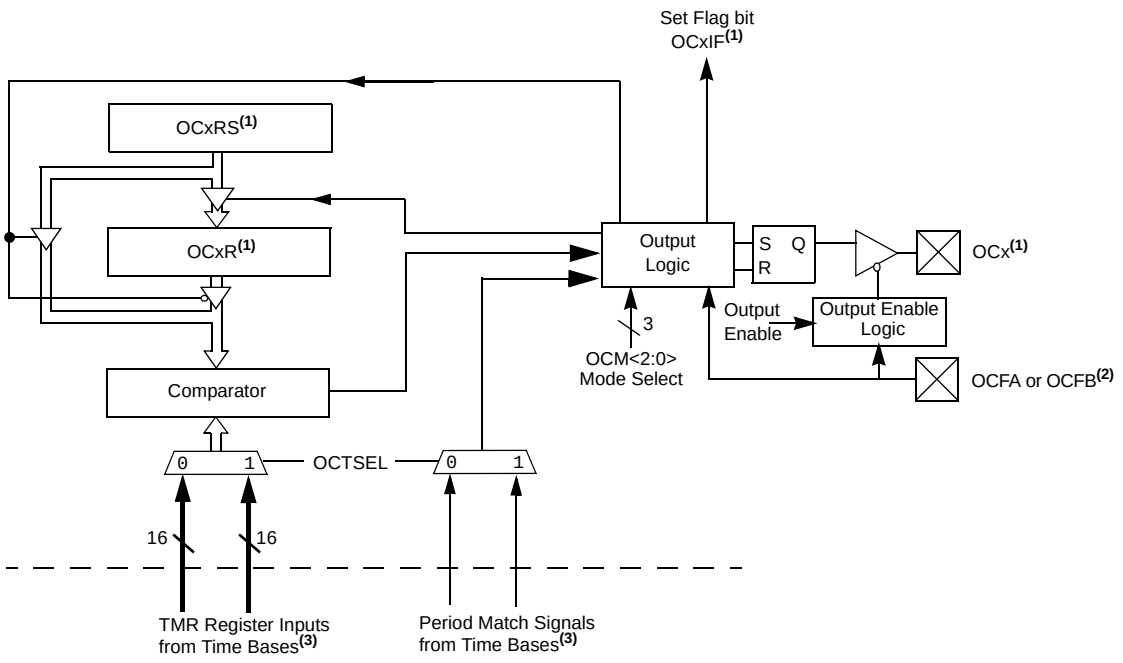

Note 1: Where 'x' is shown, reference is made to the registers associated with the respective output compare channels, 1 through 5.

2: The OCFA pin controls the OC1-OC4 channels. The OCFB pin controls the OC5 channel.

3: Each output compare channel can use one of two selectable 16-bit time bases or a single 32-bit timer base.

16.1 Control Register

REGISTER 16-1: OCxCON: OUTPUT COMPARE ‘x’ CONTROL REGISTER

Bit Range	Bit 31/23/15/7	Bit 30/22/14/6	Bit 29/21/13/5	Bit 28/20/12/4	Bit 27/19/11/3	Bit 26/18/10/2	Bit 25/17/9/1	Bit 24/16/8/0
31:24	U-0	U-0	U-0	U-0	U-0	U-0	U-0	U-0
	—	—	—	—	—	—	—	—
23:16	U-0	U-0	U-0	U-0	U-0	U-0	U-0	U-0
	—	—	—	—	—	—	—	—
15:8	R/W-0	U-0	R/W-0	U-0	U-0	U-0	U-0	U-0
	ON(1)	—	SIDL	—	—	—	—	—
7:0	U-0	U-0	R/W-0	R-0	R/W-0	R/W-0	R/W-0	R/W-0
	—	—	OC32	OCFLT(2)	OCTSEL	OCM<2:0>		

Legend:			
R = Readable bit	W = Writable bit	U = Unimplemented bit, read as ‘0’	
-n = Value at POR	‘1’ = Bit is set	‘0’ = Bit is cleared	x = Bit is unknown

bit 31-16 **Unimplemented:** Read as ‘0’

bit 15 **ON:** Output Compare Module On bit(1)
- 1 = Output Compare module is enabled
- 0 = Output Compare module is disabled

bit 14 **Unimplemented:** Read as ‘0’

bit 13 **SIDL:** Stop in Idle Mode bit
- 1 = Discontinue operation when CPU enters Idle mode
- 0 = Continue operation when CPU is in Idle mode

bit 12-6 **Unimplemented:** Read as ‘0’

bit 5 **OC32:** 32-bit Compare Mode bit
- 1 = OCxR<31:0> and/or OCxRS<31:0> are used for comparisions to the 32-bit timer source
- 0 = OCxR<15:0> and OCxRS<15:0> are used for comparisons to the 16-bit timer source

bit 4 **OCFLT:** PWM Fault Condition Status bit(2)
- 1 = PWM Fault condition has occurred (only cleared in hardware)
- 0 = PWM Fault condition has not occurred

bit 3 **OCTSEL:** Output Compare Timer Select bit
- 1 = Timer3 is the clock source for this Output Compare module
- 0 = Timer2 is the clock source for this Output Compare module

bit 2-0 **OCM<2:0>:** Output Compare Mode Select bits
- 111 = PWM mode on OCx; Fault pin enabled
- 110 = PWM mode on OCx; Fault pin disabled
- 101 = Initialize OCx pin low; generate continuous output pulses on OCx pin
- 100 = Initialize OCx pin low; generate single output pulse on OCx pin
- 011 = Compare event toggles OCx pin
- 010 = Initialize OCx pin high; compare event forces OCx pin low
- 001 = Initialize OCx pin low; compare event forces OCx pin high
- 000 = Output compare peripheral is disabled but continues to draw current

Note 1: When using the 1:1 PBCLK divisor, the user’s software should not read/write the peripheral’s SFRs in the SYSCLK cycle immediately following the instruction that clears the module’s ON bit.

2: This bit is only used when OCM<2:0> = 111. It is read as ‘0’ in all other modes.

© 2009-2013 Microchip Technology Inc.

17.0 SERIAL PERIPHERAL INTERFACE (SPI)

Note 1: This data sheet summarizes the features of the PIC32MX5XX/6XX/7XX family of devices. It is not intended to be a comprehensive reference source. To complement the information in this data sheet, refer to **Section 23. "Serial Peripheral Interface (SPI)"** (DS60001106) in the *"PIC32 Family Reference Manual"*, which is available from the Microchip web site (www.microchip.com/PIC32).

2: Some registers and associated bits described in this section may not be available on all devices. Refer to **Section 4.0 "Memory Organization"** in this data sheet for device-specific register and bit information.

The SPI module is a synchronous serial interface that is useful for communicating with external peripherals and other microcontroller devices. These peripheral devices may be Serial EEPROMs, Shift registers, display drivers, Analog-to-Digital Converters, etc. The PIC32 SPI module is compatible with Motorola® SPI and SIOP interfaces.

Some of the key features of this module include:

- Master mode and Slave mode support
- Four different clock formats
- Enhanced Framed SPI protocol support
- User-configurable 8-bit, 16-bit and 32-bit data width
- Separate SPI FIFO buffers for receive and transmit
  - FIFO buffers act as 4/8/16-level deep FIFOs based on 32/16/8-bit data width
- Programmable interrupt event on every 8-bit, 16-bit and 32-bit data transfer
- Operation during Sleep and Idle modes
- Fast bit manipulation using CLR, SET and INV registers

FIGURE 17-1: SPI MODULE BLOCK DIAGRAM

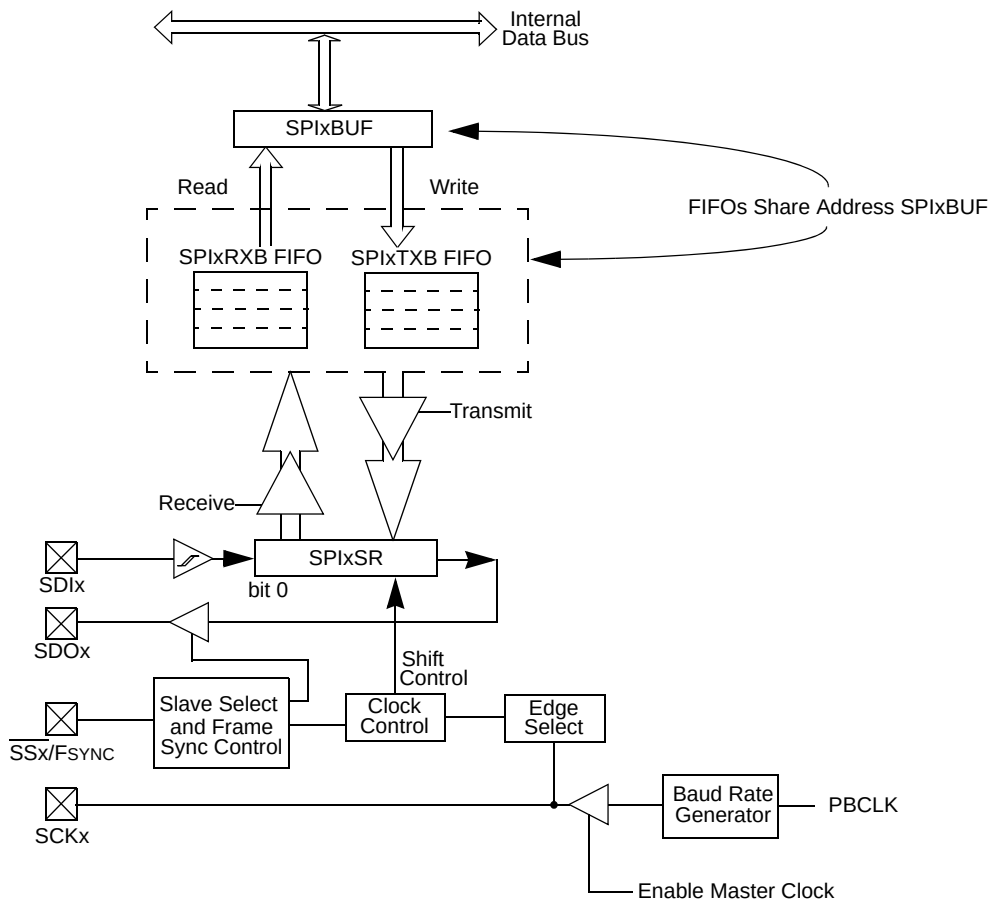

Note: Access SPIxTXB and SPIxRXB FIFOs via SPIxBUF register.

17.1 Control Registers

REGISTER 17-1: SPIxCON: SPI CONTROL REGISTER

Bit Range	Bit 31/23/15/7	Bit 30/22/14/6	Bit 29/21/13/5	Bit 28/20/12/4	Bit 27/19/11/3	Bit 26/18/10/2	Bit 25/17/9/1	Bit 24/16/8/0
31:24	R/W-0	R/W-0	R/W-0	R/W-0	R/W-0	R/W-0	R/W-0	R/W-0
	FRMEN	FRMSYNC	FRMPOL	MSSEN	FRMSYPW	FRMCNT<2:0>		
23:16	U-0	U-0	U-0	U-0	U-0	U-0	R/W-0	R/W-0
	—	—	—	—	—	—	SPIFE	ENHBUF(2)
15:8	R/W-0	U-0	R/W-0	R/W-0	R/W-0	R/W-0	R/W-0	R/W-0
	ON(1)	—	SIDL	DISSDO	MODE32	MODE16	SMP	CKE(3)
7:0	R/W-0	R/W-0	R/W-0	U-0	R/W-0	R/W-0	R/W-0	R/W-0
	SSEN	CKP	MSTEN	—	STXISEL<1:0>		SRXISEL<1:0>	

Legend:			
R = Readable bit	W = Writable bit	U = Unimplemented bit, read as ‘0’	
-n = Value at POR	‘1’ = Bit is set	‘0’ = Bit is cleared	x = Bit is unknown

bit 31 **FRMEN:** Framed SPI Support bit
1 = Framed SPI support is enabled ($\overline{SSx}$ pin used as FSYNC input/output)
0 = Framed SPI support is disabled

bit 30 **FRMSYNC:** Frame Sync Pulse Direction Control on $\overline{SSx}$ pin bit (only Framed SPI mode)
1 = Frame sync pulse input (Slave mode)
0 = Frame sync pulse output (Master mode)

bit 29 **FRMPOL:** Frame Sync Polarity bit (only Framed SPI mode)
1 = Frame pulse is active-high
0 = Frame pulse is active-low

bit 28 **MSSEN:** Master Mode Slave Select Enable bit
1 = Slave select SPI support enabled. The $\overline{SS}$ pin is automatically driven during transmission in Master mode. Polarity is determined by the FRMPOL bit.
0 = Slave select SPI support is disabled.

bit 27 **FRMSYPW:** Frame Sync Pulse Width bit
1 = Frame sync pulse is one character wide
0 = Frame sync pulse is one clock wide

bit 26-24 **FRMCNT<2:0>:** Frame Sync Pulse Counter bits. Controls the number of data characters transmitted per pulse. This bit is only valid in Framed Sync mode.
111 = Reserved
110 = Reserved
101 = Generate a frame sync pulse on every 32 data characters
100 = Generate a frame sync pulse on every 16 data characters
011 = Generate a frame sync pulse on every 8 data characters
010 = Generate a frame sync pulse on every 4 data characters
001 = Generate a frame sync pulse on every 2 data characters
000 = Generate a frame sync pulse on every data character

bit 23-18 **Unimplemented:** Read as ‘0’

bit 17 **SPIFE:** Frame Sync Pulse Edge Select bit (only Framed SPI mode)
1 = Frame synchronization pulse coincides with the first bit clock
0 = Frame synchronization pulse precedes the first bit clock

Note 1: When using the 1:1 PBCLK divisor, the user’s software should not read or write the peripheral’s SFRs in the SYSCLK cycle immediately following the instruction that clears the module’s ON bit.
2: This bit can only be written when the ON bit = 0.
3: This bit is not used in the Framed SPI mode. The user should program this bit to ‘0’ for the Framed SPI mode (FRMEN = 1).

© 2009-2013 Microchip Technology Inc.

REGISTER 17-1: SPIxCON: SPI CONTROL REGISTER (CONTINUED)

bit 16 **ENHBUF:** Enhanced Buffer Enable bit[2]
1 = Enhanced Buffer mode is enabled
0 = Enhanced Buffer mode is disabled

bit 15 **ON:** SPI Peripheral On bit[1]
1 = SPI Peripheral is enabled
0 = SPI Peripheral is disabled

bit 14 **Unimplemented:** Read as '0'

bit 13 **SIDL:** Stop in Idle Mode bit
1 = Discontinue operation when CPU enters in Idle mode
0 = Continue operation in Idle mode

bit 12 **DISSDO:** Disable SDOx pin bit
1 = SDOx pin is not used by the module (pin is controlled by associated PORT register)
0 = SDOx pin is controlled by the module

bit 11-10 **MODE<32,16>:** 32/16-Bit Communication Select bits

MODE32	MODE16	Communication
1	x	32-bit
0	1	16-bit
0	0	8-bit

bit 9 **SMP:** SPI Data Input Sample Phase bit
Master mode (MSTEN = 1):
1 = Input data sampled at end of data output time
0 = Input data sampled at middle of data output time

Slave mode (MSTEN = 0):
SMP value is ignored when SPI is used in Slave mode. The module always uses SMP = 0.

bit 8 **CKE:** SPI Clock Edge Select bit[3]
1 = Serial output data changes on transition from active clock state to Idle clock state (see CKP bit)
0 = Serial output data changes on transition from Idle clock state to active clock state (see CKP bit)

bit 7 **SSEN:** Slave Select Enable (Slave mode) bit
1 = $\overline{SSx}$ pin used for Slave mode
0 = SSx pin not used for Slave mode (pin is controlled by port function)

bit 6 **CKP:** Clock Polarity Select bit
1 = Idle state for clock is a high level; active state is a low level
0 = Idle state for clock is a low level; active state is a high level

bit 5 **MSTEN:** Master Mode Enable bit
1 = Master mode
0 = Slave mode

bit 4 **Unimplemented:** Read as '0'

bit 3-2 **STXISEL<1:0>:** SPI Transmit Buffer Empty Interrupt Mode bits
11 = Interrupt is generated when the buffer is not full (has one or more empty elements)
10 = Interrupt is generated when the buffer is empty by one-half or more
01 = Interrupt is generated when the buffer is completely empty
00 = Interrupt is generated when the last transfer is shifted out of SPISR and transmit operations are complete

bit 1-0 **SRXISEL<1:0>:** SPI Receive Buffer Full Interrupt Mode bits
11 = Interrupt is generated when the buffer is full
10 = Interrupt is generated when the buffer is full by one-half or more
01 = Interrupt is generated when the buffer is not empty
00 = Interrupt is generated when the last word in the receive buffer is read (i.e., buffer is empty)

Note 1: When using the 1:1 PBCLK divisor, the user's software should not read or write the peripheral's SFRs in the SYSCLK cycle immediately following the instruction that clears the module's ON bit.

2: This bit can only be written when the ON bit = 0.

3: This bit is not used in the Framed SPI mode. The user should program this bit to '0' for the Framed SPI mode (FRMEN = 1).

REGISTER 17-2: SPIxSTAT: SPI STATUS REGISTER

Bit Range	Bit 31/23/15/7	Bit 30/22/14/6	Bit 29/21/13/5	Bit 28/20/12/4	Bit 27/19/11/3	Bit 26/18/10/2	Bit 25/17/9/1	Bit 24/16/8/0
31:24	U-0	U-0	U-0	R-0	R-0	R-0	R-0	R-0
	—	—	—	RXBUFELM<4:0>				
23:16	U-0	U-0	U-0	R-0	R-0	R-0	R-0	R-0
	—	—	—	TXBUFELM<4:0>				
15:8	U-0	U-0	U-0	U-0	R-0	U-0	U-0	R-0
	—	—	—	—	SPIBUSY	—	—	SPITUR
7:0	R-0	R/W-0	R-0	U-0	R-1	U-0	R-0	R-0
	SRMT	SPIROV	SPIRBE	—	SPITBE	—	SPITBF	SPIRBF

Legend:	C = Clearable bit	HS = Set in hardware	
R = Readable bit	W = Writable bit	U = Unimplemented bit, read as ‘0’	
-n = Value at POR	‘1’ = Bit is set	‘0’ = Bit is cleared	x = Bit is unknown

bit 31-29 **Unimplemented:** Read as ‘0’

bit 28-24 **RXBUFELM<4:0>:** Receive Buffer Element Count bits (only valid when ENHBUF = 1)

bit 23-21 **Unimplemented:** Read as ‘0’

bit 20-16 **TXBUFELM<4:0>:** Transmit Buffer Element Count bits (only valid when ENHBUF = 1)

bit 15-12 **Unimplemented:** Read as ‘0’

bit 11 **SPIBUSY:** SPI Activity Status bit
1 = SPI peripheral is currently busy with some transactions
0 = SPI peripheral is currently idle

bit 10-9 **Unimplemented:** Read as ‘0’

bit 8 **SPITUR:** Transmit Under Run bit
1 = Transmit buffer has encountered an underrun condition
0 = Transmit buffer has no underrun condition
This bit is only valid in Framed Sync mode; the underrun condition must be cleared by disabling/re-enabling the module.

bit 7 **SRMT:** Shift Register Empty bit (only valid when ENHBUF = 1)
1 = When SPI module shift register is empty
0 = When SPI module shift register is not empty

bit 6 **SPIROV:** Receive Overflow Flag bit
1 = A new data is completely received and discarded. The user software has not read the previous data in the SPIxBUF register.
0 = No overflow has occurred
This bit is set in hardware; can only be cleared (= 0) in software.

bit 5 **SPIRBE:** RX FIFO Empty bit (only valid when ENHBUF = 1)
1 = RX FIFO is empty (CRPTR = SWPTR)
0 = RX FIFO is not empty (CRPTR ≠ SWPTR)

bit 4 **Unimplemented:** Read as ‘0’

bit 3 **SPITBE:** SPI Transmit Buffer Empty Status bit
1 = Transmit buffer, SPIxTXB is empty
0 = Transmit buffer, SPIxTXB is not empty
Automatically set in hardware when SPI transfers data from SPIxTXB to SPIxSR.
Automatically cleared in hardware when SPIxBUF is written to, loading SPIxTXB.

bit 2 **Unimplemented:** Read as ‘0’

© 2009-2013 Microchip Technology Inc.

REGISTER 17-2: SPIxSTAT: SPI STATUS REGISTER

bit 1 **SPITBF:** SPI Transmit Buffer Full Status bit

1 = Transmit not yet started, SPITXB is full
0 = Transmit buffer is not full

Standard Buffer Mode:

Automatically set in hardware when the core writes to the SPIBUF location, loading SPITXB.
Automatically cleared in hardware when the SPI module transfers data from SPITXB to SPISR.

Enhanced Buffer Mode:

Set when CWPTR + 1 = SRPTR; cleared otherwise

bit 0 **SPIRBF:** SPI Receive Buffer Full Status bit

1 = Receive buffer, SPIxRXB is full
0 = Receive buffer, SPIxRXB is not full

Standard Buffer Mode:

Automatically set in hardware when the SPI module transfers data from SPIxSR to SPIxRXB.
Automatically cleared in hardware when SPIxBUF is read from, reading SPIxRXB.

Enhanced Buffer Mode:

Set when SWPTR + 1 = CRPTR; cleared otherwise

NOTES:

© 2009-2013 Microchip Technology Inc.

18.0 INTER-INTEGRATED CIRCUIT™ (I^2C™)

Note 1: This data sheet summarizes the features of the PIC32MX5XX/6XX/7XX family of devices. It is not intended to be a comprehensive reference source. To complement the information in this data sheet, refer to **Section 24. "Inter-Integrated Circuit™ (I^2C™)"** (DS60001116) in the *"PIC32 Family Reference Manual"*, which is available from the Microchip web site (www.microchip.com/PIC32).

2: Some registers and associated bits described in this section may not be available on all devices. Refer to **Section 4.0 "Memory Organization"** in this data sheet for device-specific register and bit information.

The I^2C module provides complete hardware support for both Slave and Multi-Master modes of the I^2C serial communication standard. Figure 18-1 illustrates the I^2C module block diagram.

Each I^2C module has a 2-pin interface: the SCLx pin is clock and the SDAx pin is data.

Each I^2C module offers the following key features:

- I^2C interface supporting both master and slave operation
- I^2C Slave mode supports 7-bit and 10-bit addressing
- I^2C Master mode supports 7-bit and 10-bit addressing
- I^2C port allows bidirectional transfers between master and slaves
- Serial clock synchronization for the I^2C port can be used as a handshake mechanism to suspend and resume serial transfer (SCLREL control)
- I^2C supports multi-master operation; detects bus collision and arbitrates accordingly
- Provides support for address bit masking

FIGURE 18-1: I²C™ BLOCK DIAGRAM

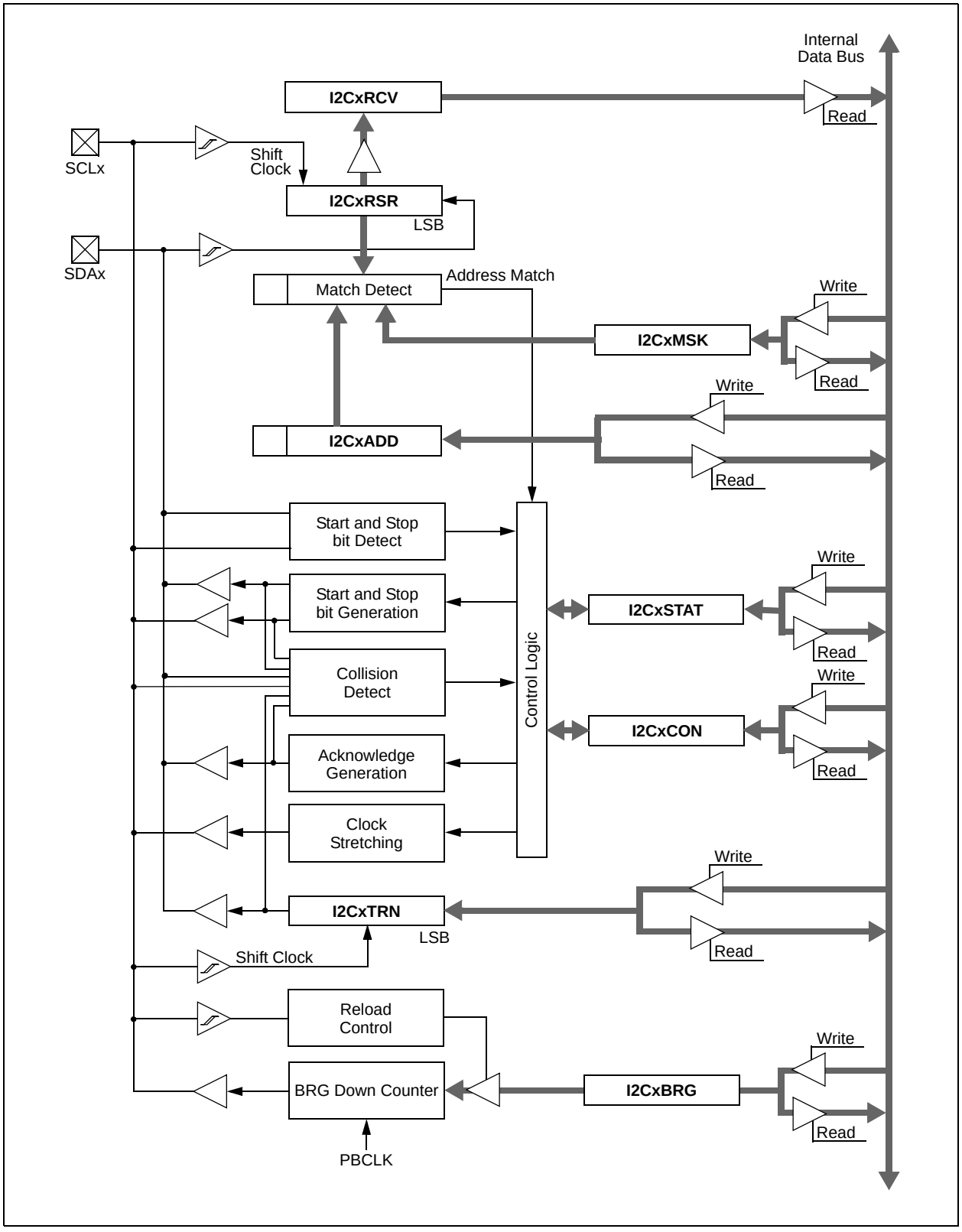

© 2009-2013 Microchip Technology Inc.

18.1 Control Registers

REGISTER 18-1: I2CxCON: I^{2}C™ CONTROL REGISTER

Bit Range	Bit 31/23/15/7	Bit 30/22/14/6	Bit 29/21/13/5	Bit 28/20/12/4	Bit 27/19/11/3	Bit 26/18/10/2	Bit 25/17/9/1	Bit 24/16/8/0
31:24	U-0	U-0	U-0	U-0	U-0	U-0	U-0	U-0
	—	—	—	—	—	—	—	—
23:16	U-0	U-0	U-0	U-0	U-0	U-0	U-0	U-0
	—	—	—	—	—	—	—	—
15:8	R/W-0	U-0	R/W-0	R/W-1, HC	R/W-0	R/W-0	R/W-0	R/W-0
	ON(1)	—	SIDL	SCLREL	STRICT	A10M	DISSLW	SMEN
7:0	R/W-0	R/W-0	R/W-0	R/W-0, HC	R/W-0, HC	R/W-0, HC	R/W-0, HC	R/W-0, HC
	GCEN	STREN	ACKDT	ACKEN	RCEN	PEN	RSEN	SEN

Legend:	HC = Cleared by hardware		
R = Readable bit	W = Writable bit	U = Unimplemented bit, read as ‘0’	
-n = Value at POR	‘1’ = Bit is set	‘0’ = Bit is cleared	x = Bit is unknown

bit 31-16 **Unimplemented:** Read as ‘0’

bit 15 **ON:** I^{2}C Enable bit(1)
1 = Enables the I^{2}C module and configures the SDA and SCL pins as serial port pins
0 = Disables the I^{2}C module; all I^{2}C pins are controlled by PORT functions

bit 14 **Unimplemented:** Read as ‘0’

bit 13 **SIDL:** Stop in Idle Mode bit
1 = Discontinue module operation when device enters Idle mode
0 = Continue module operation when device enters Idle mode

bit 12 **SCLREL:** SCLx Release Control bit (when operating as I^{2}C slave)
1 = Release SCLx clock
0 = Hold SCLx clock low (clock stretch)

If STREN = 1:
Bit is R/W (software can write ‘0’ to initiate stretch and write ‘1’ to release clock). Cleared by hardware at the beginning of a slave transmission and at the end of slave reception.

If STREN = 0:
Bit is R/S (software can only write ‘1’ to release clock). Cleared by hardware at the beginning of slave transmission.

bit 11 **STRICT:** Strict I^{2}C Reserved Address Rule Enable bit
1 = Strict reserved addressing is enforced. Device does not respond to reserved address space or generate addresses in reserved address space.
0 = Strict I^{2}C reserved address rule is not enabled

bit 10 **A10M:** 10-bit Slave Address bit
1 = I2CxADD is a 10-bit slave address
0 = I2CxADD is a 7-bit slave address

bit 9 **DISSLW:** Disable Slew Rate Control bit
1 = Slew rate control disabled
0 = Slew rate control enabled

bit 8 **SMEN:** SMBus Input Levels bit
1 = Enable I/O pin thresholds compliant with SMBus specification
0 = Disable SMBus input thresholds

Note 1: When using the 1:1 PBCLK divisor, the user’s software should not read/write the peripheral’s SFRs in the SYSCLK cycle immediately following the instruction that clears the module’s ON bit.

REGISTER 18-1: I2CxCON: I^{2}C™ CONTROL REGISTER (CONTINUED)

bit 7 **GCEN:** General Call Enable bit (when operating as I^{2}C slave)
1 = Enable interrupt when a general call address is received in the I2CxRSR (module is enabled for reception)
0 = General call address disabled

bit 6 **STREN:** SCLx Clock Stretch Enable bit (when operating as I^{2}C slave)
Used in conjunction with SCLREL bit.
1 = Enable software or receive clock stretching
0 = Disable software or receive clock stretching

bit 5 **ACKDT:** Acknowledge Data bit (when operating as I^{2}C master, applicable during master receive)
Value that is transmitted when the software initiates an acknowledge sequence.
1 = Send NACK during an acknowledge
0 = Send ACK during an acknowledge

bit 4 **ACKEN:** Acknowledge Sequence Enable bit (when operating as I^{2}C master, applicable during master receive)
1 = Initiate Acknowledge sequence on SDAx and SCLx pins and transmit ACKDT data bit. Hardware clear at end of master Acknowledge sequence.
0 = Acknowledge sequence not in progress

bit 3 **RCEN:** Receive Enable bit (when operating as I^{2}C master)
1 = Enables Receive mode for I^{2}C. Hardware clear at end of eighth bit of master receive data byte.
0 = Receive sequence not in progress

bit 2 **PEN:** Stop Condition Enable bit (when operating as I^{2}C master)
1 = Initiate Stop condition on SDAx and SCLx pins. Hardware clear at end of master Stop sequence.
0 = Stop condition not in progress

bit 1 **RSEN:** Repeated Start Condition Enable bit (when operating as I^{2}C master)
1 = Initiate Repeated Start condition on SDAx and SCLx pins. Hardware clear at end of master Repeated Start sequence.
0 = Repeated Start condition is not in progress

bit 0 **SEN:** Start Condition Enable bit (when operating as I^{2}C master)
1 = Initiate Start condition on SDAx and SCLx pins. Hardware clear at end of master Start sequence.
0 = Start condition is not in progress

Note 1: When using the 1:1 PBCLK divisor, the user's software should not read/write the peripheral's SFRs in the SYSCLK cycle immediately following the instruction that clears the module's ON bit.

© 2009-2013 Microchip Technology Inc.

REGISTER 18-2: I2CxSTAT: I^{2}C™ STATUS REGISTER

Bit Range	Bit 31/23/15/7	Bit 30/22/14/6	Bit 29/21/13/5	Bit 28/20/12/4	Bit 27/19/11/3	Bit 26/18/10/2	Bit 25/17/9/1	Bit 24/16/8/0
31:24	U-0	U-0	U-0	U-0	U-0	U-0	U-0	U-0
	—	—	—	—	—	—	—	—
23:16	U-0	U-0	U-0	U-0	U-0	U-0	U-0	U-0
	—	—	—	—	—	—	—	—
15:8	R-0, HSC	R-0, HSC	U-0	U-0	U-0	R/C-0, HS	R-0, HSC	R-0, HSC
	ACKSTAT	TRSTAT	—	—	—	BCL	GCSTAT	ADD10
7:0	R/C-0, HS	R/C-0, HS	R-0, HSC	R/C-0, HSC	R/C-0, HSC	R-0, HSC	R-0, HSC	R-0, HSC
	IWCOL	I2COV	D_A	P	S	R_W	RBF	TBF

Legend:	HS = Set by hardware	HSC = Hardware set/cleared	
R = Readable bit	W = Writable bit	U = Unimplemented bit, read as ‘0’	
-n = Value at POR	‘1’ = Bit is set	‘0’ = Bit is cleared	C = Clearable bit

bit 31-16 **Unimplemented:** Read as ‘0’

bit 15 **ACKSTAT:** Acknowledge Status bit (when operating as I^{2}C master, applicable to master transmit operation)
This bit is set or cleared by hardware at the end of a slave Acknowledge.
1 = NACK received from slave
0 = ACK received from slave

bit 14 **TRSTAT:** Transmit Status bit (when operating as I^{2}C master, applicable to master transmit operation)
This bit is set by hardware at the beginning of a master transmission, and is cleared by hardware at the end of a slave Acknowledge.
1 = Master transmit is in progress (8 bits + ACK)
0 = Master transmit is not in progress

bit 13-11 **Unimplemented:** Read as ‘0’

bit 10 **BCL:** Master Bus Collision Detect bit
This bit is set by hardware at the detection of a bus collision.
1 = A bus collision has been detected during a master operation
0 = No collision

bit 9 **GCSTAT:** General Call Status bit
This bit is set by hardware when the address matches the general call address, and is cleared by hardware clear at a Stop detection.
1 = General call address was received
0 = General call address was not received

bit 8 **ADD10:** 10-bit Address Status bit
This bit is set by hardware upon a match of the 2nd byte of the matched 10-bit address, and is cleared by hardware at a Stop detection.
1 = 10-bit address was matched
0 = 10-bit address was not matched

bit 7 **IWCOL:** Write Collision Detect bit
This bit is set by hardware at the occurrence of a write to I2CxTRN while busy (cleared by software).
1 = An attempt to write the I2CxTRN register failed because the I^{2}C module is busy
0 = No collision

bit 6 **I2COV:** Receive Overflow Flag bit
This bit is set by hardware at an attempt to transfer I2CxRSR to I2CxRCV (cleared by software).
1 = A byte was received while the I2CxRCV register is still holding the previous byte
0 = No overflow

REGISTER 18-2: I2CxSTAT: I^{2}C™ STATUS REGISTER (CONTINUED)

bit 5 **D_A:** Data/Address bit (when operating as I^{2}C slave)

This bit is cleared by hardware upon a device address match, and is set by hardware by reception of the slave byte.

1 = Indicates that the last byte received was data
0 = Indicates that the last byte received was device address

bit 4 **P:** Stop bit

This bit is set or cleared by hardware when a Start, Repeated Start, or Stop condition is detected.

1 = Indicates that a Stop bit has been detected last
0 = Stop bit was not detected last

bit 3 **S:** Start bit

This bit is set or cleared by hardware when a Start, Repeated Start, or Stop condition is detected.

1 = Indicates that a Start (or Repeated Start) bit has been detected last
0 = Start bit was not detected last

bit 2 **R_W:** Read/Write Information bit (when operating as I^{2}C slave)

This bit is set or cleared by hardware after reception of an I^{2}C device address byte.

1 = Read – indicates data transfer is output from slave
0 = Write – indicates data transfer is input to slave

bit 1 **RBF:** Receive Buffer Full Status bit

This bit is set by hardware when the I2CxRCV register is written with a received byte, and is cleared by hardware when software reads I2CxRCV.

1 = Receive complete, I2CxRCV is full
0 = Receive not complete, I2CxRCV is empty

bit 0 **TBF:** Transmit Buffer Full Status bit

This bit is set by hardware when software writes to the I2CxTRN register, and is cleared by hardware upon completion of data transmission.

1 = Transmit in progress, I2CxTRN is full
0 = Transmit complete, I2CxTRN is empty

© 2009-2013 Microchip Technology Inc.

19.0 UNIVERSAL ASYNCHRONOUS RECEIVER TRANSMITTER (UART)

Note 1: This data sheet summarizes the features of the PIC32MX5XX/6XX/7XX family of devices. It is not intended to be a comprehensive reference source. To complement the information in this data sheet, refer to **Section 21. "Universal Asynchronous Receiver Transmitter (UART)"** (DS60001107) in the *"PIC32 Family Reference Manual"*, which is available from the Microchip web site (www.microchip.com/PIC32).

2: Some registers and associated bits described in this section may not be available on all devices. Refer to **Section 4.0 "Memory Organization"** in this data sheet for device-specific register and bit information.

The UART module is one of the serial I/O modules available in PIC32MX5XX/6XX/7XX family devices. The UART is a full-duplex, asynchronous communication channel that communicates with peripheral devices and personal computers through protocols, such as RS-232, RS-485, LIN 1.2 and IrDA®. The module also supports the hardware flow control option, with $\overline{\text{UxCTS}}$ and $\overline{\text{UxRTS}}$ pins, and also includes an IrDA encoder and decoder.

The primary features of the UART module are:

- Full-duplex, 8-bit or 9-bit data transmission
- Even, Odd or No Parity options (for 8-bit data)
- One or two Stop bits
- Hardware auto-baud feature
- Hardware flow control option
- Fully integrated Baud Rate Generator (BRG) with 16-bit prescaler
- Baud rates ranging from 76 bps to 20 Mbps at 80 MHz
- 8-level deep First-In-First-Out (FIFO) transmit data buffer
- 8-level deep FIFO receive data buffer
- Parity, framing and buffer overrun error detection
- Support for interrupt-only on address detect (ninth bit = 1)
- Separate transmit and receive interrupts
- Loopback mode for diagnostic support
- LIN 1.2 Protocol support
- IrDA encoder and decoder with 16x baud clock output for external IrDA encoder/decoder support

Figure 19-1 illustrates a simplified block diagram of the UART module.

FIGURE 19-1: UART SIMPLIFIED BLOCK DIAGRAM

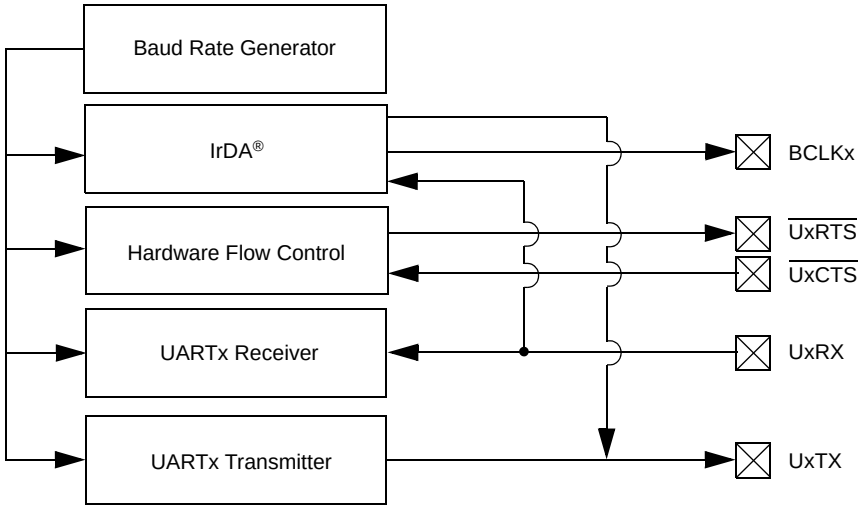

Note: Not all pins are available for all UART modules. Refer to the device-specific pin diagram for more information (see **"Pin Diagrams"**).

Figure 19-2 and Figure 19-3 illustrate typical receive and transmit timing for the UART module.

FIGURE 19-2: UART RECEPTION

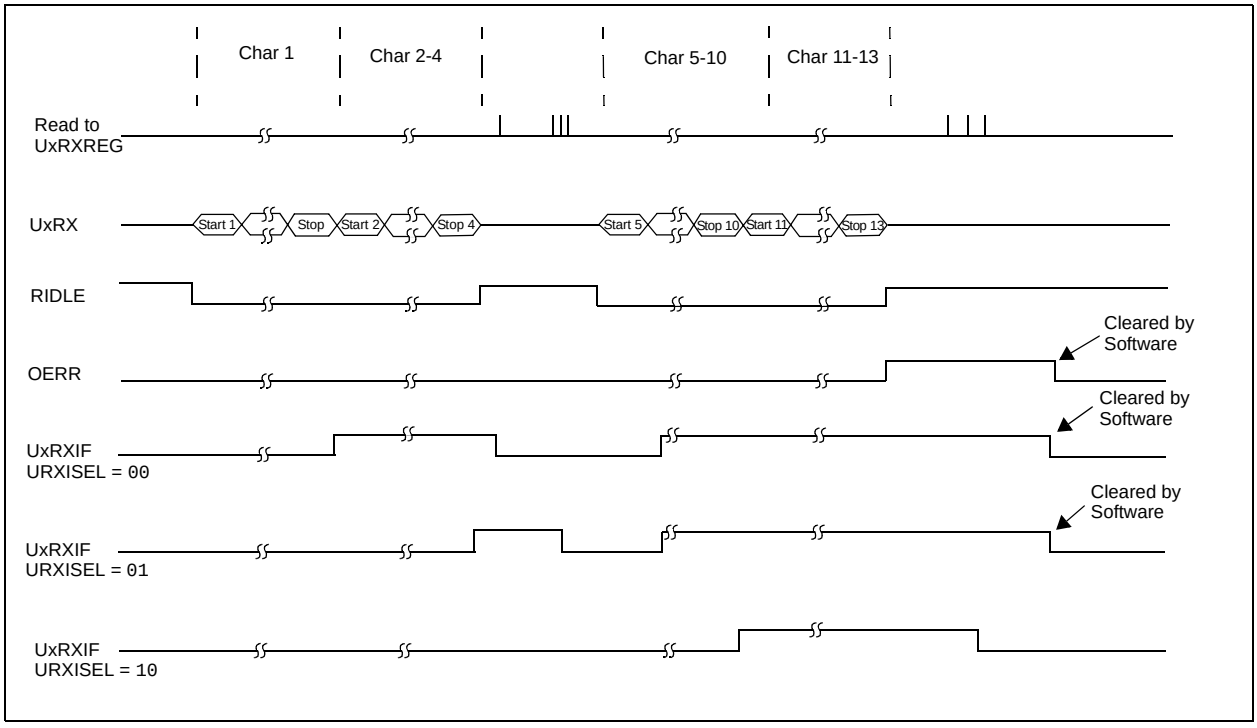

FIGURE 19-3: TRANSMISSION (8-BIT OR 9-BIT DATA)

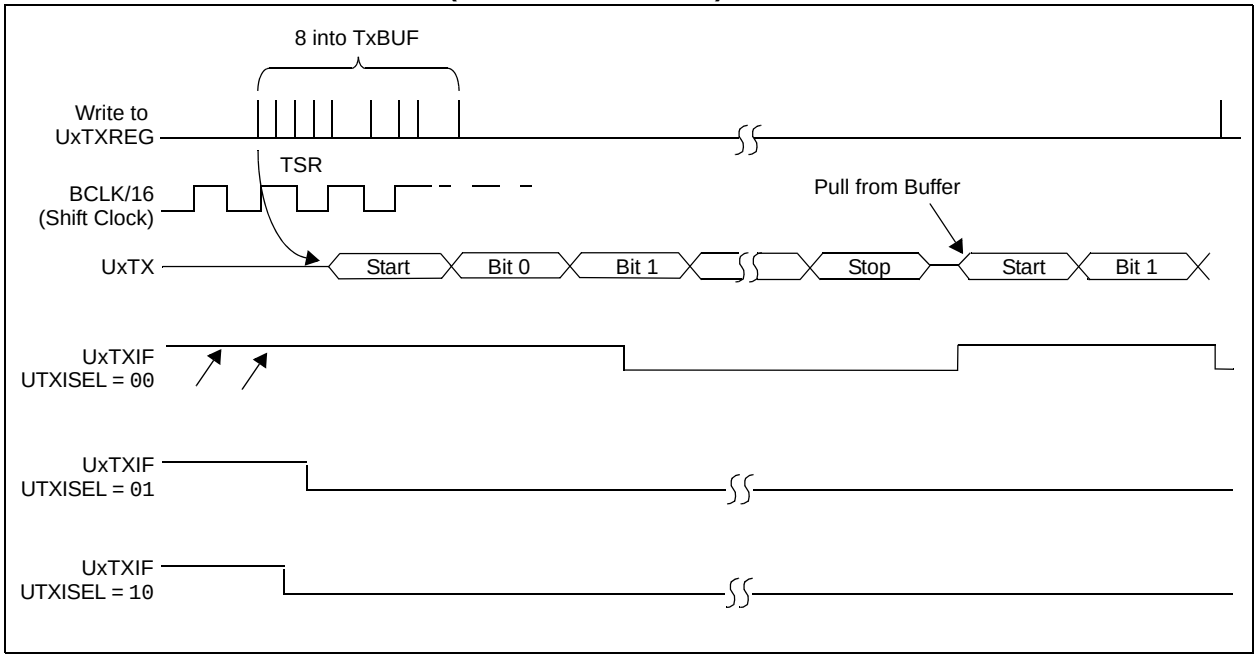

© 2009-2013 Microchip Technology Inc.

19.1 Control Registers

REGISTER 19-1: UxMODE: UARTx MODE REGISTER

Bit Range	Bit 31/23/15/7	Bit 30/22/14/6	Bit 29/21/13/5	Bit 28/20/12/4	Bit 27/19/11/3	Bit 26/18/10/2	Bit 25/17/9/1	Bit 24/16/8/0
31:24	U-0	U-0	U-0	U-0	U-0	U-0	U-0	U-0
	—	—	—	—	—	—	—	—
23:16	U-0	U-0	U-0	U-0	U-0	U-0	U-0	U-0
	—	—	—	—	—	—	—	—
15:8	R/W-0	U-0	R/W-0	R/W-0	R/W-0	U-0	R/W-0	R/W-0
	ON(1)	—	SIDL	IREN	RTSMD	—	UEN<1:0>	
7:0	R/W-0	R/W-0	R/W-0, HC	R/W-0	R/W-0	R/W-0	R/W-0	R/W-0
	WAKE	LPBACK	ABAUD	RXINV	BRGH	PDSEL<1:0>		STSEL

Legend:		HC = Cleared by hardware	
R = Readable bit	W = Writable bit	U = Unimplemented bit, read as ‘0’	
-n = Value at POR	‘1’ = Bit is set	‘0’ = Bit is cleared	x = Bit is unknown

bit 31-16 **Unimplemented:** Read as ‘0’

bit 15 **ON:** UARTx Enable bit(1)
- 1 = UARTx is enabled. UARTx pins are controlled by UARTx as defined by UEN<1:0> and UTXEN control bits.
- 0 = UARTx is disabled. All UARTx pins are controlled by corresponding bits in the PORTx, TRISx and LATx registers; UARTx power consumption is minimal.

bit 14 **Unimplemented:** Read as ‘0’

bit 13 **SIDL:** Stop in Idle Mode bit
- 1 = Discontinue operation when device enters Idle mode
- 0 = Continue operation when device enters Idle mode

bit 12 **IREN:** IrDA Encoder and Decoder Enable bit
- 1 = IrDA is enabled
- 0 = IrDA is disabled

bit 11 **RTSMD:** Mode Selection for $\overline{\text{UxRTS}}$ Pin bit
- 1 = $\overline{\text{UxRTS}}$ pin is in Simplex mode
- 0 = $\overline{\text{UxRTS}}$ pin is in Flow Control mode

bit 10 **Unimplemented:** Read as ‘0’

bit 9-8 **UEN<1:0>:** UARTx Enable bits
- 11 = UxTX, UxRX and UxBCLK pins are enabled and used; $\overline{\text{UxCTS}}$ pin is controlled by corresponding bits in the PORTx register
- 10 = UxTX, UxRX, $\overline{\text{UxCTS}}$ and $\overline{\text{UxRTS}}$ pins are enabled and used
- 01 = UxTX, UxRX and $\overline{\text{UxRTS}}$ pins are enabled and used; $\overline{\text{UxCTS}}$ pin is controlled by corresponding bits in the PORTx register
- 00 = UxTX and UxRX pins are enabled and used; $\overline{\text{UxCTS}}$ and $\overline{\text{UxRTS}}$/UxBCLK pins are controlled by corresponding bits in the PORTx register

bit 7 **WAKE:** Enable Wake-up on Start bit Detect During Sleep Mode bit
- 1 = Wake-up is enabled
- 0 = Wake-up is disabled

bit 6 **LPBACK:** UARTx Loopback Mode Select bit
- 1 = Loopback mode is enabled
- 0 = Loopback mode is disabled

Note 1: When using the 1:1 PBCLK divisor, the user software should not read/write the peripheral SFRs in the SYSCLK cycle immediately following the instruction that clears the module’s ON bit.

REGISTER 19-1: UxMODE: UARTx MODE REGISTER (CONTINUED)

bit 5 **ABAUD:** Auto-Baud Enable bit
1 = Enable baud rate measurement on the next character – requires reception of Sync character (0x55); cleared by hardware upon completion
0 = Baud rate measurement disabled or completed

bit 4 **RXINV:** Receive Polarity Inversion bit
1 = UxRX Idle state is '0'
0 = UxRX Idle state is '1'

bit 3 **BRGH:** High Baud Rate Enable bit
1 = High-Speed mode – 4x baud clock enabled
0 = Standard Speed mode – 16x baud clock enabled

bit 2-1 **PDSEL<1:0>:** Parity and Data Selection bits
11 = 9-bit data, no parity
10 = 8-bit data, odd parity
01 = 8-bit data, even parity
00 = 8-bit data, no parity

bit 0 **STSEL:** Stop Selection bit
1 = 2 Stop bits
0 = 1 Stop bit

Note 1: When using the 1:1 PBCLK divisor, the user software should not read/write the peripheral SFRs in the SYSCLK cycle immediately following the instruction that clears the module's ON bit.

© 2009-2013 Microchip Technology Inc.

REGISTER 19-2: UxSTA: UARTx STATUS AND CONTROL REGISTER

Bit Range	Bit 31/23/15/7	Bit 30/22/14/6	Bit 29/21/13/5	Bit 28/20/12/4	Bit 27/19/11/3	Bit 26/18/10/2	Bit 25/17/9/1	Bit 24/16/8/0
31:24	U-0	U-0	U-0	U-0	U-0	U-0	U-0	R/W-0
	—	—	—	—	—	—	—	ADM_EN
23:16	R/W-0	R/W-0	R/W-0	R/W-0	R/W-0	R/W-0	R/W-0	R/W-0
	ADDR<7:0>							
15:8	R/W-0	R/W-0	R/W-0	R/W-0	R/W-0, HC	R/W-0	R-0	R-1
	UTXISEL<1:0>		UTXINV	URXEN	UTXBRK	UTXEN	UTXBF	TRMT
7:0	R/W-0	R/W-0	R/W-0	R-1	R-0	R-0	R/W-0, HS	R-0
	URXISEL<1:0>		ADDEN	RIDLE	PERR	FERR	OERR	URXDA

Legend:	HS = Set by hardware	HC = Cleared by hardware	
R = Readable bit	W = Writable bit	U = Unimplemented bit, read as ‘0’	
-n = Value at POR	‘1’ = Bit is set	‘0’ = Bit is cleared	x = Bit is unknown

bit 31-25 **Unimplemented:** Read as ‘0’

bit 24 **ADM_EN:** Automatic Address Detect Mode Enable bit
1 = Automatic Address Detect mode is enabled
0 = Automatic Address Detect mode is disabled

bit 23-16 **ADDR<7:0>:** Automatic Address Mask bits
When the ADM_EN bit is ‘1’, this value defines the address character to use for automatic address detection.

bit 15-14 **UTXISEL<1:0>:** TX Interrupt Mode Selection bits
11 = Reserved, do not use
10 = Interrupt is generated and asserted while the transmit buffer is empty
01 = Interrupt is generated and asserted when all characters have been transmitted
00 = Interrupt is generated and asserted while the transmit buffer contains at least one empty space

bit 13 **UTXINV:** Transmit Polarity Inversion bit
If IrDA mode is disabled (i.e., IREN (UxMODE<12>) is ‘0’):
1 = UxTX Idle state is ‘0’
0 = UxTX Idle state is ‘1’

If IrDA mode is enabled (i.e., IREN (UxMODE<12>) is ‘1’):
1 = IrDA encoded UxTX Idle state is ‘1’
0 = IrDA encoded UxTX Idle state is ‘0’

bit 12 **URXEN:** Receiver Enable bit
1 = UARTx receiver is enabled. UxRX pin is controlled by UARTx (if ON = 1)
0 = UARTx receiver is disabled. UxRX pin is ignored by the UARTx module. UxRX pin is controlled by port.

bit 11 **UTXBRK:** Transmit Break bit
1 = Send Break on next transmission. Start bit followed by twelve ‘0’ bits, followed by Stop bit; cleared by hardware upon completion.
0 = Break transmission is disabled or completed

bit 10 **UTXEN:** Transmit Enable bit
1 = UARTx transmitter is enabled. UxTX pin is controlled by UARTx (if ON = 1)
0 = UARTx transmitter is disabled. Any pending transmission is aborted and buffer is reset. UxTX pin is controlled by port.

bit 9 **UTXBF:** Transmit Buffer Full Status bit (read-only)
1 = Transmit buffer is full
0 = Transmit buffer is not full, at least one more character can be written

REGISTER 19-2: UxSTA: UARTx STATUS AND CONTROL REGISTER (CONTINUED)

bit 8 **TRMT:** Transmit Shift Register is Empty bit (read-only)
1 = Transmit shift register is empty and transmit buffer is empty (the last transmission has completed)
0 = Transmit shift register is not empty, a transmission is in progress or queued in the transmit buffer

bit 7-6 **URXISEL<1:0>:** Receive Interrupt Mode Selection bit
11 = Reserved
10 = Interrupt flag bit is asserted while receive buffer is 3/4 or more full (has 6 or more data characters)
01 = Interrupt flag bit is asserted while receive buffer is 1/2 or more full (has 4 or more data characters)
00 = Interrupt flag bit is asserted while receive buffer is not empty (has at least 1 data character)

bit 5 **ADDEN:** Address Character Detect bit (bit 8 of received data = 1)
1 = Address Detect mode is enabled. If 9-bit mode is not selected, this control bit has no effect.
0 = Address Detect mode is disabled

bit 4 **RIDLE:** Receiver Idle bit (read-only)
1 = Receiver is idle
0 = Data is being received

bit 3 **PERR:** Parity Error Status bit (read-only)
1 = Parity error has been detected for the current character
0 = Parity error has not been detected

bit 2 **FERR:** Framing Error Status bit (read-only)
1 = Framing error has been detected for the current character
0 = Framing error has not been detected

bit 1 **OERR:** Receive Buffer Overrun Error Status bit.
This bit is set in hardware and can only be cleared (= 0) in software. Clearing a previously set OERR bit resets the receiver buffer and RSR to an empty state.
1 = Receive buffer has overflowed
0 = Receive buffer has not overflowed

bit 0 **URXDA:** Receive Buffer Data Available bit (read-only)
1 = Receive buffer has data, at least one more character can be read
0 = Receive buffer is empty

© 2009-2013 Microchip Technology Inc.

20.0 PARALLEL MASTER PORT (PMP)

Note 1: This data sheet summarizes the features of the PIC32MX5XX/6XX/7XX family of devices. It is not intended to be a comprehensive reference source. To complement the information in this data sheet, refer to **Section 13. "Parallel Master Port (PMP)"** (DS60001128) in the *"PIC32 Family Reference Manual"*, which is available from the Microchip web site (www.microchip.com/PIC32).

2: Some registers and associated bits described in this section may not be available on all devices. Refer to **Section 4.0 "Memory Organization"** in this data sheet for device-specific register and bit information.

The PMP is a parallel 8-bit/16-bit input/output module specifically designed to communicate with a wide variety of parallel devices, such as communications peripherals, LCDs, external memory devices and microcontrollers. Because the interface to parallel peripherals varies significantly, the PMP module is highly configurable. Figure 20-1 shows the PMP module pinout and its connections to external devices.

Key features of the PMP module include:

- 8-bit and 16-bit interface
- Up to 16 programmable address lines
- Up to two Chip Select lines
- Programmable strobe options
  - Individual read and write strobes, or
  - Read/$\overline{\text{Write}}$ strobe with enable strobe
- Address auto-increment/auto-decrement
- Programmable address/data multiplexing
- Programmable polarity on control signals
- Parallel Slave Port support
  - Legacy addressable
  - Address support
  - 4-byte deep auto-incrementing buffer
- Programmable wait states
- Operates during Sleep and Idle modes
- Fast bit manipulation using CLR, SET and INV registers

Note: On 64-pin devices, the PMD<15:8> data pins are not available.

FIGURE 20-1: PMP MODULE PINOUT AND CONNECTIONS TO EXTERNAL DEVICES

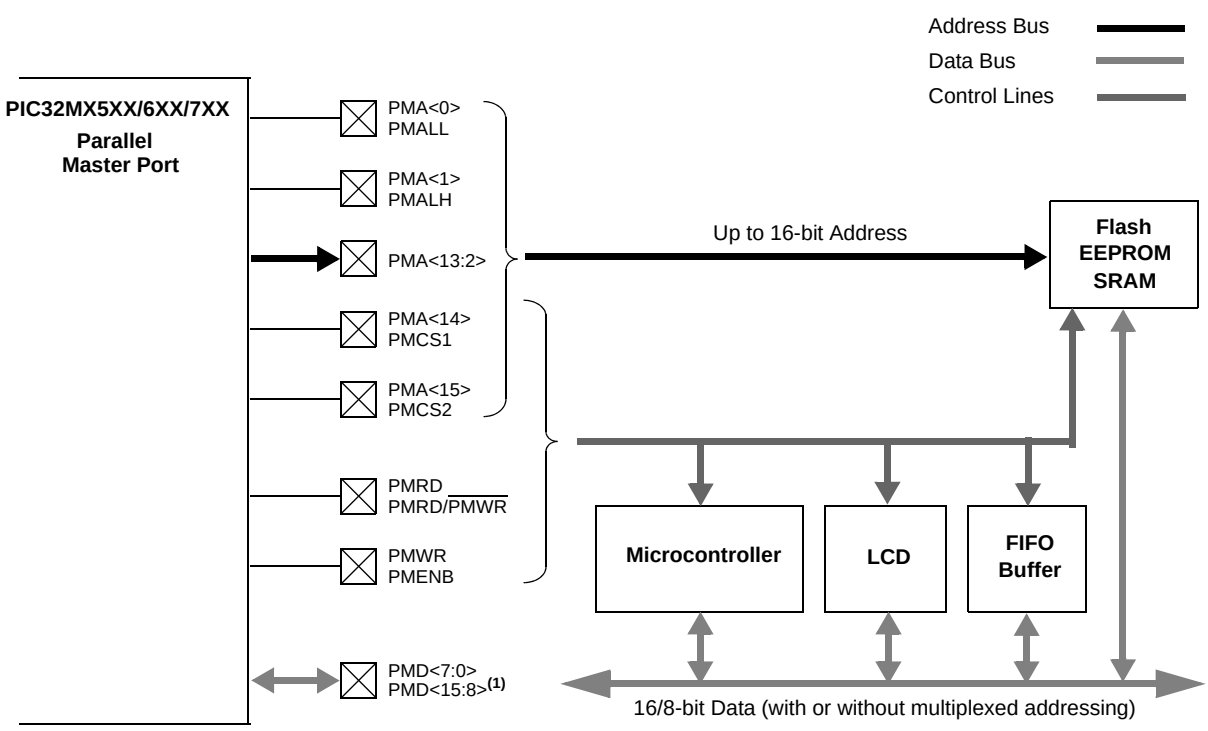

Note 1: On 64-pin devices, data pins, PMD<15:8>, are not available in 16-bit Master modes.

20.1 Control Registers

REGISTER 20-1: PMCON: PARALLEL PORT CONTROL REGISTER

Bit Range	Bit 31/23/15/7	Bit 30/22/14/6	Bit 29/21/13/5	Bit 28/20/12/4	Bit 27/19/11/3	Bit 26/18/10/2	Bit 25/17/9/1	Bit 24/16/8/0
31:24	U-0	U-0	U-0	U-0	U-0	U-0	U-0	U-0
	—	—	—	—	—	—	—	—
23:16	U-0	U-0	U-0	U-0	U-0	U-0	U-0	U-0
	—	—	—	—	—	—	—	—
15:8	R/W-0	U-0	R/W-0	R/W-0	R/W-0	R/W-0	R/W-0	R/W-0
	ON(1)	—	SIDL	ADRMUX<1:0>		PMPTTL	PTWREN	PTRDEN
7:0	R/W-0	R/W-0	R/W-0	U-0	R/W-0	U-0	R/W-0	R/W-0
	CSF<1:0>(2)		ALP(2)	—	CS1P(2)	—	WRSP	RDSP

Legend:			
R = Readable bit	W = Writable bit	U = Unimplemented bit, read as ‘0’	
-n = Value at POR	‘1’ = Bit is set	‘0’ = Bit is cleared	x = Bit is unknown

bit 31-16 **Unimplemented:** Read as ‘0’

bit 15 **ON:** Parallel Master Port Enable bit(1)
- 1 = PMP is enabled
- 0 = PMP is disabled, no off-chip access performed

bit 14 **Unimplemented:** Read as ‘0’

bit 13 **SIDL:** Stop in Idle Mode bit
- 1 = Discontinue module operation when device enters Idle mode
- 0 = Continue module operation when device enters Idle mode

bit 12-11 **ADRMUX<1:0>:** Address/Data Multiplexing Selection bits
- 11 = Lower 8 bits of address are multiplexed on PMD<7:0> pins; upper 8 bits are not used
- 10 = All 16 bits of address are multiplexed on PMD<7:0> pins
- 01 = Lower 8 bits of address are multiplexed on PMD<7:0> pins, upper bits are on PMA<10:8> and PMA<14>
- 00 = Address and data appear on separate pins

bit 10 **PMPTTL:** PMP Module TTL Input Buffer Select bit
- 1 = PMP module uses TTL input buffers
- 0 = PMP module uses Schmitt Trigger input buffer

bit 9 **PTWREN:** Write Enable Strobe Port Enable bit
- 1 = PMWR/PMENB port is enabled
- 0 = PMWR/PMENB port is disabled

bit 8 **PTRDEN:** Read/Write Strobe Port Enable bit
- 1 = PMRD/PMWR port is enabled
- 0 = PMRD/PMWR port is disabled

bit 7-6 **CSF<1:0>:** Chip Select Function bits(2)
- 11 = Reserved
- 10 = PMCS1 functions as Chip Select
- 01 = PMCS1 functions as address bit 14
- 00 = PMCS1 functions as address bit 14

Note 1: When using the 1:1 PBCLK divisor, the user’s software should not read/write the peripheral’s SFRs in the SYSCLK cycle immediately following the instruction that clears the module’s ON control bit.

2: These bits have no effect when their corresponding pins are used as address lines.

© 2009-2013 Microchip Technology Inc.

REGISTER 20-1: PMCON: PARALLEL PORT CONTROL REGISTER (CONTINUED)

bit 5 **ALP:** Address Latch Polarity bit(2)

1 = Active-high (PMALL and PMALH)
0 = Active-low (PMALL and PMALH)

bit 4 **Unimplemented:** Read as '0'

bit 3 **CS1P:** Chip Select 0 Polarity bit(2)

1 = Active-high (PMCS1)
0 = Active-low (PMCS1)

bit 2 **Unimplemented:** Read as '0'

bit 1 **WRSP:** Write Strobe Polarity bit

For Slave Modes and Master mode 2 (PMMODE<9:8> = 00,01,10):

1 = Write strobe active-high (PMWR)
0 = Write strobe active-low (PMWR)

For Master mode 1 (PMMODE<9:8> = 11):

1 = Enable strobe active-high (PMENB)
0 = Enable strobe active-low (PMENB)

bit 0 **RDSP:** Read Strobe Polarity bit

For Slave modes and Master mode 2 (PMMODE<9:8> = 00,01,10):

1 = Read Strobe active-high (PMRD)
0 = Read Strobe active-low (PMRD)

For Master mode 1 (PMMODE<9:8> = 11):

1 = Read/write strobe active-high (PMRD/PMWR)
0 = Read/write strobe active-low (PMRD/PMWR)

Note 1: When using the 1:1 PBCLK divisor, the user's software should not read/write the peripheral's SFRs in the SYSCLK cycle immediately following the instruction that clears the module's ON control bit.

2: These bits have no effect when their corresponding pins are used as address lines.

REGISTER 20-2: PMMODE: PARALLEL PORT MODE REGISTER

Bit Range	Bit 31/23/15/7	Bit 30/22/14/6	Bit 29/21/13/5	Bit 28/20/12/4	Bit 27/19/11/3	Bit 26/18/10/2	Bit 25/17/9/1	Bit 24/16/8/0
31:24	U-0	U-0	U-0	U-0	U-0	U-0	U-0	U-0
	—	—	—	—	—	—	—	—
23:16	U-0	U-0	U-0	U-0	U-0	U-0	U-0	U-0
	—	—	—	—	—	—	—	—
15:8	R-0	R/W-0	R/W-0	R/W-0	R/W-0	U-0	R/W-0	R/W-0
	BUSY	IRQM<1:0>		INCM<1:0>		—	MODE<1:0>	
7:0	R/W-0	R/W-0	R/W-0	R/W-0	R/W-0	R/W-0	R/W-0	R/W-0
	WAITB<1:0>(1)		WAITM<3:0>(1)				WAITE<1:0>(1)	

Legend:			
R = Readable bit	W = Writable bit	U = Unimplemented bit, read as ‘0’	
-n = Value at POR	‘1’ = Bit is set	‘0’ = Bit is cleared	x = Bit is unknown

bit 31-16 **Unimplemented:** Read as ‘0’

bit 15 **BUSY:** Busy bit (only Master mode)
- 1 = Port is busy
- 0 = Port is not busy

bit 14-13 **IRQM<1:0>:** Interrupt Request Mode bits
- 11 = Reserved
- 10 = Interrupt generated when Read Buffer 3 is read or Write Buffer 3 is written (Buffered PSP mode) or on a read or write operation when PMA<1:0> =11 (only Addressable Slave mode)
- 01 = Interrupt generated at the end of the read/write cycle
- 00 = Interrupt is not generated

bit 12-11 **INCM<1:0>:** Increment Mode bits
- 11 = Slave mode read and write buffers auto-increment (only PMMODE<1:0> = 00)
- 10 = Decrement ADDR<10:2> and ADDR<14> by 1 every read/write cycle(2)
- 01 = Increment ADDR<10:2> and ADDR<14> by 1 every read/write cycle(2)
- 00 = No increment or decrement of address

bit 10 **Unimplemented:** Read as ‘0’

bit 9-8 **MODE<1:0>:** Parallel Port Mode Select bits
- 11 = Master mode 1 (PMCS1, PMRD/PMWR, PMENB, PMA<x:0>, and PMD<7:0>)
- 10 = Master mode 2 (PMCS1, PMRD, PMWR, PMA<x:0>, and PMD<7:0>)
- 01 = Enhanced Slave mode, control signals (PMRD, PMWR, PMCS1, PMD<7:0>, and PMA<1:0>)
- 00 = Legacy Parallel Slave Port, control signals (PMRD, PMWR, PMCS1, and PMD<7:0>)

bit 7-6 **WAITB<1:0>:** Data Setup to Read/Write Strobe Wait States bits(1)
- 11 = Data wait of 4 TPB; multiplexed address phase of 4 TPB
- 10 = Data wait of 3 TPB; multiplexed address phase of 3 TPB
- 01 = Data wait of 2 TPB; multiplexed address phase of 2 TPB
- 00 = Data wait of 1 TPB; multiplexed address phase of 1 TPB (default)

Note 1: Whenever WAITM<3:0> = 0000, WAITB and WAITE bits are ignored and forced to 1 TPBCLK cycle for a write operation; WAITB = 1 TPBCLK cycle, WAITE = 0 TPBCLK cycles for a read operation.

2: Address bit A14 is not subject to auto-increment/decrement if configured as Chip Select CS1.

© 2009-2013 Microchip Technology Inc.

REGISTER 20-2: PMMODE: PARALLEL PORT MODE REGISTER (CONTINUED)

bit 5-2 **WAITM<3:0>:** Data Read/Write Strobe Wait States bits[(1)]

1111 = Wait of 16 TPB

•

•

•

0001 = Wait of 2 TPB

0000 = Wait of 1 TPB (default)

bit 1-0 **WAITE<1:0>:** Data Hold After Read/Write Strobe Wait States bits[(1)]

11 = Wait of 4 TPB

10 = Wait of 3 TPB

01 = Wait of 2 TPB

00 = Wait of 1 TPB (default)

For Read operations:

11 = Wait of 3 TPB

10 = Wait of 2 TPB

01 = Wait of 1 TPB

00 = Wait of 0 TPB (default)

Note 1: Whenever WAITM<3:0> = 0000, WAITB and WAITE bits are ignored and forced to 1 TPBCLK cycle for a write operation; WAITB = 1 TPBCLK cycle, WAITE = 0 TPBCLK cycles for a read operation.

2: Address bit A14 is not subject to auto-increment/decrement if configured as Chip Select CS1.

REGISTER 20-3: PMADDR: PARALLEL PORT ADDRESS REGISTER

Bit Range	Bit 31/23/15/7	Bit 30/22/14/6	Bit 29/21/13/5	Bit 28/20/12/4	Bit 27/19/11/3	Bit 26/18/10/2	Bit 25/17/9/1	Bit 24/16/8/0
31:24	U-0	U-0	U-0	U-0	U-0	U-0	U-0	U-0
	—	—	—	—	—	—	—	—
23:16	U-0	U-0	U-0	U-0	U-0	U-0	U-0	U-0
	—	—	—	—	—	—	—	—
15:8	U-0	R/W-0	U-0	U-0	U-0	R/W-0	R/W-0	R/W-0
	—	CS1	—	—	—	ADDR<10:8>		
7:0	R/W-0	R/W-0	R/W-0	R/W-0	R/W-0	R/W-0	R/W-0	R/W-0
	ADDR<7:0>							

Legend:			
R = Readable bit	W = Writable bit	U = Unimplemented bit, read as ‘0’	
-n = Value at POR	‘1’ = Bit is set	‘0’ = Bit is cleared	x = Bit is unknown

bit 31-15 **Unimplemented:** Read as ‘0’

bit 14 **CS1:** Chip Select 1 bit
1 = Chip Select 1 is active
0 = Chip Select 1 is inactive (pin functions as PMA<14>)

bit 13-11 **Unimplemented:** Read as ‘0’

bit 10-0 **ADDR<10:0>:** Destination Address bits

© 2009-2013 Microchip Technology Inc.

REGISTER 20-4: PMAEN: PARALLEL PORT PIN ENABLE REGISTER

Bit Range	Bit 31/23/15/7	Bit 30/22/14/6	Bit 29/21/13/5	Bit 28/20/12/4	Bit 27/19/11/3	Bit 26/18/10/2	Bit 25/17/9/1	Bit 24/16/8/0
31:24	U-0	U-0	U-0	U-0	U-0	U-0	U-0	U-0
	—	—	—	—	—	—	—	—
23:16	U-0	U-0	U-0	U-0	U-0	U-0	U-0	U-0
	—	—	—	—	—	—	—	—
15:8	U-0	R/W-0	U-0	U-0	U-0	R/W-0	R/W-0	R/W-0
	—	PTEN14	—	—	—	PTEN<10:8>		
7:0	R/W-0	R/W-0	R/W-0	R/W-0	R/W-0	R/W-0	R/W-0	R/W-0
	PTEN<7:0>							

Legend:			
R = Readable bit	W = Writable bit	U = Unimplemented bit, read as ‘0’	
-n = Value at POR	‘1’ = Bit is set	‘0’ = Bit is cleared	x = Bit is unknown

bit 31-15 **Unimplemented:** Read as ‘0’

bit 15-14 **PTEN14:** PMCS1 Strobe Enable bits
1 = PMA14 functions as either PMA14 or PMCS1(1)
0 = PMA14 functions as port I/O

bit 13-11 **Unimplemented:** Read as ‘0’

bit 10-2 **PTEN<10:2>:** PMP Address Port Enable bits
1 = PMA<10:2> function as PMP address lines
0 = PMA<10:2> function as port I/O

bit 1-0 **PTEN<1:0>:** PMALH/PMALL Strobe Enable bits
1 = PMA1 and PMA0 function as either PMA<1:0> or PMALH and PMALL(2)
0 = PMA1 and PMA0 pads function as port I/O

Note 1: The use of this pin as PMA14 or CS1 is selected by the CSF<1:0> bits in the PMCON register.
2: The use of these pins as PMA1/PMA0 or PMALH/PMALL depends on the Address/Data Multiplex mode selected by bits ADRMUX<1:0> in the PMCON register.

REGISTER 20-5: PMSTAT: PARALLEL PORT STATUS REGISTER (ONLY SLAVE MODES)

Bit Range	Bit 31/23/15/7	Bit 30/22/14/6	Bit 29/21/13/5	Bit 28/20/12/4	Bit 27/19/11/3	Bit 26/18/10/2	Bit 25/17/9/1	Bit 24/16/8/0
31:24	U-0	U-0	U-0	U-0	U-0	U-0	U-0	U-0
	—	—	—	—	—	—	—	—
23:16	U-0	U-0	U-0	U-0	U-0	U-0	U-0	U-0
	—	—	—	—	—	—	—	—
15:8	R-0	R/W-0, HSC	U-0	U-0	R-0	R-0	R-0	R-0
	IBF	IBOV	—	—	IB3F	IB2F	IB1F	IB0F
7:0	R-1	R/W-0, HSC	U-0	U-0	R-1	R-1	R-1	R-1
	OBE	OBUF	—	—	OB3E	OB2E	OB1E	OB0E

Legend:	HSC = Set by Hardware; Cleared by Software		
R = Readable bit	W = Writable bit	U = Unimplemented bit, read as ‘0’	
-n = Value at POR	‘1’ = Bit is set	‘0’ = Bit is cleared	x = Bit is unknown

bit 31-16 **Unimplemented:** Read as ‘0’

bit 15 **IBF:** Input Buffer Full Status bit
- 1 = All writable input buffer registers are full
- 0 = Some or all of the writable input buffer registers are empty

bit 14 **IBOV:** Input Buffer Overflow Status bit
- 1 = A write attempt to a full input byte buffer occurred (must be cleared in software)
- 0 = An overflow has not occurred

bit 13-12 **Unimplemented:** Read as ‘0’

bit 11-8 **IBxF:** Input Buffer ‘x’ Status Full bits
- 1 = Input buffer contains data that has not been read (reading buffer will clear this bit)
- 0 = Input buffer does not contain any unread data

bit 7 **OBE:** Output Buffer Empty Status bit
- 1 = All readable output buffer registers are empty
- 0 = Some or all of the readable output buffer registers are full

bit 6 **OBUF:** Output Buffer Underflow Status bit
- 1 = A read occurred from an empty output byte buffer (must be cleared in software)
- 0 = An underflow has not occurred

bit 5-4 **Unimplemented:** Read as ‘0’

bit 3-0 **OBxE:** Output Buffer ‘x’ Status Empty bits
- 1 = Output buffer is empty (writing data to the buffer will clear this bit)
- 0 = Output buffer contains data that has not been transmitted

© 2009-2013 Microchip Technology Inc.

21.0 REAL-TIME CLOCK AND CALENDAR (RTCC)

Note 1: This data sheet summarizes the features of the PIC32MX5XX/6XX/7XX family of devices. It is not intended to be a comprehensive reference source. To complement the information in this data sheet, refer to **Section 29. "Real-Time Clock and Calendar (RTCC)"** (DS60001125) in the *"PIC32 Family Reference Manual"*, which is available from the Microchip web site (www.microchip.com/PIC32).

2: Some registers and associated bits described in this section may not be available on all devices. Refer to **Section 4.0 "Memory Organization"** in this data sheet for device-specific register and bit information.

The PIC32 RTCC module is intended for applications in which accurate time must be maintained for extended periods of time with minimal or no CPU intervention. Low-power optimization provides extended battery lifetime while keeping track of time. A simplified block diagram of the RTCC module is illustrated in Figure 21-1.

Key features of the RTCC module include:

- Time: hours, minutes and seconds
- 24-hour format (military time)
- Visibility of one-half second period
- Provides calendar: Weekday, date, month and year
- Alarm intervals are configurable for half of a second, one second, 10 seconds, one minute, 10 minutes, one hour, one day, one week, one month and one year
- Alarm repeat with decrementing counter
- Alarm with indefinite repeat: Chime
- Year range: 2000 to 2099
- Leap year correction
- BCD format for smaller firmware overhead
- Optimized for long-term battery operation
- Fractional second synchronization
- User calibration of the clock crystal frequency with auto-adjust
- Calibration range: ±0.66 seconds error per month
- Calibrates up to 260 ppm of crystal error
- Requirements: External 32.768 kHz clock crystal
- Alarm pulse or seconds clock output on RTCC pin

FIGURE 21-1: RTCC BLOCK DIAGRAM

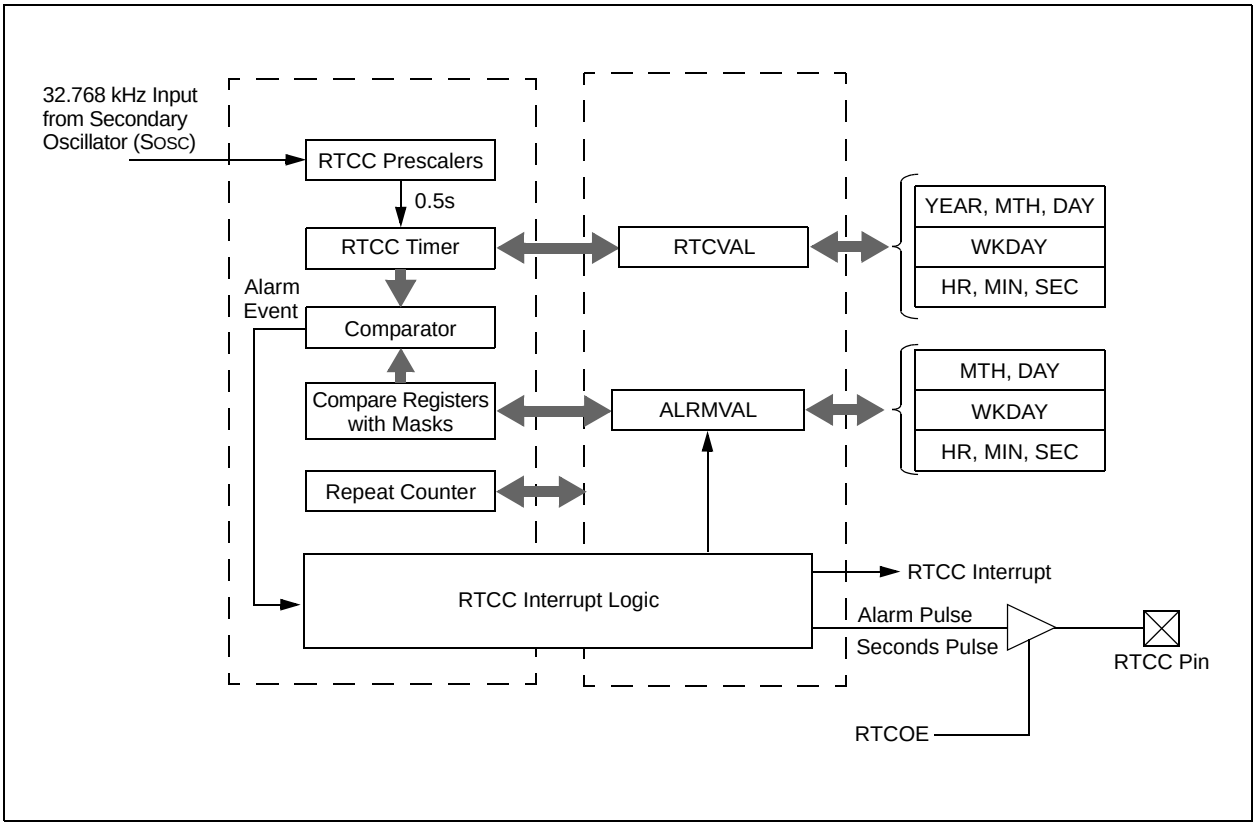

21.1 Control Registers

REGISTER 21-1: RTCCON: RTC CONTROL REGISTER

Bit Range	Bit 31/23/15/7	Bit 30/22/14/6	Bit 29/21/13/5	Bit 28/20/12/4	Bit 27/19/11/3	Bit 26/18/10/2	Bit 25/17/9/1	Bit 24/16/8/0
31:24	U-0	U-0	U-0	U-0	U-0	U-0	R/W-0	R/W-0
	—	—	—	—	—	—	CAL<9:8>	
23:16	R/W-0	R/W-0	R/W-0	R/W-0	R/W-0	R/W-0	R/W-0	R/W-0
	CAL<7:0>							
15:8	R/W-0	U-0	R/W-0	U-0	U-0	U-0	U-0	U-0
	ON(1,2)	—	SIDL	—	—	—	—	—
7:0	R/W-0	R-0	U-0	U-0	R/W-0	R-0	R-0	R/W-0
	RTSECSEL(3)	RTCCLKON	—	—	RTCWREN(4)	RTCSYNC	HALFSEC(5)	RTCOE

Legend:			
R = Readable bit	W = Writable bit	U = Unimplemented bit, read as ‘0’	
-n = Value at POR	‘1’ = Bit is set	‘0’ = Bit is cleared	x = Bit is unknown

bit 31-26 **Unimplemented:** Read as ‘0’

bit 25-16 **CAL<9:0>:** RTC Drift Calibration bits, which contain a signed 10-bit integer value

1111111111 = Minimum negative adjustment, subtracts 1 RTC clock pulse every one minute
•
•
•
1000000000 = Minimum negative adjustment, subtracts 512 clock pulses every one minute
0111111111 = Maximum positive adjustment, adds 511 RTC clock pulses every one minute
•
•
•
0000000001 = Minimum positive adjustment, adds 1 RTC clock pulse every one minute
0000000000 = No adjustment

bit 15 **ON:** RTCC On bit(1,2)

1 = RTCC module is enabled
0 = RTCC module is disabled

bit 14 **Unimplemented:** Read as ‘0’

bit 13 **SIDL:** Stop in Idle Mode bit

1 = Disables the PBCLK to the RTCC when CPU enters in Idle mode
0 = Continue normal operation in Idle mode

bit 12-8 **Unimplemented:** Read as ‘0’

bit 7 **RTSECSEL:** RTCC Seconds Clock Output Select bit(3)

1 = RTCC Seconds Clock is selected for the RTCC pin
0 = RTCC Alarm Pulse is selected for the RTCC pin

bit 6 **RTCCLKON:** RTCC Clock Enable Status bit

1 = RTCC Clock is actively running
0 = RTCC Clock is not running

bit 5-4 **Unimplemented:** Read as ‘0’

Note 1: The ON bit is only writable when RTCWREN = 1.

2: When using the 1:1 PBCLK divisor, the user’s software should not read/write the peripheral’s SFRs in the SYSCLK cycle immediately following the instruction that clears the module’s ON bit.

3: Requires RTCOE = 1 (RTCCON<0>) for the output to be active.

4: The RTCWREN bit can only be set when the write sequence is enabled.

5: This bit is read-only. It is cleared to ‘0’ on a write to the seconds bit fields (RTCTIME<14:8>).

Note: This register is only reset on a Power-on Reset (POR).

© 2009-2013 Microchip Technology Inc.

REGISTER 21-1: RTCCON: RTC CONTROL REGISTER (CONTINUED)

bit 3 **RTCWREN:** RTC Value Registers Write Enable bit(4)

1 = RTC Value registers can be written to by the user
0 = RTC Value registers are locked out from being written to by the user

bit 2 **RTCSYNC:** RTCC Value Registers Read Synchronization bit

1 = RTC Value registers can change while reading, due to a rollover ripple that results in an invalid data read. If the register is read twice and results in the same data, the data can be assumed to be valid.
0 = RTC Value registers can be read without concern about a rollover ripple

bit 1 **HALFSEC:** Half-Second Status bit(5)

1 = Second half period of a second
0 = First half period of a second

bit 0 **RTCOE:** RTCC Output Enable bit

1 = RTCC clock output is enabled (clock presented onto an I/O)
0 = RTCC clock output is disabled

Note 1: The ON bit is only writable when RTCWREN = 1.

2: When using the 1:1 PBCLK divisor, the user's software should not read/write the peripheral's SFRs in the SYSCLK cycle immediately following the instruction that clears the module's ON bit.

3: Requires RTCOE = 1 (RTCCON<0>) for the output to be active.

4: The RTCWREN bit can only be set when the write sequence is enabled.

5: This bit is read-only. It is cleared to '0' on a write to the seconds bit fields (RTCTIME<14:8>).

Note: This register is only reset on a Power-on Reset (POR).

REGISTER 21-2: RTCALRM: RTC ALARM CONTROL REGISTER

Bit Range	Bit 31/23/15/7	Bit 30/22/14/6	Bit 29/21/13/5	Bit 28/20/12/4	Bit 27/19/11/3	Bit 26/18/10/2	Bit 25/17/9/1	Bit 24/16/8/0
31:24	U-0	U-0	U-0	U-0	U-0	U-0	U-0	U-0
	—	—	—	—	—	—	—	—
23:16	U-0	U-0	U-0	U-0	U-0	U-0	U-0	U-0
	—	—	—	—	—	—	—	—
15:8	R/W-0	R/W-0	R/W-0	R-0	R/W-0	R/W-0	R/W-0	R/W-0
	ALRMEN(1,2)	CHIME(2)	PIV(2)	ALRMSYNC(3)	AMASK<3:0>(2)			
7:0	R/W-0	R/W-0	R/W-0	R/W-0	R/W-0	R/W-0	R/W-0	R/W-0
	ARPT<7:0>(2)							

Legend:			
R = Readable bit	W = Writable bit	U = Unimplemented bit, read as ‘0’	
-n = Value at POR	‘1’ = Bit is set	‘0’ = Bit is cleared	x = Bit is unknown

bit 31-16 **Unimplemented:** Read as ‘0’

bit 15 **ALRMEN:** Alarm Enable bit(1,2)
1 = Alarm is enabled
0 = Alarm is disabled

bit 14 **CHIME:** Chime Enable bit(2)
1 = Chime is enabled – ARPT<7:0> is allowed to rollover from 0x00 to 0xFF
0 = Chime is disabled – ARPT<7:0> stops once it reaches 0x00

bit 13 **PIV:** Alarm Pulse Initial Value bit(3)
When ALRMEN = 0, PIV is writable and determines the initial value of the Alarm Pulse.
When ALRMEN = 1, PIV is read-only and returns the state of the Alarm Pulse.

bit 12 **ALRMSYNC:** Alarm Sync bit(3)
1 = ARPT<7:0> and ALRMEN may change as a result of a half second rollover during a read. The ARPT must be read repeatedly until the same value is read twice. This must be done since multiple bits may be changing, which are then synchronized to the PB clock domain.
0 = ARPT<7:0> and ALRMEN can be read without concerns of rollover because the prescaler is > 32 RTC clocks away from a half-second rollover

bit 11-8 **AMASK<3:0>:** Alarm Mask Configuration bits(2)
1111 = Reserved
.
.
.
1010 = Reserved
1001 = Once a year (except when configured for February 29, once every four years)
1000 = Once a month
0111 = Once a week
0110 = Once a day
0101 = Every hour
0100 = Every 10 minutes
0011 = Every minute
0010 = Every 10 seconds
0001 = Every second
0000 = Every half-second

Note 1: Hardware clears the ALRMEN bit anytime the alarm event occurs, when ARPT<7:0> = 00 and CHIME = 0.
2: This field should not be written when the RTCC ON bit = ‘1’ (RTCCON<15>) and ALRMSYNC = 1.
3: This assumes a CPU read will execute in less than 32 PBCLKs.

Note: This register is only reset on a Power-on Reset (POR).

© 2009-2013 Microchip Technology Inc.

REGISTER 21-2: RTCALRM: RTC ALARM CONTROL REGISTER (CONTINUED)

bit 7-0 **ARPT<7:0>:** Alarm Repeat Counter Value bits[(2)]

`11111111` = Alarm will trigger 256 times

•

•

•

`00000000` = Alarm will trigger one time

The counter decrements on any alarm event. The counter only rolls over from 0x00 to 0xFF if CHIME = `1`.

Note 1: Hardware clears the ALRMEN bit anytime the alarm event occurs, when ARPT<7:0> = `00` and CHIME = `0`.

2: This field should not be written when the RTCC ON bit = ‘1’ (RTCCON<15>) and ALRMSYNC = `1`.

3: This assumes a CPU read will execute in less than 32 PBCLKs.

Note: This register is only reset on a Power-on Reset (POR).

REGISTER 21-3: RTCTIME: RTC TIME VALUE REGISTER

Bit Range	Bit 31/23/15/7	Bit 30/22/14/6	Bit 29/21/13/5	Bit 28/20/12/4	Bit 27/19/11/3	Bit 26/18/10/2	Bit 25/17/9/1	Bit 24/16/8/0
31:24	R/W-x	R/W-x	R/W-x	R/W-x	R/W-x	R/W-x	R/W-x	R/W-x
	HR10<3:0>				HR01<3:0>			
23:16	R/W-x	R/W-x	R/W-x	R/W-x	R/W-x	R/W-x	R/W-x	R/W-x
	MIN10<3:0>				MIN01<3:0>			
15:8	R/W-x	R/W-x	R/W-x	R/W-x	R/W-x	R/W-x	R/W-x	R/W-x
	SEC10<3:0>				SEC01<3:0>			
7:0	U-0	U-0	U-0	U-0	U-0	U-0	U-0	U-0
	—	—	—	—	—	—	—	—

Legend:			
R = Readable bit	W = Writable bit	U = Unimplemented bit, read as ‘0’	
-n = Value at POR	‘1’ = Bit is set	‘0’ = Bit is cleared	x = Bit is unknown

bit 31-28 **HR10<3:0>:** Binary-Coded Decimal Value of Hours bits, 10 digits; contains a value from 0 to 2

bit 27-24 **HR01<3:0>:** Binary-Coded Decimal Value of Hours bits, 1 digit; contains a value from 0 to 9

bit 23-20 **MIN10<3:0>:** Binary-Coded Decimal Value of Minutes bits, 10 digits; contains a value from 0 to 5

bit 19-16 **MIN01<3:0>:** Binary-Coded Decimal Value of Minutes bits, 1 digit; contains a value from 0 to 9

bit 15-12 **SEC10<3:0>:** Binary-Coded Decimal Value of Seconds bits, 10 digits; contains a value from 0 to 5

bit 11-8 **SEC01<3:0>:** Binary-Coded Decimal Value of Seconds bits, 1 digit; contains a value from 0 to 9

bit 7-0 **Unimplemented:** Read as ‘0’

Note: This register is only writable when RTCWREN = 1 (RTCCON<3>).

© 2009-2013 Microchip Technology Inc.

REGISTER 21-4: RTCDATE: RTC DATE VALUE REGISTER

Bit Range	Bit 31/23/15/7	Bit 30/22/14/6	Bit 29/21/13/5	Bit 28/20/12/4	Bit 27/19/11/3	Bit 26/18/10/2	Bit 25/17/9/1	Bit 24/16/8/0
31:24	R/W-x	R/W-x	R/W-x	R/W-x	R/W-x	R/W-x	R/W-x	R/W-x
	YEAR10<3:0>				YEAR01<3:0>			
23:16	R/W-x	R/W-x	R/W-x	R/W-x	R/W-x	R/W-x	R/W-x	R/W-x
	MONTH10<3:0>				MONTH01<3:0>			
15:8	R/W-x	R/W-x	R/W-x	R/W-x	R/W-x	R/W-x	R/W-x	R/W-x
	DAY10<3:0>				DAY01<3:0>			
7:0	U-0	U-0	U-0	U-0	R/W-x	R/W-x	R/W-x	R/W-x
	—	—	—	—	WDAY01<3:0>			

Legend:			
R = Readable bit	W = Writable bit	U = Unimplemented bit, read as ‘0’	
-n = Value at POR	‘1’ = Bit is set	‘0’ = Bit is cleared	x = Bit is unknown

bit 31-28 **YEAR10<3:0>:** Binary-Coded Decimal Value of Years bits, 10 digits

bit 27-24 **YEAR01<3:0>:** Binary-Coded Decimal Value of Years bits, 1 digit

bit 23-20 **MONTH10<3:0>:** Binary-Coded Decimal Value of Months bits, 10 digits; contains a value from 0 to 1

bit 19-16 **MONTH01<3:0>:** Binary-Coded Decimal Value of Months bits, 1 digit; contains a value from 0 to 9

bit 15-12 **DAY10<3:0>:** Binary-Coded Decimal Value of Days bits, 10 digits; contains a value from 0 to 3

bit 11-8 **DAY01<3:0>:** Binary-Coded Decimal Value of Days bits, 1 digit; contains a value from 0 to 9

bit 7-4 **Unimplemented:** Read as ‘0’

bit 3-0 **WDAY01<3:0>:** Binary-Coded Decimal Value of Weekdays bits,1 digit; contains a value from 0 to 6

Note: This register is only writable when RTCWREN = 1 (RTCCON<3>).

REGISTER 21-5: ALRMTIME: ALARM TIME VALUE REGISTER

Bit Range	Bit 31/23/15/7	Bit 30/22/14/6	Bit 29/21/13/5	Bit 28/20/12/4	Bit 27/19/11/3	Bit 26/18/10/2	Bit 25/17/9/1	Bit 24/16/8/0
31:24	R/W-x	R/W-x	R/W-x	R/W-x	R/W-x	R/W-x	R/W-x	R/W-x
	HR10<3:0>				HR01<3:0>			
23:16	R/W-x	R/W-x	R/W-x	R/W-x	R/W-x	R/W-x	R/W-x	R/W-x
	MIN10<3:0>				MIN01<3:0>			
15:8	R/W-x	R/W-x	R/W-x	R/W-x	R/W-x	R/W-x	R/W-x	R/W-x
	SEC10<3:0>				SEC01<3:0>			
7:0	U-0	U-0	U-0	U-0	U-0	U-0	U-0	U-0
	—	—	—	—	—	—	—	—

Legend:			
R = Readable bit	W = Writable bit	U = Unimplemented bit, read as ‘0’	
-n = Value at POR	‘1’ = Bit is set	‘0’ = Bit is cleared	x = Bit is unknown

bit 31-28 **HR10<3:0>:** Binary Coded Decimal value of hours bits, 10 digits; contains a value from 0 to 2

bit 27-24 **HR01<3:0>:** Binary Coded Decimal value of hours bits, 1 digit; contains a value from 0 to 9

bit 23-20 **MIN10<3:0>:** Binary Coded Decimal value of minutes bits, 10 digits; contains a value from 0 to 5

bit 19-16 **MIN01<3:0>:** Binary Coded Decimal value of minutes bits, 1 digit; contains a value from 0 to 9

bit 15-12 **SEC10<3:0>:** Binary Coded Decimal value of seconds bits, 10 digits; contains a value from 0 to 5

bit 11-8 **SEC01<3:0>:** Binary Coded Decimal value of seconds bits, 1 digit; contains a value from 0 to 9

bit 7-0 **Unimplemented:** Read as ‘0’

© 2009-2013 Microchip Technology Inc.

REGISTER 21-6: ALRMDATE: ALARM DATE VALUE REGISTER

Bit Range	Bit 31/23/15/7	Bit 30/22/14/6	Bit 29/21/13/5	Bit 28/20/12/4	Bit 27/19/11/3	Bit 26/18/10/2	Bit 25/17/9/1	Bit 24/16/8/0
31:24	U-0	U-0	U-0	U-0	U-0	U-0	U-0	U-0
	—	—	—	—	—	—	—	—
23:16	R/W-x	R/W-x	R/W-x	R/W-x	R/W-x	R/W-x	R/W-x	R/W-x
	MONTH10<3:0>				MONTH01<3:0>			
15:8	R/W-x	R/W-x	R/W-x	R/W-x	R/W-x	R/W-x	R/W-x	R/W-x
	DAY10<1:0>				DAY01<3:0>			
7:0	U-0	U-0	U-0	U-0	R/W-x	R/W-x	R/W-x	R/W-x
	—	—	—	—	WDAY01<3:0>			

Legend:			
R = Readable bit	W = Writable bit	U = Unimplemented bit, read as ‘0’	
-n = Value at POR	‘1’ = Bit is set	‘0’ = Bit is cleared	x = Bit is unknown

bit 31-24 **Unimplemented:** Read as ‘0’

bit 23-20 **MONTH10<3:0>:** Binary Coded Decimal value of months bits, 10 digits; contains a value from 0 to 1

bit 19-16 **MONTH01<3:0>:** Binary Coded Decimal value of months bits, 1 digit; contains a value from 0 to 9

bit 15-12 **DAY10<3:0>:** Binary Coded Decimal value of days bits, 10 digits; contains a value from 0 to 3

bit 11-8 **DAY01<3:0>:** Binary Coded Decimal value of days bits, 1 digit; contains a value from 0 to 9

bit 7-4 **Unimplemented:** Read as ‘0’

bit 3-0 **WDAY01<3:0>:** Binary Coded Decimal value of weekdays bits, 1 digit; contains a value from 0 to 6

NOTES:

© 2009-2013 Microchip Technology Inc.

22.0 10-BIT ANALOG-TO-DIGITAL CONVERTER (ADC)

Note 1: This data sheet summarizes the features of the PIC32MX5XX/6XX/7XX family of devices. It is not intended to be a comprehensive reference source. To complement the information in this data sheet, refer to **Section 17. "10-bit Analog-to-Digital Converter (ADC)"** (DS60001104) in the *"PIC32 Family Reference Manual"*, which is available from the Microchip web site (www.microchip.com/PIC32).

2: Some registers and associated bits described in this section may not be available on all devices. Refer to **Section 4.0 "Memory Organization"** in this data sheet for device-specific register and bit information.

The PIC32MX5XX/6XX/7XX 10-bit Analog-to-Digital Converter (ADC) includes the following features:

- Successive Approximation Register (SAR) conversion
- Up to 1 Msps conversion speed
- Up to 16 analog input pins
- External voltage reference input pins
- One unipolar, differential Sample and Hold (S&H) circuit
- Automatic Channel Scan mode
- Selectable conversion trigger source
- 16-word conversion result buffer
- Selectable buffer fill modes
- Eight conversion result format options
- Operation during Sleep and Idle modes

A block diagram of the 10-bit ADC is illustrated in Figure 22-1. The 10-bit ADC has up to 16 analog input pins, designated AN0-AN15. In addition, there are two analog input pins for external voltage reference connections. These voltage reference inputs may be shared with other analog input pins and may be common to other analog module references.

The analog inputs are connected through two multiplexers (MUXs) to one S&H. The analog input MUXs can be switched between two sets of analog inputs between conversions. Unipolar differential conversions are possible on all channels, other than the pin used as the reference, using a reference input pin (see Figure 22-1).

The Analog Input Scan mode sequentially converts user-specified channels. A control register specifies which analog input channels will be included in the scanning sequence.

The 10-bit ADC is connected to a 16-word result buffer. Each 10-bit result is converted to one of eight 32-bit output formats when it is read from the result buffer.

FIGURE 22-1: ADC1 MODULE BLOCK DIAGRAM

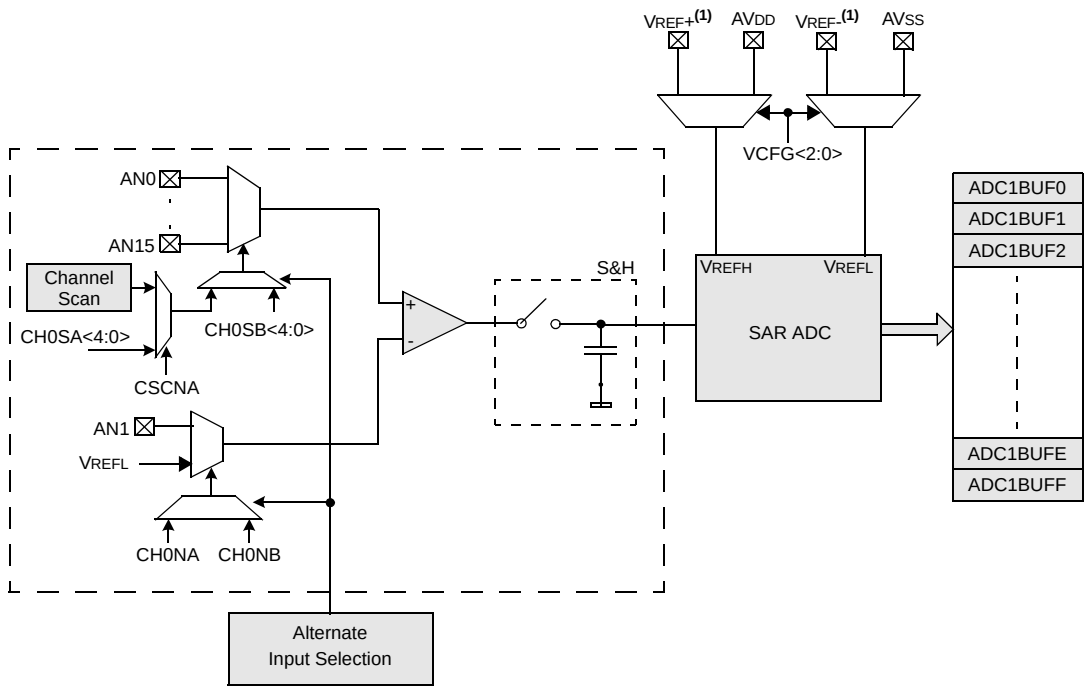

Note 1: VREF+ and VREF- inputs can be multiplexed with other analog inputs.

FIGURE 22-2: ADC CONVERSION CLOCK PERIOD BLOCK DIAGRAM

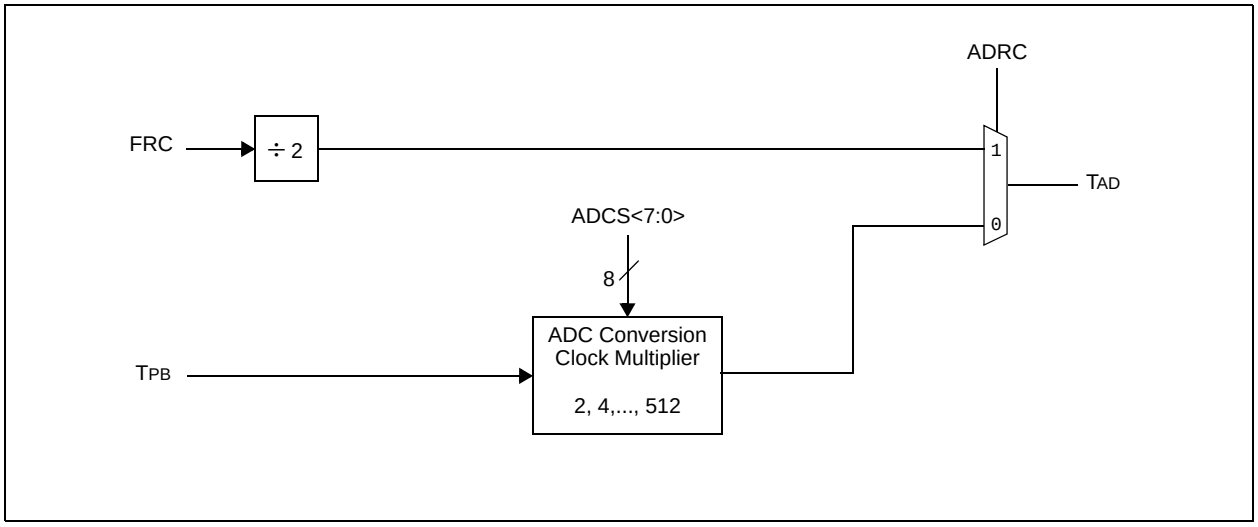

© 2009-2013 Microchip Technology Inc.

22.1 Control Registers

REGISTER 22-1: AD1CON1: ADC CONTROL REGISTER 1

Bit Range	Bit 31/23/15/7	Bit 30/22/14/6	Bit 29/21/13/5	Bit 28/20/12/4	Bit 27/19/11/3	Bit 26/18/10/2	Bit 25/17/9/1	Bit 24/16/8/0
31:24	U-0	U-0	U-0	U-0	U-0	U-0	U-0	U-0
	—	—	—	—	—	—	—	—
23:16	U-0	U-0	U-0	U-0	U-0	U-0	U-0	U-0
	—	—	—	—	—	—	—	—
15:8	R/W-0	U-0	R/W-0	U-0	U-0	R/W-0	R/W-0	R/W-0
	ON(1)	—	SIDL	—	—	FORM<2:0>		
7:0	R/W-0	R/W-0	R/W-0	R/W-0	U-0	R/W-0	R/W-0, HSC	R/C-0, HSC
	SSRC<2:0>			CLRASAM	—	ASAM	SAMP(2)	DONE(3)

Legend:			
R = Readable bit	W = Writable bit	U = Unimplemented bit, read as ‘0’	
-n = Value at POR	‘1’ = Bit is set	‘0’ = Bit is cleared	x = Bit is unknown

bit 31-16 **Unimplemented:** Read as ‘0’

bit 15 **ON:** ADC Operating Mode bit(1)
- 1 = ADC module is operating
- 0 = ADC module is not operating

bit 14 **Unimplemented:** Read as ‘0’

bit 13 **SIDL:** Stop in Idle Mode bit
- 1 = Discontinue module operation when device enters Idle mode
- 0 = Continue module operation in Idle mode

bit 12-11 **Unimplemented:** Read as ‘0’

bit 10-8 **FORM<2:0>:** Data Output Format bits
- 111 = Signed Fractional 32-bit (DOUT = sddd dddd dd00 0000 0000 0000 0000)
- 110 = Fractional 32-bit (DOUT = dddd dddd dd00 0000 0000 0000 0000 0000)
- 101 = Signed Integer 32-bit (DOUT = ssss ssss ssss ssss ssss sssd dddd dddd)
- 100 = Integer 32-bit (DOUT = 0000 0000 0000 0000 0000 00dd dddd dddd)
- 011 = Signed Fractional 16-bit (DOUT = 0000 0000 0000 0000 sddd dddd dd00 0000)
- 010 = Fractional 16-bit (DOUT = 0000 0000 0000 0000 dddd dddd dd00 0000)
- 001 = Signed Integer 16-bit (DOUT = 0000 0000 0000 0000 ssss sssd dddd dddd)
- 000 = Integer 16-bit (DOUT = 0000 0000 0000 0000 0000 00dd dddd dddd)

Note 1: When using the 1:1 PBCLK divisor, the user’s software should not read/write the peripheral’s SFRs in the SYSCLK cycle immediately following the instruction that clears the module’s ON bit.

2: If ASAM = 0, software can write a ‘1’ to start sampling. This bit is automatically set by hardware if ASAM = 1. If SSRC<2:0> = 000, software can write a ‘0’ to end sampling and start conversion. If SSRC<2:0> ≠ ‘000’, this bit is automatically cleared by hardware to end sampling and start conversion.

3: This bit is automatically set by hardware when analog-to-digital conversion is complete. Software can write a ‘0’ to clear this bit (a write of ‘1’ is not allowed). Clearing this bit does not affect any operation already in progress. This bit is automatically cleared by hardware at the start of a new conversion.

REGISTER 22-1: AD1CON1: ADC CONTROL REGISTER 1 (CONTINUED)

bit 7-5 **SSRC<2:0>:** Conversion Trigger Source Select bits

111 = Internal counter ends sampling and starts conversion (auto convert)
110 = Reserved
101 = Reserved
100 = Reserved
011 = CTMU ends sampling and starts conversion
010 = Timer 3 period match ends sampling and starts conversion
001 = Active transition on INT0 pin ends sampling and starts conversion
000 = Clearing the SAMP bit ends sampling and starts conversion

bit 4 **CLRASAM:** Stop Conversion Sequence bit (when the first ADC interrupt is generated)

1 = Stop conversions when the first ADC interrupt is generated. Hardware clears the ASAM bit when the ADC interrupt is generated.
0 = Normal operation, buffer contents will be overwritten by the next conversion sequence

bit 3 **Unimplemented:** Read as '0'

bit 2 **ASAM:** ADC Sample Auto-Start bit

1 = Sampling begins immediately after last conversion completes; SAMP bit is automatically set
0 = Sampling begins when SAMP bit is set

bit 1 **SAMP:** ADC Sample Enable bit(2)

1 = The ADC S&H circuit is sampling
0 = The ADC S&H circuit is holding
When ASAM = 0, writing '1' to this bit starts sampling.
When SSRC<2:0> = 000, writing '0' to this bit will end sampling and start conversion.

bit 0 **DONE:** Analog-to-Digital Conversion Status bit(3)

Clearing this bit will not affect any operation in progress.

1 = Analog-to-digital conversion is done
0 = Analog-to-digital conversion is not done or has not started

Note 1: When using the 1:1 PBCLK divisor, the user's software should not read/write the peripheral's SFRs in the SYSCLK cycle immediately following the instruction that clears the module's ON bit.

2: If ASAM = 0, software can write a '1' to start sampling. This bit is automatically set by hardware if ASAM = 1. If SSRC<2:0> = 000, software can write a '0' to end sampling and start conversion. If SSRC<2:0> ≠ '000', this bit is automatically cleared by hardware to end sampling and start conversion.

3: This bit is automatically set by hardware when analog-to-digital conversion is complete. Software can write a '0' to clear this bit (a write of '1' is not allowed). Clearing this bit does not affect any operation already in progress. This bit is automatically cleared by hardware at the start of a new conversion.

© 2009-2013 Microchip Technology Inc.

REGISTER 22-2: AD1CON2: ADC CONTROL REGISTER 2

Bit Range	Bit 31/23/15/7	Bit 30/22/14/6	Bit 29/21/13/5	Bit 28/20/12/4	Bit 27/19/11/3	Bit 26/18/10/2	Bit 25/17/9/1	Bit 24/16/8/0
31:24	U-0	U-0	U-0	U-0	U-0	U-0	U-0	U-0
	—	—	—	—	—	—	—	—
23:16	U-0	U-0	U-0	U-0	U-0	U-0	U-0	U-0
	—	—	—	—	—	—	—	—
15:8	R/W-0	R/W-0	R/W-0	R/W-0	U-0	R/W-0	U-0	U-0
	VCFG<2:0>			OFFCAL	—	CSCNA	—	—
7:0	R-0	U-0	R/W-0	R/W-0	R/W-0	R/W-0	R/W-0	R/W-0
	BUFS	—	SMPI<3:0>				BUFM	ALTS

Legend:			
R = Readable bit	W = Writable bit	U = Unimplemented bit, read as ‘0’	
-n = Value at POR	‘1’ = Bit is set	‘0’ = Bit is cleared	x = Bit is unknown

bit 31-16 **Unimplemented:** Read as ‘0’

bit 15-13 **VCFG<2:0>:** Voltage Reference Configuration bits

Bit Value	VREFH	VREFL
1xx	AVDD	AVss
011	External VREF+ pin	External VREF- pin
010	AVDD	External VREF- pin
001	External VREF+ pin	AVSS
000	AVDD	AVss

bit 12 **OFFCAL:** Input Offset Calibration Mode Select bit
1 = Enable Offset Calibration mode
Positive and negative inputs of the S&H circuit are connected to VREFL.
0 = Disable Offset Calibration mode
The inputs to the S&H circuit are controlled by AD1CHS or AD1CSSL.

bit 11 **Unimplemented:** Read as ‘0’

bit 10 **CSCNA:** Input Scan Select bit
1 = Scan inputs
0 = Do not scan inputs

bit 9-8 **Unimplemented:** Read as ‘0’

bit 7 **BUFS:** Buffer Fill Status bit
Only valid when BUFM = 1.
1 = ADC is currently filling buffer 0x8-0xF, user should access data in 0x0-0x7
0 = ADC is currently filling buffer 0x0-0x7, user should access data in 0x8-0xF

bit 6 **Unimplemented:** Read as ‘0’

bit 5-2 **SMPI<3:0>:** Sample/Convert Sequences Per Interrupt Selection bits
1111 = Interrupts at the completion of conversion for each 16th sample/convert sequence
1110 = Interrupts at the completion of conversion for each 15th sample/convert sequence
•
•
•
0001 = Interrupts at the completion of conversion for each 2nd sample/convert sequence
0000 = Interrupts at the completion of conversion for each sample/convert sequence

bit 1 **BUFM:** ADC Result Buffer Mode Select bit
1 = Buffer configured as two 8-word buffers, ADC1BUF7-ADC1BUF0, ADC1BUFF-ADCBUF8
0 = Buffer configured as one 16-word buffer ADC1BUFF-ADC1BUF0

bit 0 **ALTS:** Alternate Input Sample Mode Select bit
1 = Uses Sample A input multiplexer settings for first sample, and then alternates between Sample B and Sample A input multiplexer settings for all subsequent samples
0 = Always use Sample A input multiplexer settings

REGISTER 22-3: AD1CON3: ADC CONTROL REGISTER 3

Bit Range	Bit 31/23/15/7	Bit 30/22/14/6	Bit 29/21/13/5	Bit 28/20/12/4	Bit 27/19/11/3	Bit 26/18/10/2	Bit 25/17/9/1	Bit 24/16/8/0
31:24	U-0	U-0	U-0	U-0	U-0	U-0	U-0	U-0
	—	—	—	—	—	—	—	—
23:16	U-0	U-0	U-0	U-0	U-0	U-0	U-0	U-0
	—	—	—	—	—	—	—	—
15:8	R/W-0	U-0	U-0	R/W-0	R/W-0	R/W-0	R/W-0	R/W-0
	ADRC	—	—	SAMC<4:0>(1)				
7:0	R/W-0	R/W-0	R/W-0	R/W-0	R/W-0	R/W-0	R/W	R/W-0
	ADCS<7:0>(2)							

Legend:			
R = Readable bit	W = Writable bit	U = Unimplemented bit, read as ‘0’	
-n = Value at POR	‘1’ = Bit is set	‘0’ = Bit is cleared	x = Bit is unknown

bit 31-16 **Unimplemented:** Read as ‘0’

bit 15 **ADRC:** ADC Conversion Clock Source bit
1 = Clock derived from FRC
0 = Clock derived from Peripheral Bus Clock (PBCLK)

bit 14-13 **Unimplemented:** Read as ‘0’

bit 12-8 **SAMC<4:0>:** Auto-Sample Time bits(1)
11111 = 31 TAD
•
•
•
00001 = 1 TAD
00000 = 0 TAD (Not allowed)

bit 7-0 **ADCS<7:0>:** ADC Conversion Clock Select bits(2)
11111111 = TPB • 2 • (ADCS<7:0> + 1) = 512 • TPB = TAD
•
•
•
00000001 = TPB • 2 • (ADCS<7:0> + 1) = 4 • TPB = TAD
00000000 = TPB • 2 • (ADCS<7:0> + 1) = 2 • TPB = TAD

Note 1: This bit is only used if the SSRC<2:0> bits (AD1CON1<7:5>) = 111.
2: This bit is not used if the ADRC bit (AD1CON3<15>) = 1.

© 2009-2013 Microchip Technology Inc.

REGISTER 22-4: AD1CHS: ADC INPUT SELECT REGISTER

Bit Range	Bit 31/23/15/7	Bit 30/22/14/6	Bit 29/21/13/5	Bit 28/20/12/4	Bit 27/19/11/3	Bit 26/18/10/2	Bit 25/17/9/1	Bit 24/16/8/0
31:24	R/W-0	U-0	U-0	U-0	R/W-0	R/W-0	R/W-0	R/W-0
	CH0NB	—	—	—	CH0SB<3:0>			
23:16	R/W-0	U-0	U-0	U-0	R/W-0	R/W-0	R/W-0	R/W-0
	CH0NA	—	—	—	CH0SA<3:0>			
15:8	U-0	U-0	U-0	U-0	U-0	U-0	U-0	U-0
	—	—	—	—	—	—	—	—
7:0	U-0	U-0	U-0	U-0	U-0	U-0	U-0	U-0
	—	—	—	—	—	—	—	—

Legend:			
R = Readable bit	W = Writable bit	U = Unimplemented bit, read as ‘0’	
-n = Value at POR	‘1’ = Bit is set	‘0’ = Bit is cleared	x = Bit is unknown

bit 31 **CH0NB:** Negative Input Select bit for Sample B
`1` = Channel 0 negative input is AN1
`0` = Channel 0 negative input is VREFL

bit 30-28 **Unimplemented:** Read as ‘`0`’

bit 27-24 **CH0SB<3:0>:** Positive Input Select bits for Sample B
`1111` = Channel 0 positive input is AN15
•
•
•
`0001` = Channel 0 positive input is AN1
`0000` = Channel 0 positive input is AN0

bit 23 **CH0NA:** Negative Input Select bit for Sample A Multiplexer Setting
`1` = Channel 0 negative input is AN1
`0` = Channel 0 negative input is VREFL

bit 22-20 **Unimplemented:** Read as ‘`0`’

bit 19-16 **CH0SA<3:0>:** Positive Input Select bits for Sample A Multiplexer Setting
`1111` = Channel 0 positive input is AN15
•
•
•
`0001` = Channel 0 positive input is AN1
`0000` = Channel 0 positive input is AN0

bit 15-0 **Unimplemented:** Read as ‘`0`’

REGISTER 22-5: AD1CSSL: ADC INPUT SCAN SELECT REGISTER

Bit Range	Bit 31/23/15/7	Bit 30/22/14/6	Bit 29/21/13/5	Bit 28/20/12/4	Bit 27/19/11/3	Bit 26/18/10/2	Bit 25/17/9/1	Bit 24/16/8/0
31:24	U-0	U-0	U-0	U-0	U-0	U-0	U-0	U-0
	—	—	—	—	—	—	—	—
23:16	U-0	U-0	U-0	U-0	U-0	U-0	U-0	U-0
	—	—	—	—	—	—	—	—
15:8	R/W-0	R/W-0	R/W-0	R/W-0	R/W-0	R/W-0	R/W-0	R/W-0
	CSSL15	CSSL14	CSSL13	CSSL12	CSSL11	CSSL10	CSSL9	CSSL8
7:0	R/W-0	R/W-0	R/W-0	R/W-0	R/W-0	R/W-0	R/W-0	R/W-0
	CSSL7	CSSL6	CSSL5	CSSL4	CSSL3	CSSL2	CSSL1	CSSL0

Legend:			
R = Readable bit	W = Writable bit	U = Unimplemented bit, read as ‘0’	
-n = Value at POR	‘1’ = Bit is set	‘0’ = Bit is cleared	x = Bit is unknown

bit 31-16 **Unimplemented:** Read as ‘0’

bit 15-0 **CSSL<15:0>:** ADC Input Pin Scan Selection bits(1)

1 = Select ANx for input scan
0 = Skip ANx for input scan

Note 1: CSSL = ANx, where ‘x’ = 0-15.

© 2009-2013 Microchip Technology Inc.

23.0 CONTROLLER AREA NETWORK (CAN)

Note 1: This data sheet summarizes the features of the PIC32MX5XX/6XX/7XX family of devices. It is not intended to be a comprehensive reference source. To complement the information in this data sheet, refer to **Section 34. "Controller Area Network (CAN)"** (DS60001154) in the *"PIC32 Family Reference Manual"*, which is available from the Microchip web site (www.microchip.com/PIC32).

2: Some registers and associated bits described in this section may not be available on all devices. Refer to **Section 4.0 "Memory Organization"** in this data sheet for device-specific register and bit information.

The Controller Area Network (CAN) module supports the following key features:

- Standards Compliance:
  - Full CAN 2.0B compliance
  - Programmable bit rate up to 1 Mbps
- Message Reception and Transmission:
  - 32 message FIFOs
  - Each FIFO can have up to 32 messages for a total of 1024 messages
  - FIFO can be a transmit message FIFO or a receive message FIFO
  - User-defined priority levels for message FIFOs used for transmission
  - 32 acceptance filters for message filtering
  - Four acceptance filter mask registers for message filtering
  - Automatic response to remote transmit request
  - DeviceNet™ addressing support
- Additional Features:
  - Loopback, Listen All Messages, and Listen Only modes for self-test, system diagnostics and bus monitoring
  - Low-power operating modes
  - CAN module is a bus master on the PIC32 system bus
  - Use of DMA is not required
  - Dedicated time-stamp timer
  - Dedicated DMA channels
  - Data-only Message Reception mode

Figure 23-1 illustrates the general structure of the CAN module.

FIGURE 23-1: PIC32 CAN MODULE BLOCK DIAGRAM

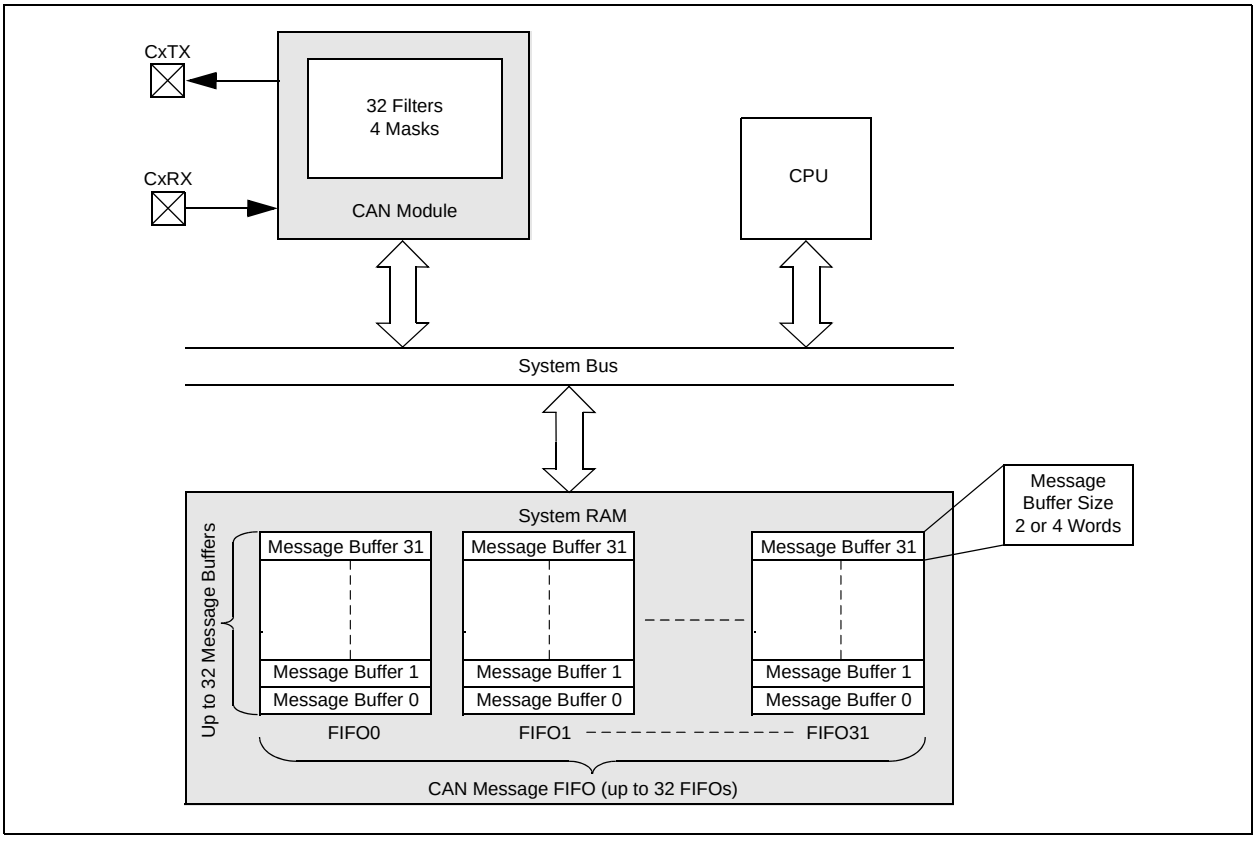

REGISTER 23-1: CiCON: CAN MODULE CONTROL REGISTER

Bit Range	Bit 31/23/15/7	Bit 30/22/14/6	Bit 29/21/13/5	Bit 28/20/12/4	Bit 27/19/11/3	Bit 26/18/10/2	Bit 25/17/9/1	Bit 24/16/8/0
31:24	U-0	U-0	U-0	U-0	S/HC-0	R/W-1	R/W-0	R/W-0
	—	—	—	—	ABAT	REQOP<2:0>		
23:16	R-1	R-0	R-0	R/W-0	U-0	U-0	U-0	U-0
	OPMOD<2:0>			CANCAP	—	—	—	—
15:8	R/W-0	U-0	R/W-0	U-0	R-0	U-0	U-0	U-0
	ON(1)	—	SIDLE	—	CANBUSY	—	—	—
7:0	U-0	U-0	U-0	R/W-0	R/W-0	R/W-0	R/W-0	R/W-0
	—	—	—	DNCNT<4:0>				

Legend:	HC = Hardware Clear	S = Settable bit	
R = Readable bit	W = Writable bit	U = Unimplemented bit, read as ‘0’	
-n = Value at POR	‘1’ = Bit is set	‘0’ = Bit is cleared	x = Bit is unknown

bit 31-28 **Unimplemented:** Read as ‘0’

bit 27 **ABAT:** Abort All Pending Transmissions bit
1 = Signal all transmit buffers to abort transmission
0 = Module will clear this bit when all transmissions aborted

bit 26-24 **REQOP<2:0>:** Request Operation Mode bits
111 = Set Listen All Messages mode
110 = Reserved
101 = Reserved
100 = Set Configuration mode
011 = Set Listen Only mode
010 = Set Loopback mode
001 = Set Disable mode
000 = Set Normal Operation mode

bit 23-21 **OPMOD<2:0>:** Operation Mode Status bits
111 = Module is in Listen All Messages mode
110 = Reserved
101 = Reserved
100 = Module is in Configuration mode
011 = Module is in Listen Only mode
010 = Module is in Loopback mode
001 = Module is in Disable mode
000 = Module is in Normal Operation mode

bit 20 **CANCAP:** CAN Message Receive Time Stamp Timer Capture Enable bit
1 = CANTMR value is stored on valid message reception and is stored with the message
0 = Disable CAN message receive time stamp timer capture and stop CANTMR to conserve power

bit 19-16 **Unimplemented:** Read as ‘0’

bit 15 **ON:** CAN On bit(1)
1 = CAN module is enabled
0 = CAN module is disabled

bit 14 **Unimplemented:** Read as ‘0’

Note 1: If the user application clears this bit, it may take a number of cycles before the CAN module completes the current transaction and responds to this request. The user application should poll the CANBUSY bit to verify that the request has been honored.

© 2009-2013 Microchip Technology Inc.

REGISTER 23-1: CiCON: CAN MODULE CONTROL REGISTER (CONTINUED)

bit 13 **SIDLE:** CAN Stop in Idle bit

1 = CAN Stops operation when system enters Idle mode
0 = CAN continues operation when system enters Idle mode

bit 12 **Unimplemented:** Read as '0'

bit 11 **CANBUSY:** CAN Module is Busy bit

1 = The CAN module is active
0 = The CAN module is completely disabled

bit 10-5 **Unimplemented:** Read as '0'

bit 4-0 **DNCNT<4:0>:** Device Net Filter Bit Number bits

10011-11111 = Invalid Selection (compare up to 18-bits of data with EID)
10010 = Compare up to data byte 2 bit 6 with EID17 (CiRXFn<17>)
•
•
•
00001 = Compare up to data byte 0 bit 7 with EID0 (CiRXFn<0>)
00000 = Do not compare data bytes

Note 1: If the user application clears this bit, it may take a number of cycles before the CAN module completes the current transaction and responds to this request. The user application should poll the CANBUSY bit to verify that the request has been honored.

REGISTER 23-2: CiCFG: CAN BAUD RATE CONFIGURATION REGISTER

Bit Range	Bit 31/23/15/7	Bit 30/22/14/6	Bit 29/21/13/5	Bit 28/20/12/4	Bit 27/19/11/3	Bit 26/18/10/2	Bit 25/17/9/1	Bit 24/16/8/0
31:24	U-0	U-0	U-0	U-0	U-0	U-0	U-0	U-0
	—	—	—	—	—	—	—	—
23:16	U-0	R/W-0	U-0	U-0	U-0	R/W-0	R/W-0	R/W-0
	—	WAKFIL	—	—	—	SEG2PH<2:0>(1,4)		
15:8	R/W-0	R/W-0	R/W-0	R/W-0	R/W-0	R/W-0	R/W-0	R/W-0
	SEG2PHTS(1)	SAM(2)	SEG1PH<2:0>			PRSEG<2:0>		
7:0	R/W-0	R/W-0	R/W-0	R/W-0	R/W-0	R/W-0	R/W-0	R/W-0
	SJW<1:0>(3)		BRP<5:0>					

Legend:	HC = Hardware Clear	S = Settable bit	
R = Readable bit	W = Writable bit	U = Unimplemented bit, read as ‘0’	
-n = Value at POR	‘1’ = Bit is set	‘0’ = Bit is cleared	x = Bit is unknown

bit 31-23 **Unimplemented:** Read as ‘0’

bit 22 **WAKFIL:** CAN Bus Line Filter Enable bit
1 = Use CAN bus line filter for wake-up
0 = CAN bus line filter is not used for wake-up

bit 21-19 **Unimplemented:** Read as ‘0’

bit 18-16 **SEG2PH<2:0>:** Phase Buffer Segment 2 bits(1,4)
111 = Length is 8 x TQ
•
•
•
000 = Length is 1 x TQ

bit 15 **SEG2PHTS:** Phase Segment 2 Time Select bit(1)
1 = Freely programmable
0 = Maximum of SEG1PH or Information Processing Time, whichever is greater

bit 14 **SAM:** Sample of the CAN Bus Line bit(2)
1 = Bus line is sampled three times at the sample point
0 = Bus line is sampled once at the sample point

bit 13-11 **SEG1PH<2:0>:** Phase Buffer Segment 1 bits(4)
111 = Length is 8 x TQ
•
•
•
000 = Length is 1 x TQ

Note 1: SEG2PH ≤ SEG1PH. If SEG2PHTS is clear, SEG2PH will be set automatically.
2: 3 Time bit sampling is not allowed for BRP < 2.
3: SJW ≤ SEG2PH.
4: The Time Quanta per bit must be greater than 7 (that is, TQBIT > 7).

Note: This register can only be modified when the CAN module is in Configuration mode (OPMOD<2:0> (CiCON<23:21>) = 100).

© 2009-2013 Microchip Technology Inc.

REGISTER 23-2: CiCFG: CAN BAUD RATE CONFIGURATION REGISTER (CONTINUED)

bit 10-8 **PRSEG<2:0>:** Propagation Time Segment bits[4]

111 = Length is 8 x TQ

•

•

•

000 = Length is 1 x TQ

bit 7-6 **SJW<1:0>:** Synchronization Jump Width bits[3]

11 = Length is 4 x TQ
10 = Length is 3 x TQ
01 = Length is 2 x TQ
00 = Length is 1 x TQ

bit 5-0 **BRP<5:0>:** Baud Rate Prescaler bits

111111 = TQ = (2 x 64)/FSYS
111110 = TQ = (2 x 63)/FSYS

•

•

•

000001 = TQ = (2 x 2)/FSYS
000000 = TQ = (2 x 1)/FSYS

Note 1: SEG2PH ≤ SEG1PH. If SEG2PHTS is clear, SEG2PH will be set automatically.

2: 3 Time bit sampling is not allowed for BRP < 2.

3: SJW ≤ SEG2PH.

4: The Time Quanta per bit must be greater than 7 (that is, TQBIT > 7).

Note: This register can only be modified when the CAN module is in Configuration mode (OPMOD<2:0> (CiCON<23:21>) = 100).

REGISTER 23-3: CiINT: CAN INTERRUPT REGISTER

Bit Range	Bit 31/23/15/7	Bit 30/22/14/6	Bit 29/21/13/5	Bit 28/20/12/4	Bit 27/19/11/3	Bit 26/18/10/2	Bit 25/17/9/1	Bit 24/16/8/0
31:24	R/W-0	R/W-0	R/W-0	R/W-0	R/W-0	U-0	U-0	U-0
	IVRIE	WAKIE	CERRIE	SERRIE	RBOVIE	—	—	—
23:16	U-0	U-0	U-0	U-0	R/W-0	R/W-0	R/W-0	R/W-0
	—	—	—	—	MODIE	CTMRIE	RBIE	TBIE
15:8	R/W-0	R/W-0	R/W-0	R/W-0	R/W-0	U-0	U-0	U-0
	IVRIF	WAKIF	CERRIF	SERRIF(1)	RBOVIF	—	—	—
7:0	U-0	U-0	U-0	U-0	R/W-0	R/W-0	R/W-0	R/W-0
	—	—	—	—	MODIF	CTMRIF	RBIF	TBIF

Legend:			
R = Readable bit	W = Writable bit	U = Unimplemented bit, read as ‘0’	
-n = Value at POR	‘1’ = Bit is set	‘0’ = Bit is cleared	x = Bit is unknown

bit 31 **IVRIE:** Invalid Message Received Interrupt Enable bit
1 = Interrupt request is enabled
0 = Interrupt request is not enabled

bit 30 **WAKIE:** CAN Bus Activity Wake-up Interrupt Enable bit
1 = Interrupt request is enabled
0 = Interrupt request is not enabled

bit 29 **CERRIE:** CAN Bus Error Interrupt Enable bit
1 = Interrupt request is enabled
0 = Interrupt request is not enabled

bit 28 **SERRIE:** System Error Interrupt Enable bit
1 = Interrupt request is enabled
0 = Interrupt request is not enabled

bit 27 **RBOVIE:** Receive Buffer Overflow Interrupt Enable bit
1 = Interrupt request is enabled
0 = Interrupt request is not enabled

bit 26-20 **Unimplemented:** Read as ‘0’

bit 19 **MODIE:** Mode Change Interrupt Enable bit
1 = Interrupt request is enabled
0 = Interrupt request is not enabled

bit 18 **CTMRIE:** CAN Timestamp Timer Interrupt Enable bit
1 = Interrupt request is enabled
0 = Interrupt request is not enabled

bit 17 **RBIE:** Receive Buffer Interrupt Enable bit
1 = Interrupt request is enabled
0 = Interrupt request is not enabled

bit 16 **TBIE:** Transmit Buffer Interrupt Enable bit
1 = Interrupt request is enabled
0 = Interrupt request is not enabled

bit 15 **IVRIF:** Invalid Message Received Interrupt Flag bit
1 = An invalid messages interrupt has occurred
0 = An invalid message interrupt has not occurred

Note 1: This bit can only be cleared by turning the CAN module Off and On by clearing or setting the ON bit (CiCON<15>).

© 2009-2013 Microchip Technology Inc.

REGISTER 23-3: CiINT: CAN INTERRUPT REGISTER (CONTINUED)

bit 14 **WAKIF:** CAN Bus Activity Wake-up Interrupt Flag bit
1 = A bus wake-up activity interrupt has occurred
0 = A bus wake-up activity interrupt has not occurred

bit 13 **CERRIF:** CAN Bus Error Interrupt Flag bit
1 = A CAN bus error has occurred
0 = A CAN bus error has not occurred

bit 12 **SERRIF:** System Error Interrupt Flag bit
1 = A system error occurred (typically an illegal address was presented to the system bus)
0 = A system error has not occurred

bit 11 **RBOVIF:** Receive Buffer Overflow Interrupt Flag bit
1 = A receive buffer overflow has occurred
0 = A receive buffer overflow has not occurred

bit 10-4 **Unimplemented:** Read as '0'

bit 3 **MODIF:** CAN Mode Change Interrupt Flag bit
1 = A CAN module mode change has occurred (OPMOD<2:0> has changed to reflect REQOP)
0 = A CAN module mode change has not occurred

bit 2 **CTMRIF:** CAN Timer Overflow Interrupt Flag bit
1 = A CAN timer (CANTMR) overflow has occurred
0 = A CAN timer (CANTMR) overflow has not occurred

bit 1 **RBIF:** Receive Buffer Interrupt Flag bit
1 = A receive buffer interrupt is pending
0 = A receive buffer interrupt is not pending

bit 0 **TBIF:** Transmit Buffer Interrupt Flag bit
1 = A transmit buffer interrupt is pending
0 = A transmit buffer interrupt is not pending

Note 1: This bit can only be cleared by turning the CAN module Off and On by clearing or setting the ON bit (CiCON<15>).

REGISTER 23-4: CiVEC: CAN INTERRUPT CODE REGISTER

Bit Range	Bit 31/23/15/7	Bit 30/22/14/6	Bit 29/21/13/5	Bit 28/20/12/4	Bit 27/19/11/3	Bit 26/18/10/2	Bit 25/17/9/1	Bit 24/16/8/0
31:24	U-0	U-0	U-0	U-0	U-0	U-0	U-0	U-0
	—	—	—	—	—	—	—	—
23:16	U-0	U-0	U-0	U-0	U-0	U-0	U-0	U-0
	—	—	—	—	—	—	—	—
15:8	U-0	U-0	U-0	R-0	R-0	R-0	R-0	R-0
	—	—	—	FILHIT<4:0>				
7:0	U-0	R-1	R-0	R-0	R-0	R-0	R-0	R-0
	—	ICODE<6:0>(1)						

Legend:			
R = Readable bit	W = Writable bit	U = Unimplemented bit, read as ‘0’	
-n = Value at POR	‘1’ = Bit is set	‘0’ = Bit is cleared	x = Bit is unknown

bit 31-13 **Unimplemented:** Read as ‘0’

bit 12-8 **FILHIT<4:0>:** Filter Hit Number bit

11111 = Filter 31
11110 = Filter 30
.
.
.
00001 = Filter 1
00000 = Filter 0

bit 7 **Unimplemented:** Read as ‘0’

bit 6-0 **ICODE<6:0>:** Interrupt Flag Code bits(1)

1111111 = Reserved
.
.
.
1001001 = Reserved
1001000 = Invalid message received (IVRIF)
1000111 = CAN module mode change (MODIF)
1000110 = CAN timestamp timer (CTMRIF)
1000101 = Bus bandwidth error (SERRIF)
1000100 = Address error interrupt (SERRIF)
1000011 = Receive FIFO overflow interrupt (RBOVIF)
1000010 = Wake-up interrupt (WAKIF)
1000001 = Error Interrupt (CERRIF)
1000000 = No interrupt
0111111 = Reserved
.
.
.
0100000 = Reserved
0011111 = FIFO31 Interrupt (CiFSTAT<31> set)
0011110 = FIFO30 Interrupt (CiFSTAT<30> set)
.
.
.
0000001 = FIFO1 Interrupt (CiFSTAT<1> set)
0000000 = FIFO0 Interrupt (CiFSTAT<0> set)

Note 1: These bits are only updated for enabled interrupts.

© 2009-2013 Microchip Technology Inc.

REGISTER 23-5: CiTREC: CAN TRANSMIT/RECEIVE ERROR COUNT REGISTER

Bit Range	Bit 31/23/15/7	Bit 30/22/14/6	Bit 29/21/13/5	Bit 28/20/12/4	Bit 27/19/11/3	Bit 26/18/10/2	Bit 25/17/9/1	Bit 24/16/8/0
31:24	U-0	U-0	U-0	U-0	U-0	U-0	U-0	U-0
	—	—	—	—	—	—	—	—
23:16	U-0	U-0	R-0	R-0	R-0	R-0	R-0	R-0
	—	—	TXBO	TXBP	RXBP	TXWARN	RXWARN	EWARN
15:8	R-0	R-0	R-0	R-0	R-0	R-0	R-0	R-0
	TERRCNT<7:0>							
7:0	R-0	R-0	R-0	R-0	R-0	R-0	R-0	R-0
	RERRCNT<7:0>							

Legend:			
R = Readable bit	W = Writable bit	U = Unimplemented bit, read as ‘0’	
-n = Value at POR	‘1’ = Bit is set	‘0’ = Bit is cleared	x = Bit is unknown

bit 31-22 **Unimplemented:** Read as ‘0’
bit 21 **TXBO:** Transmitter in Error State Bus OFF (TERRCNT ≥ 256)
bit 20 **TXBP:** Transmitter in Error State Bus Passive (TERRCNT ≥ 128)
bit 19 **RXBP:** Receiver in Error State Bus Passive (RERRCNT ≥ 128)
bit 18 **TXWARN:** Transmitter in Error State Warning (128 > TERRCNT ≥ 96)
bit 17 **RXWARN:** Receiver in Error State Warning (128 > RERRCNT ≥ 96)
bit 16 **EWARN:** Transmitter or Receiver is in Error State Warning
bit 15-8 **TERRCNT<7:0>:** Transmit Error Counter
bit 7-0 **RERRCNT<7:0>:** Receive Error Counter

REGISTER 23-6: CiFSTAT: CAN FIFO STATUS REGISTER

Bit Range	Bit 31/23/15/7	Bit 30/22/14/6	Bit 29/21/13/5	Bit 28/20/12/4	Bit 27/19/11/3	Bit 26/18/10/2	Bit 25/17/9/1	Bit 24/16/8/0
31:24	R-0	R-0	R-0	R-0	R-0	R-0	R-0	R-0
	FIFOIP31	FIFOIP30	FIFOIP29	FIFOIP28	FIFOIP27	FIFOIP26	FIFOIP25	FIFOIP24
23:16	R-0	R-0	R-0	R-0	R-0	R-0	R-0	R-0
	FIFOIP23	FIFOIP22	FIFOIP21	FIFOIP20	FIFOIP19	FIFOIP18	FIFOIP17	FIFOIP16
15:8	R-0	R-0	R-0	R-0	R-0	R-0	R-0	R-0
	FIFOIP15	FIFOIP14	FIFOIP13	FIFOIP12	FIFOIP11	FIFOIP10	FIFOIP9	FIFOIP8
7:0	R-0	R-0	R-0	R-0	R-0	R-0	R-0	R-0
	FIFOIP7	FIFOIP6	FIFOIP5	FIFOIP4	FIFOIP3	FIFOIP2	FIFOIP1	FIFOIP0

Legend:			
R = Readable bit	W = Writable bit	U = Unimplemented bit, read as ‘0’	
-n = Value at POR	‘1’ = Bit is set	‘0’ = Bit is cleared	x = Bit is unknown

bit 31-0 **FIFOIP<31:0>:** FIFOn Interrupt Pending bits
1 = One or more enabled FIFO interrupts are pending
0 = No FIFO interrupts are pending

REGISTER 23-7: CiRXOVF: CAN RECEIVE FIFO OVERFLOW STATUS REGISTER

Bit Range	Bit 31/23/15/7	Bit 30/22/14/6	Bit 29/21/13/5	Bit 28/20/12/4	Bit 27/19/11/3	Bit 26/18/10/2	Bit 25/17/9/1	Bit 24/16/8/0
31:24	R-0	R-0	R-0	R-0	R-0	R-0	R-0	R-0
	RXOVF31	RXOVF30	RXOVF29	RXOVF28	RXOVF27	RXOVF26	RXOVF25	RXOVF24
23:16	R-0	R-0	R-0	R-0	R-0	R-0	R-0	R-0
	RXOVF23	RXOVF22	RXOVF21	RXOVF20	RXOVF19	RXOVF18	RXOVF17	RXOVF16
15:8	R-0	R-0	R-0	R-0	R-0	R-0	R-0	R-0
	RXOVF15	RXOVF14	RXOVF13	RXOVF12	RXOVF11	RXOVF10	RXOVF9	RXOVF8
7:0	R-0	R-0	R-0	R-0	R-0	R-0	R-0	R-0
	RXOVF7	RXOVF6	RXOVF5	RXOVF4	RXOVF3	RXOVF2	RXOVF1	RXOVF0

Legend:			
R = Readable bit	W = Writable bit	U = Unimplemented bit, read as ‘0’	
-n = Value at POR	‘1’ = Bit is set	‘0’ = Bit is cleared	x = Bit is unknown

bit 31-0 **RXOVF<31:0>:** FIFOn Receive Overflow Interrupt Pending bit
`1` = FIFO has overflowed
`0` = FIFO has not overflowed

REGISTER 23-8: CiTMR: CAN TIMER REGISTER

Bit Range	Bit 31/23/15/7	Bit 30/22/14/6	Bit 29/21/13/5	Bit 28/20/12/4	Bit 27/19/11/3	Bit 26/18/10/2	Bit 25/17/9/1	Bit 24/16/8/0
31:24	R/W-0	R/W-0	R/W-0	R/W-0	R/W-0	R/W-0	R/W-0	R/W-0
	CANTS<15:8>							
23:16	R/W-0	R/W-0	R/W-0	R/W-0	R/W-0	R/W-0	R/W-0	R/W-0
	CANTS<7:0>							
15:8	R/W-0	R/W-0	R/W-0	R/W-0	R/W-0	R/W-0	R/W-0	R/W-0
	CANTSPRE<15:8>							
7:0	R/W-0	R/W-0	R/W-0	R/W-0	R/W-0	R/W-0	R/W-0	R/W-0
	CANTSPRE<7:0>							

Legend:			
R = Readable bit	W = Writable bit	U = Unimplemented bit, read as ‘0’	
-n = Value at POR	‘1’ = Bit is set	‘0’ = Bit is cleared	x = Bit is unknown

bit 31-0 **CANTS<15:0>:** CAN Time Stamp Timer bits
This is a free-running timer that increments every CANTSPRE system clocks when the CANCAP bit (CiCON<20>) is set.

bit 15-0 **CANTSPRE<15:0>:** CAN Time Stamp Timer Prescaler bits
`1111 1111 1111 1111` = CAN time stamp timer (CANTS) increments every 65,535 system clocks
•
•
•
`0000 0000 0000 0000` = CAN time stamp timer (CANTS) increments every system clock

Note 1: CiTMR will be paused when CANCAP = `0`.
2: The CiTMR prescaler count will be reset on any write to CiTMR (CANTSPRE will be unaffected).

© 2009-2013 Microchip Technology Inc.

REGISTER 23-9: CiRXMn: CAN ACCEPTANCE FILTER MASK 'n' REGISTER (n = 0, 1, 2 OR 3)

Bit Range	Bit 31/23/15/7	Bit 30/22/14/6	Bit 29/21/13/5	Bit 28/20/12/4	Bit 27/19/11/3	Bit 26/18/10/2	Bit 25/17/9/1	Bit 24/16/8/0
31:24	R/W-0	R/W-0	R/W-0	R/W-0	R/W-0	R/W-0	R/W-0	R/W-0
	SID<10:3>							
23:16	R/W-0	R/W-0	R/W-0	U-0	R/W-0	U-0	R/W-0	R/W-0
	SID<2:0>			—	MIDE	—	EID<17:16>	
15:8	R/W-0	R/W-0	R/W-0	R/W-0	R/W-0	R/W-0	R/W-0	R/W-0
	EID<15:8>							
7:0	R/W-0	R/W-0	R/W-0	R/W-0	R/W-0	R/W-0	R/W-0	R/W-0
	EID<7:0>							

Legend:			
R = Readable bit	W = Writable bit	U = Unimplemented bit, read as '0'	
-n = Value at POR	'1' = Bit is set	'0' = Bit is cleared	x = Bit is unknown

bit 31-21 **SID<10:0>:** Standard Identifier bits
`1` = Include the SIDx bit in filter comparison
`0` = The SIDx bit is a 'don't care' in filter operation

bit 20 **Unimplemented:** Read as '`0`'

bit 19 **MIDE:** Identifier Receive Mode bit
`1` = Match only message types (standard/extended address) that correspond to the EXID bit in filter
`0` = Match either standard or extended address message if filters match (that is, if (Filter SID) = (Message SID) or if (FILTER SID/EID) = (Message SID/EID))

bit 18 **Unimplemented:** Read as '`0`'

bit 17-0 **EID<17:0>:** Extended Identifier bits
`1` = Include the EIDx bit in filter comparison
`0` = The EIDx bit is a 'don't care' in filter operation

Note: This register can only be modified when the CAN module is in Configuration mode (OPMOD<2:0> (CiCON<23:21>) = `100`).

REGISTER 23-10: CiFLTCON0: CAN FILTER CONTROL REGISTER 0

Bit Range	Bit 31/23/15/7	Bit 30/22/14/6	Bit 29/21/13/5	Bit 28/20/12/4	Bit 27/19/11/3	Bit 26/18/10/2	Bit 25/17/9/1	Bit 24/16/8/0
31:24	R/W-0	R/W-0	R/W-0	R/W-0	R/W-0	R/W-0	R/W-0	R/W-0
	FLTEN3	MSEL3<1:0>		FSEL3<4:0>				
23:16	R/W-0	R/W-0	R/W-0	R/W-0	R/W-0	R/W-0	R/W-0	R/W-0
	FLTEN2	MSEL2<1:0>		FSEL2<4:0>				
15:8	R/W-0	R/W-0	R/W-0	R/W-0	R/W-0	R/W-0	R/W-0	R/W-0
	FLTEN1	MSEL1<1:0>		FSEL1<4:0>				
7:0	R/W-0	R/W-0	R/W-0	R/W-0	R/W-0	R/W-0	R/W-0	R/W-0
	FLTEN0	MSEL0<1:0>		FSEL0<4:0>				

Legend:			
R = Readable bit	W = Writable bit	U = Unimplemented bit, read as ‘0’	
-n = Value at POR	‘1’ = Bit is set	‘0’ = Bit is cleared	x = Bit is unknown

bit 31 **FLTEN3:** Filter 3 Enable bit
`1` = Filter is enabled
`0` = Filter is disabled

bit 30-29 **MSEL3<1:0>:** Filter 3 Mask Select bits
`11` = Acceptance Mask 3 selected
`10` = Acceptance Mask 2 selected
`01` = Acceptance Mask 1 selected
`00` = Acceptance Mask 0 selected

bit 28-24 **FSEL3<4:0>:** FIFO Selection bits
`11111` = Message matching filter is stored in FIFO buffer 31
`11110` = Message matching filter is stored in FIFO buffer 30
•
•
•
`00001` = Message matching filter is stored in FIFO buffer 1
`00000` = Message matching filter is stored in FIFO buffer 0

bit 23 **FLTEN2:** Filter 2 Enable bit
`1` = Filter is enabled
`0` = Filter is disabled

bit 22-21 **MSEL2<1:0>:** Filter 2 Mask Select bits
`11` = Acceptance Mask 3 selected
`10` = Acceptance Mask 2 selected
`01` = Acceptance Mask 1 selected
`00` = Acceptance Mask 0 selected

bit 20-16 **FSEL2<4:0>:** FIFO Selection bits
`11111` = Message matching filter is stored in FIFO buffer 31
`11110` = Message matching filter is stored in FIFO buffer 30
•
•
•
`00001` = Message matching filter is stored in FIFO buffer 1
`00000` = Message matching filter is stored in FIFO buffer 0

Note: The bits in this register can only be modified if the corresponding filter enable (FLTENn) bit is ‘`0`’.

© 2009-2013 Microchip Technology Inc.

REGISTER 23-10: CiFLTCON0: CAN FILTER CONTROL REGISTER 0 (CONTINUED)

bit 15 **FLTEN1:** Filter 1 Enable bit

1 = Filter is enabled
0 = Filter is disabled

bit 14-13 **MSEL1<1:0>:** Filter 1 Mask Select bits

11 = Acceptance Mask 3 selected
10 = Acceptance Mask 2 selected
01 = Acceptance Mask 1 selected
00 = Acceptance Mask 0 selected

bit 12-8 **FSEL1<4:0>:** FIFO Selection bits

11111 = Message matching filter is stored in FIFO buffer 31
11110 = Message matching filter is stored in FIFO buffer 30
•
•
•
00001 = Message matching filter is stored in FIFO buffer 1
00000 = Message matching filter is stored in FIFO buffer 0

bit 7 **FLTEN0:** Filter 0 Enable bit

1 = Filter is enabled
0 = Filter is disabled

bit 6-5 **MSEL0<1:0>:** Filter 0 Mask Select bits

11 = Acceptance Mask 3 selected
10 = Acceptance Mask 2 selected
01 = Acceptance Mask 1 selected
00 = Acceptance Mask 0 selected

bit 4-0 **FSEL0<4:0>:** FIFO Selection bits

11111 = Message matching filter is stored in FIFO buffer 31
11110 = Message matching filter is stored in FIFO buffer 30
•
•
•
00001 = Message matching filter is stored in FIFO buffer 1
00000 = Message matching filter is stored in FIFO buffer 0

Note: The bits in this register can only be modified if the corresponding filter enable (FLTENn) bit is '0'.

REGISTER 23-11: CiFLTCON1: CAN FILTER CONTROL REGISTER 1

Bit Range	Bit 31/23/15/7	Bit 30/22/14/6	Bit 29/21/13/5	Bit 28/20/12/4	Bit 27/19/11/3	Bit 26/18/10/2	Bit 25/17/9/1	Bit 24/16/8/0
31:24	R/W-0	R/W-0	R/W-0	R/W-0	R/W-0	R/W-0	R/W-0	R/W-0
	FLTEN7	MSEL7<1:0>		FSEL7<4:0>				
23:16	R/W-0	R/W-0	R/W-0	R/W-0	R/W-0	R/W-0	R/W-0	R/W-0
	FLTEN6	MSEL6<1:0>		FSEL6<4:0>				
15:8	R/W-0	R/W-0	R/W-0	R/W-0	R/W-0	R/W-0	R/W-0	R/W-0
	FLTEN5	MSEL5<1:0>		FSEL5<4:0>				
7:0	R/W-0	R/W-0	R/W-0	R/W-0	R/W-0	R/W-0	R/W-0	R/W-0
	FLTEN4	MSEL4<1:0>		FSEL4<4:0>				

Legend:			
R = Readable bit	W = Writable bit	U = Unimplemented bit, read as ‘0’	
-n = Value at POR	‘1’ = Bit is set	‘0’ = Bit is cleared	x = Bit is unknown

bit 31 **FLTEN7:** Filter 7 Enable bit
`1` = Filter is enabled
`0` = Filter is disabled

bit 30-29 **MSEL7<1:0>:** Filter 7 Mask Select bits
`11` = Acceptance Mask 3 selected
`10` = Acceptance Mask 2 selected
`01` = Acceptance Mask 1 selected
`00` = Acceptance Mask 0 selected

bit 28-24 **FSEL7<4:0>:** FIFO Selection bits
`11111` = Message matching filter is stored in FIFO buffer 31
`11110` = Message matching filter is stored in FIFO buffer 30
.
.
.
`00001` = Message matching filter is stored in FIFO buffer 1
`00000` = Message matching filter is stored in FIFO buffer 0

bit 23 **FLTEN6:** Filter 6 Enable bit
`1` = Filter is enabled
`0` = Filter is disabled

bit 22-21 **MSEL6<1:0>:** Filter 6 Mask Select bits
`11` = Acceptance Mask 3 selected
`10` = Acceptance Mask 2 selected
`01` = Acceptance Mask 1 selected
`00` = Acceptance Mask 0 selected

bit 20-16 **FSEL6<4:0>:** FIFO Selection bits
`11111` = Message matching filter is stored in FIFO buffer 31
`11110` = Message matching filter is stored in FIFO buffer 30
.
.
.
`00001` = Message matching filter is stored in FIFO buffer 1
`00000` = Message matching filter is stored in FIFO buffer 0

Note: The bits in this register can only be modified if the corresponding filter enable (FLTENn) bit is ‘`0`’.

© 2009-2013 Microchip Technology Inc.

REGISTER 23-11: CiFLTCON1: CAN FILTER CONTROL REGISTER 1 (CONTINUED)

bit 15 **FLTEN5:** Filter 17 Enable bit

1 = Filter is enabled
0 = Filter is disabled

bit 14-13 **MSEL5<1:0>:** Filter 5 Mask Select bits

11 = Acceptance Mask 3 selected
10 = Acceptance Mask 2 selected
01 = Acceptance Mask 1 selected
00 = Acceptance Mask 0 selected

bit 12-8 **FSEL5<4:0>:** FIFO Selection bits

11111 = Message matching filter is stored in FIFO buffer 31
11110 = Message matching filter is stored in FIFO buffer 30
•
•
•
00001 = Message matching filter is stored in FIFO buffer 1
00000 = Message matching filter is stored in FIFO buffer 0

bit 7 **FLTEN4:** Filter 4 Enable bit

1 = Filter is enabled
0 = Filter is disabled

bit 6-5 **MSEL4<1:0>:** Filter 4 Mask Select bits

11 = Acceptance Mask 3 selected
10 = Acceptance Mask 2 selected
01 = Acceptance Mask 1 selected
00 = Acceptance Mask 0 selected

bit 4-0 **FSEL4<4:0>:** FIFO Selection bits

11111 = Message matching filter is stored in FIFO buffer 31
11110 = Message matching filter is stored in FIFO buffer 30
•
•
•
00001 = Message matching filter is stored in FIFO buffer 1
00000 = Message matching filter is stored in FIFO buffer 0

Note: The bits in this register can only be modified if the corresponding filter enable (FLTENn) bit is '0'.

REGISTER 23-12: CiFLTCON2: CAN FILTER CONTROL REGISTER 2

Bit Range	Bit 31/23/15/7	Bit 30/22/14/6	Bit 29/21/13/5	Bit 28/20/12/4	Bit 27/19/11/3	Bit 26/18/10/2	Bit 25/17/9/1	Bit 24/16/8/0
31:24	R/W-0	R/W-0	R/W-0	R/W-0	R/W-0	R/W-0	R/W-0	R/W-0
	FLTEN11	MSEL11<1:0>		FSEL11<4:0>				
23:16	R/W-0	R/W-0	R/W-0	R/W-0	R/W-0	R/W-0	R/W-0	R/W-0
	FLTEN10	MSEL10<1:0>		FSEL10<4:0>				
15:8	R/W-0	R/W-0	R/W-0	R/W-0	R/W-0	R/W-0	R/W-0	R/W-0
	FLTEN9	MSEL9<1:0>		FSEL9<4:0>				
7:0	R/W-0	R/W-0	R/W-0	R/W-0	R/W-0	R/W-0	R/W-0	R/W-0
	FLTEN8	MSEL8<1:0>		FSEL8<4:0>				

Legend:			
R = Readable bit	W = Writable bit	U = Unimplemented bit, read as ‘0’	
-n = Value at POR	‘1’ = Bit is set	‘0’ = Bit is cleared	x = Bit is unknown

bit 31 **FLTEN11:** Filter 11 Enable bit
`1` = Filter is enabled
`0` = Filter is disabled

bit 30-29 **MSEL11<1:0>:** Filter 11 Mask Select bits
`11` = Acceptance Mask 3 selected
`10` = Acceptance Mask 2 selected
`01` = Acceptance Mask 1 selected
`00` = Acceptance Mask 0 selected

bit 28-24 **FSEL11<4:0>:** FIFO Selection bits
`11111` = Message matching filter is stored in FIFO buffer 31
`11110` = Message matching filter is stored in FIFO buffer 30
•
•
•
`00001` = Message matching filter is stored in FIFO buffer 1
`00000` = Message matching filter is stored in FIFO buffer 0

bit 23 **FLTEN10:** Filter 10 Enable bit
`1` = Filter is enabled
`0` = Filter is disabled

bit 22-21 **MSEL10<1:0>:** Filter 10 Mask Select bits
`11` = Acceptance Mask 3 selected
`10` = Acceptance Mask 2 selected
`01` = Acceptance Mask 1 selected
`00` = Acceptance Mask 0 selected

bit 20-16 **FSEL10<4:0>:** FIFO Selection bits
`11111` = Message matching filter is stored in FIFO buffer 31
`11110` = Message matching filter is stored in FIFO buffer 30
•
•
•
`00001` = Message matching filter is stored in FIFO buffer 1
`00000` = Message matching filter is stored in FIFO buffer 0

Note: The bits in this register can only be modified if the corresponding filter enable (FLTENn) bit is ‘`0`’.

© 2009-2013 Microchip Technology Inc.

REGISTER 23-12: CiFLTCON2: CAN FILTER CONTROL REGISTER 2 (CONTINUED)

bit 15 **FLTEN9:** Filter 9 Enable bit

1 = Filter is enabled
0 = Filter is disabled

bit 14-13 **MSEL9<1:0>:** Filter 9 Mask Select bits

11 = Acceptance Mask 3 selected
10 = Acceptance Mask 2 selected
01 = Acceptance Mask 1 selected
00 = Acceptance Mask 0 selected

bit 12-8 **FSEL9<4:0>:** FIFO Selection bits

11111 = Message matching filter is stored in FIFO buffer 31
11110 = Message matching filter is stored in FIFO buffer 30
•
•
•
00001 = Message matching filter is stored in FIFO buffer 1
00000 = Message matching filter is stored in FIFO buffer 0

bit 7 **FLTEN8:** Filter 8 Enable bit

1 = Filter is enabled
0 = Filter is disabled

bit 6-5 **MSEL8<1:0>:** Filter 8 Mask Select bits

11 = Acceptance Mask 3 selected
10 = Acceptance Mask 2 selected
01 = Acceptance Mask 1 selected
00 = Acceptance Mask 0 selected

bit 4-0 **FSEL8<4:0>:** FIFO Selection bits

11111 = Message matching filter is stored in FIFO buffer 31
11110 = Message matching filter is stored in FIFO buffer 30
•
•
•
00001 = Message matching filter is stored in FIFO buffer 1
00000 = Message matching filter is stored in FIFO buffer 0

Note: The bits in this register can only be modified if the corresponding filter enable (FLTENn) bit is '0'.

REGISTER 23-13: CiFLTCON3: CAN FILTER CONTROL REGISTER 3

Bit Range	Bit 31/23/15/7	Bit 30/22/14/6	Bit 29/21/13/5	Bit 28/20/12/4	Bit 27/19/11/3	Bit 26/18/10/2	Bit 25/17/9/1	Bit 24/16/8/0
31:24	R/W-0	R/W-0	R/W-0	R/W-0	R/W-0	R/W-0	R/W-0	R/W-0
	FLTEN15	MSEL15<1:0>		FSEL15<4:0>				
23:16	R/W-0	R/W-0	R/W-0	R/W-0	R/W-0	R/W-0	R/W-0	R/W-0
	FLTEN14	MSEL14<1:0>		FSEL14<4:0>				
15:8	R/W-0	R/W-0	R/W-0	R/W-0	R/W-0	R/W-0	R/W-0	R/W-0
	FLTEN13	MSEL13<1:0>		FSEL13<4:0>				
7:0	R/W-0	R/W-0	R/W-0	R/W-0	R/W-0	R/W-0	R/W-0	R/W-0
	FLTEN12	MSEL12<1:0>		FSEL12<4:0>				

Legend:			
R = Readable bit	W = Writable bit	U = Unimplemented bit, read as ‘0’	
-n = Value at POR	‘1’ = Bit is set	‘0’ = Bit is cleared	x = Bit is unknown

bit 31 **FLTEN15:** Filter 15 Enable bit
`1` = Filter is enabled
`0` = Filter is disabled

bit 30-29 **MSEL15<1:0>:** Filter 15 Mask Select bits
`11` = Acceptance Mask 3 selected
`10` = Acceptance Mask 2 selected
`01` = Acceptance Mask 1 selected
`00` = Acceptance Mask 0 selected

bit 28-24 **FSEL15<4:0>:** FIFO Selection bits
`11111` = Message matching filter is stored in FIFO buffer 31
`11110` = Message matching filter is stored in FIFO buffer 30
•
•
•
`00001` = Message matching filter is stored in FIFO buffer 1
`00000` = Message matching filter is stored in FIFO buffer 0

bit 23 **FLTEN14:** Filter 14 Enable bit
`1` = Filter is enabled
`0` = Filter is disabled

bit 22-21 **MSEL14<1:0>:** Filter 14 Mask Select bits
`11` = Acceptance Mask 3 selected
`10` = Acceptance Mask 2 selected
`01` = Acceptance Mask 1 selected
`00` = Acceptance Mask 0 selected

bit 20-16 **FSEL14<4:0>:** FIFO Selection bits
`11111` = Message matching filter is stored in FIFO buffer 31
`11110` = Message matching filter is stored in FIFO buffer 30
•
•
•
`00001` = Message matching filter is stored in FIFO buffer 1
`00000` = Message matching filter is stored in FIFO buffer 0

Note: The bits in this register can only be modified if the corresponding filter enable (FLTENn) bit is ‘`0`’.

© 2009-2013 Microchip Technology Inc.

REGISTER 23-13: CiFLTCON3: CAN FILTER CONTROL REGISTER 3 (CONTINUED)

bit 15 **FLTEN13:** Filter 13 Enable bit

1 = Filter is enabled
0 = Filter is disabled

bit 14-13 **MSEL13<1:0>:** Filter 13 Mask Select bits

11 = Acceptance Mask 3 selected
10 = Acceptance Mask 2 selected
01 = Acceptance Mask 1 selected
00 = Acceptance Mask 0 selected

bit 12-8 **FSEL13<4:0>:** FIFO Selection bits

11111 = Message matching filter is stored in FIFO buffer 31
11110 = Message matching filter is stored in FIFO buffer 30
•
•
•
00001 = Message matching filter is stored in FIFO buffer 1
00000 = Message matching filter is stored in FIFO buffer 0

bit 7 **FLTEN12:** Filter 12 Enable bit

1 = Filter is enabled
0 = Filter is disabled

bit 6-5 **MSEL12<1:0>:** Filter 12 Mask Select bits

11 = Acceptance Mask 3 selected
10 = Acceptance Mask 2 selected
01 = Acceptance Mask 1 selected
00 = Acceptance Mask 0 selected

bit 4-0 **FSEL12<4:0>:** FIFO Selection bits

11111 = Message matching filter is stored in FIFO buffer 31
11110 = Message matching filter is stored in FIFO buffer 30
•
•
•
00001 = Message matching filter is stored in FIFO buffer 1
00000 = Message matching filter is stored in FIFO buffer 0

Note: The bits in this register can only be modified if the corresponding filter enable (FLTENn) bit is '0'.

REGISTER 23-14: CiFLTCON4: CAN FILTER CONTROL REGISTER 4

Bit Range	Bit 31/23/15/7	Bit 30/22/14/6	Bit 29/21/13/5	Bit 28/20/12/4	Bit 27/19/11/3	Bit 26/18/10/2	Bit 25/17/9/1	Bit 24/16/8/0
31:24	R/W-0	R/W-0	R/W-0	R/W-0	R/W-0	R/W-0	R/W-0	R/W-0
	FLTEN19	MSEL19<1:0>		FSEL19<4:0>				
23:16	R/W-0	R/W-0	R/W-0	R/W-0	R/W-0	R/W-0	R/W-0	R/W-0
	FLTEN18	MSEL18<1:0>		FSEL18<4:0>				
15:8	R/W-0	R/W-0	R/W-0	R/W-0	R/W-0	R/W-0	R/W-0	R/W-0
	FLTEN17	MSEL17<1:0>		FSEL17<4:0>				
7:0	R/W-0	R/W-0	R/W-0	R/W-0	R/W-0	R/W-0	R/W-0	R/W-0
	FLTEN16	MSEL16<1:0>		FSEL16<4:0>				

Legend:			
R = Readable bit	W = Writable bit	U = Unimplemented bit, read as ‘0’	
-n = Value at POR	‘1’ = Bit is set	‘0’ = Bit is cleared	x = Bit is unknown

bit 31 **FLTEN19:** Filter 19 Enable bit
`1` = Filter is enabled
`0` = Filter is disabled

bit 30-29 **MSEL19<1:0>:** Filter 19 Mask Select bits
`11` = Acceptance Mask 3 selected
`10` = Acceptance Mask 2 selected
`01` = Acceptance Mask 1 selected
`00` = Acceptance Mask 0 selected

bit 28-24 **FSEL19<4:0>:** FIFO Selection bits
`11111` = Message matching filter is stored in FIFO buffer 31
`11110` = Message matching filter is stored in FIFO buffer 30
•
•
•
`00001` = Message matching filter is stored in FIFO buffer 1
`00000` = Message matching filter is stored in FIFO buffer 0

bit 23 **FLTEN18:** Filter 18 Enable bit
`1` = Filter is enabled
`0` = Filter is disabled

bit 22-21 **MSEL18<1:0>:** Filter 18 Mask Select bits
`11` = Acceptance Mask 3 selected
`10` = Acceptance Mask 2 selected
`01` = Acceptance Mask 1 selected
`00` = Acceptance Mask 0 selected

bit 20-16 **FSEL18<4:0>:** FIFO Selection bits
`11111` = Message matching filter is stored in FIFO buffer 31
`11110` = Message matching filter is stored in FIFO buffer 30
•
•
•
`00001` = Message matching filter is stored in FIFO buffer 1
`00000` = Message matching filter is stored in FIFO buffer 0

Note: The bits in this register can only be modified if the corresponding filter enable (FLTENn) bit is ‘`0`’.

© 2009-2013 Microchip Technology Inc.

REGISTER 23-14: CiFLTCON4: CAN FILTER CONTROL REGISTER 4 (CONTINUED)

bit 15 **FLTEN17:** Filter 13 Enable bit

1 = Filter is enabled
0 = Filter is disabled

bit 14-13 **MSEL17<1:0>:** Filter 17 Mask Select bits

11 = Acceptance Mask 3 selected
10 = Acceptance Mask 2 selected
01 = Acceptance Mask 1 selected
00 = Acceptance Mask 0 selected

bit 12-8 **FSEL17<4:0>:** FIFO Selection bits

11111 = Message matching filter is stored in FIFO buffer 31
11110 = Message matching filter is stored in FIFO buffer 30
•
•
•
00001 = Message matching filter is stored in FIFO buffer 1
00000 = Message matching filter is stored in FIFO buffer 0

bit 7 **FLTEN16:** Filter 16 Enable bit

1 = Filter is enabled
0 = Filter is disabled

bit 6-5 **MSEL16<1:0>:** Filter 16 Mask Select bits

11 = Acceptance Mask 3 selected
10 = Acceptance Mask 2 selected
01 = Acceptance Mask 1 selected
00 = Acceptance Mask 0 selected

bit 4-0 **FSEL16<4:0>:** FIFO Selection bits

11111 = Message matching filter is stored in FIFO buffer 31
11110 = Message matching filter is stored in FIFO buffer 30
•
•
•
00001 = Message matching filter is stored in FIFO buffer 1
00000 = Message matching filter is stored in FIFO buffer 0

Note: The bits in this register can only be modified if the corresponding filter enable (FLTENn) bit is '0'.

REGISTER 23-15: CiFLTCON5: CAN FILTER CONTROL REGISTER 5

Bit Range	Bit 31/23/15/7	Bit 30/22/14/6	Bit 29/21/13/5	Bit 28/20/12/4	Bit 27/19/11/3	Bit 26/18/10/2	Bit 25/17/9/1	Bit 24/16/8/0
31:24	R/W-0	R/W-0	R/W-0	R/W-0	R/W-0	R/W-0	R/W-0	R/W-0
	FLTEN23	MSEL23<1:0>		FSEL23<4:0>				
23:16	R/W-0	R/W-0	R/W-0	R/W-0	R/W-0	R/W-0	R/W-0	R/W-0
	FLTEN22	MSEL22<1:0>		FSEL22<4:0>				
15:8	R/W-0	R/W-0	R/W-0	R/W-0	R/W-0	R/W-0	R/W-0	R/W-0
	FLTEN21	MSEL21<1:0>		FSEL21<4:0>				
7:0	R/W-0	R/W-0	R/W-0	R/W-0	R/W-0	R/W-0	R/W-0	R/W-0
	FLTEN20	MSEL20<1:0>		FSEL20<4:0>				

Legend:			
R = Readable bit	W = Writable bit	U = Unimplemented bit, read as ‘0’	
-n = Value at POR	‘1’ = Bit is set	‘0’ = Bit is cleared	x = Bit is unknown

bit 31 **FLTEN23:** Filter 23 Enable bit
`1` = Filter is enabled
`0` = Filter is disabled

bit 30-29 **MSEL23<1:0>:** Filter 23 Mask Select bits
`11` = Acceptance Mask 3 selected
`10` = Acceptance Mask 2 selected
`01` = Acceptance Mask 1 selected
`00` = Acceptance Mask 0 selected

bit 28-24 **FSEL23<4:0>:** FIFO Selection bits
`11111` = Message matching filter is stored in FIFO buffer 31
`11110` = Message matching filter is stored in FIFO buffer 30
•
•
•
`00001` = Message matching filter is stored in FIFO buffer 1
`00000` = Message matching filter is stored in FIFO buffer 0

bit 23 **FLTEN22:** Filter 22 Enable bit
`1` = Filter is enabled
`0` = Filter is disabled

bit 22-21 **MSEL22<1:0>:** Filter 22 Mask Select bits
`11` = Acceptance Mask 3 selected
`10` = Acceptance Mask 2 selected
`01` = Acceptance Mask 1 selected
`00` = Acceptance Mask 0 selected

bit 20-16 **FSEL22<4:0>:** FIFO Selection bits
`11111` = Message matching filter is stored in FIFO buffer 31
`11110` = Message matching filter is stored in FIFO buffer 30
•
•
•
`00001` = Message matching filter is stored in FIFO buffer 1
`00000` = Message matching filter is stored in FIFO buffer 0

Note: The bits in this register can only be modified if the corresponding filter enable (FLTENn) bit is ‘`0`’.

© 2009-2013 Microchip Technology Inc.

REGISTER 23-15: CiFLTCON5: CAN FILTER CONTROL REGISTER 5 (CONTINUED)

bit 15 **FLTEN21:** Filter 21 Enable bit

1 = Filter is enabled
0 = Filter is disabled

bit 14-13 **MSEL21<1:0>:** Filter 21 Mask Select bits

11 = Acceptance Mask 3 selected
10 = Acceptance Mask 2 selected
01 = Acceptance Mask 1 selected
00 = Acceptance Mask 0 selected

bit 12-8 **FSEL21<4:0>:** FIFO Selection bits

11111 = Message matching filter is stored in FIFO buffer 31
11110 = Message matching filter is stored in FIFO buffer 30
•
•
•
00001 = Message matching filter is stored in FIFO buffer 1
00000 = Message matching filter is stored in FIFO buffer 0

bit 7 **FLTEN20:** Filter 20 Enable bit

1 = Filter is enabled
0 = Filter is disabled

bit 6-5 **MSEL20<1:0>:** Filter 20 Mask Select bits

11 = Acceptance Mask 3 selected
10 = Acceptance Mask 2 selected
01 = Acceptance Mask 1 selected
00 = Acceptance Mask 0 selected

bit 4-0 **FSEL20<4:0>:** FIFO Selection bits

11111 = Message matching filter is stored in FIFO buffer 31
11110 = Message matching filter is stored in FIFO buffer 30
•
•
•
00001 = Message matching filter is stored in FIFO buffer 1
00000 = Message matching filter is stored in FIFO buffer 0

Note: The bits in this register can only be modified if the corresponding filter enable (FLTENn) bit is '0'.

REGISTER 23-16: CiFLTCON6: CAN FILTER CONTROL REGISTER 6

Bit Range	Bit 31/23/15/7	Bit 30/22/14/6	Bit 29/21/13/5	Bit 28/20/12/4	Bit 27/19/11/3	Bit 26/18/10/2	Bit 25/17/9/1	Bit 24/16/8/0
31:24	R/W-0	R/W-0	R/W-0	R/W-0	R/W-0	R/W-0	R/W-0	R/W-0
	FLTEN27	MSEL27<1:0>		FSEL27<4:0>				
23:16	R/W-0	R/W-0	R/W-0	R/W-0	R/W-0	R/W-0	R/W-0	R/W-0
	FLTEN26	MSEL26<1:0>		FSEL26<4:0>				
15:8	R/W-0	R/W-0	R/W-0	R/W-0	R/W-0	R/W-0	R/W-0	R/W-0
	FLTEN25	MSEL25<1:0>		FSEL25<4:0>				
7:0	R/W-0	R/W-0	R/W-0	R/W-0	R/W-0	R/W-0	R/W-0	R/W-0
	FLTEN24	MSEL24<1:0>		FSEL24<4:0>				

Legend:			
R = Readable bit	W = Writable bit	U = Unimplemented bit, read as ‘0’	
-n = Value at POR	‘1’ = Bit is set	‘0’ = Bit is cleared	x = Bit is unknown

bit 31 **FLTEN27:** Filter 27 Enable bit
1 = Filter is enabled
0 = Filter is disabled

bit 30-29 **MSEL27<1:0>:** Filter 27 Mask Select bits
11 = Acceptance Mask 3 selected
10 = Acceptance Mask 2 selected
01 = Acceptance Mask 1 selected
00 = Acceptance Mask 0 selected

bit 28-24 **FSEL27<4:0>:** FIFO Selection bits
11111 = Message matching filter is stored in FIFO buffer 31
11110 = Message matching filter is stored in FIFO buffer 30
•
•
•
00001 = Message matching filter is stored in FIFO buffer 1
00000 = Message matching filter is stored in FIFO buffer 0

bit 23 **FLTEN26:** Filter 26 Enable bit
1 = Filter is enabled
0 = Filter is disabled

bit 22-21 **MSEL26<1:0>:** Filter 26 Mask Select bits
11 = Acceptance Mask 3 selected
10 = Acceptance Mask 2 selected
01 = Acceptance Mask 1 selected
00 = Acceptance Mask 0 selected

bit 20-16 **FSEL26<4:0>:** FIFO Selection bits
11111 = Message matching filter is stored in FIFO buffer 31
11110 = Message matching filter is stored in FIFO buffer 30
•
•
•
00001 = Message matching filter is stored in FIFO buffer 1
00000 = Message matching filter is stored in FIFO buffer 0

Note: The bits in this register can only be modified if the corresponding filter enable (FLTENn) bit is ‘0’.

© 2009-2013 Microchip Technology Inc.

REGISTER 23-16: CiFLTCON6: CAN FILTER CONTROL REGISTER 6 (CONTINUED)

bit 15 **FLTEN25:** Filter 25 Enable bit

1 = Filter is enabled
0 = Filter is disabled

bit 14-13 **MSEL25<1:0>:** Filter 25 Mask Select bits

11 = Acceptance Mask 3 selected
10 = Acceptance Mask 2 selected
01 = Acceptance Mask 1 selected
00 = Acceptance Mask 0 selected

bit 12-8 **FSEL25<4:0>:** FIFO Selection bits

11111 = Message matching filter is stored in FIFO buffer 31
11110 = Message matching filter is stored in FIFO buffer 30
•
•
•
00001 = Message matching filter is stored in FIFO buffer 1
00000 = Message matching filter is stored in FIFO buffer 0

bit 7 **FLTEN24:** Filter 24 Enable bit

1 = Filter is enabled
0 = Filter is disabled

bit 6-5 **MSEL24<1:0>:** Filter 24 Mask Select bits

11 = Acceptance Mask 3 selected
10 = Acceptance Mask 2 selected
01 = Acceptance Mask 1 selected
00 = Acceptance Mask 0 selected

bit 4-0 **FSEL24<4:0>:** FIFO Selection bits

11111 = Message matching filter is stored in FIFO buffer 31
11110 = Message matching filter is stored in FIFO buffer 30
•
•
•
00001 = Message matching filter is stored in FIFO buffer 1
00000 = Message matching filter is stored in FIFO buffer 0

Note: The bits in this register can only be modified if the corresponding filter enable (FLTENn) bit is '0'.

REGISTER 23-17: CiFLTCON7: CAN FILTER CONTROL REGISTER 7

Bit Range	Bit 31/23/15/7	Bit 30/22/14/6	Bit 29/21/13/5	Bit 28/20/12/4	Bit 27/19/11/3	Bit 26/18/10/2	Bit 25/17/9/1	Bit 24/16/8/0
31:24	R/W-0	R/W-0	R/W-0	R/W-0	R/W-0	R/W-0	R/W-0	R/W-0
	FLTEN31	MSEL31<1:0>		FSEL31<4:0>				
23:16	R/W-0	R/W-0	R/W-0	R/W-0	R/W-0	R/W-0	R/W-0	R/W-0
	FLTEN30	MSEL30<1:0>		FSEL30<4:0>				
15:8	R/W-0	R/W-0	R/W-0	R/W-0	R/W-0	R/W-0	R/W-0	R/W-0
	FLTEN29	MSEL29<1:0>		FSEL29<4:0>				
7:0	R/W-0	R/W-0	R/W-0	R/W-0	R/W-0	R/W-0	R/W-0	R/W-0
	FLTEN28	MSEL28<1:0>		FSEL28<4:0>				

Legend:			
R = Readable bit	W = Writable bit	U = Unimplemented bit, read as ‘0’	
-n = Value at POR	‘1’ = Bit is set	‘0’ = Bit is cleared	x = Bit is unknown

bit 31 **FLTEN31:** Filter 31 Enable bit
1 = Filter is enabled
0 = Filter is disabled

bit 30-29 **MSEL31<1:0>:** Filter 31 Mask Select bits
11 = Acceptance Mask 3 selected
10 = Acceptance Mask 2 selected
01 = Acceptance Mask 1 selected
00 = Acceptance Mask 0 selected

bit 28-24 **FSEL31<4:0>:** FIFO Selection bits
11111 = Message matching filter is stored in FIFO buffer 31
11110 = Message matching filter is stored in FIFO buffer 30
•
•
•
00001 = Message matching filter is stored in FIFO buffer 1
00000 = Message matching filter is stored in FIFO buffer 0

bit 23 **FLTEN30:** Filter 30Enable bit
1 = Filter is enabled
0 = Filter is disabled

bit 22-21 **MSEL30<1:0>:** Filter 30Mask Select bits
11 = Acceptance Mask 3 selected
10 = Acceptance Mask 2 selected
01 = Acceptance Mask 1 selected
00 = Acceptance Mask 0 selected

bit 20-16 **FSEL30<4:0>:** FIFO Selection bits
11111 = Message matching filter is stored in FIFO buffer 31
11110 = Message matching filter is stored in FIFO buffer 30
•
•
•
00001 = Message matching filter is stored in FIFO buffer 1
00000 = Message matching filter is stored in FIFO buffer 0

Note: The bits in this register can only be modified if the corresponding filter enable (FLTENn) bit is ‘0’.

© 2009-2013 Microchip Technology Inc.

REGISTER 23-17: CiFLTCON7: CAN FILTER CONTROL REGISTER 7 (CONTINUED)

bit 15 **FLTEN29:** Filter 29 Enable bit

1 = Filter is enabled
0 = Filter is disabled

bit 14-13 **MSEL29<1:0>:** Filter 29 Mask Select bits

11 = Acceptance Mask 3 selected
10 = Acceptance Mask 2 selected
01 = Acceptance Mask 1 selected
00 = Acceptance Mask 0 selected

bit 12-8 **FSEL29<4:0>:** FIFO Selection bits

11111 = Message matching filter is stored in FIFO buffer 31
11110 = Message matching filter is stored in FIFO buffer 30
•
•
•
00001 = Message matching filter is stored in FIFO buffer 1
00000 = Message matching filter is stored in FIFO buffer 0

bit 7 **FLTEN28:** Filter 28 Enable bit

1 = Filter is enabled
0 = Filter is disabled

bit 6-5 **MSEL28<1:0>:** Filter 28 Mask Select bits

11 = Acceptance Mask 3 selected
10 = Acceptance Mask 2 selected
01 = Acceptance Mask 1 selected
00 = Acceptance Mask 0 selected

bit 4-0 **FSEL28<4:0>:** FIFO Selection bits

11111 = Message matching filter is stored in FIFO buffer 31
11110 = Message matching filter is stored in FIFO buffer 30
•
•
•
00001 = Message matching filter is stored in FIFO buffer 1
00000 = Message matching filter is stored in FIFO buffer 0

Note: The bits in this register can only be modified if the corresponding filter enable (FLTENn) bit is '0'.

REGISTER 23-18: CiRXFn: CAN ACCEPTANCE FILTER 'n' REGISTER 7 (n = 0 THROUGH 31)

Bit Range	Bit 31/23/15/7	Bit 30/22/14/6	Bit 29/21/13/5	Bit 28/20/12/4	Bit 27/19/11/3	Bit 26/18/10/2	Bit 25/17/9/1	Bit 24/16/8/0
31:24	R/W-x	R/W-x	R/W-x	R/W-x	R/W-x	R/W-x	R/W-x	R/W-x
	SID<10:3>							
23:16	R/W-x	R/W-x	R/W-x	U-0	R/W-0	U-0	R/W-x	R/W-x
	SID<2:0>			—	EXID	—	EID<17:16>	
15:8	R/W-x	R/W-x	R/W-x	R/W-x	R/W-x	R/W-x	R/W-x	R/W-x
	EID<15:8>							
7:0	R/W-x	R/W-x	R/W-x	R/W-x	R/W-x	R/W-x	R/W-x	R/W-x
	EID<7:0>							

Legend:			
R = Readable bit	W = Writable bit	U = Unimplemented bit, read as '0'	
-n = Value at POR	'1' = Bit is set	'0' = Bit is cleared	x = Bit is unknown

bit 31-21 **SID<10:0>:** Standard Identifier bits
1 = Message address bit SIDx must be '1' to match filter
0 = Message address bit SIDx must be '0' to match filter

bit 20 **Unimplemented:** Read as '0'

bit 19 **EXID:** Extended Identifier Enable bits
1 = Match only messages with extended identifier addresses
0 = Match only messages with standard identifier addresses

bit 18 **Unimplemented:** Read as '0'

bit 17-0 **EID<17:0>:** Extended Identifier bits
1 = Message address bit EIDx must be '1' to match filter
0 = Message address bit EIDx must be '0' to match filter

Note: This register can only be modified when the filter is disabled (FLTENn = 0).

© 2009-2013 Microchip Technology Inc.

REGISTER 23-19: CiFIFOBA: CAN MESSAGE BUFFER BASE ADDRESS REGISTER

Bit Range	Bit 31/23/15/7	Bit 30/22/14/6	Bit 29/21/13/5	Bit 28/20/12/4	Bit 27/19/11/3	Bit 26/18/10/2	Bit 25/17/9/1	Bit 24/16/8/0
31:24	R/W-0	R/W-0	R/W-0	R/W-0	R/W-0	R/W-0	R/W-0	R/W-0
	CiFIFOBA<31:24>							
23:16	R/W-0	R/W-0	R/W-0	R/W-0	R/W-0	R/W-0	R/W-0	R/W-0
	CiFIFOBA<23:16>							
15:8	R/W-0	R/W-0	R/W-0	R/W-0	R/W-0	R/W-0	R/W-0	R/W-0
	CiFIFOBA<15:8>							
7:0	R/W-0	R/W-0	R/W-0	R/W-0	R/W-0	R/W-0	R-0(1)	R-0(1)
	CiFIFOBA<7:0>							

Legend:			
R = Readable bit	W = Writable bit	U = Unimplemented bit, read as ‘0’	
-n = Value at POR	‘1’ = Bit is set	‘0’ = Bit is cleared	x = Bit is unknown

bit 31-0 **CiFIFOBA<31:0>:** CAN FIFO Base Address bits

These bits define the base address of all message buffers. Individual message buffers are located based on the size of the previous message buffers. This address is a physical address. Bits <1:0> are read-only and read as ‘0’, forcing the messages to be 32-bit word-aligned in device RAM.

Note 1: This bit is unimplemented and will always read ‘0’, which forces word-alignment of messages.

Note: This register can only be modified when the CAN module is in Configuration mode (OPMOD<2:0> (CiCON<23:21>) = 100).

REGISTER 23-20: CiFIFOCONn: CAN FIFO CONTROL REGISTER 'n' (n = 0 THROUGH 31)

Bit Range	Bit 31/23/15/7	Bit 30/22/14/6	Bit 29/21/13/5	Bit 28/20/12/4	Bit 27/19/11/3	Bit 26/18/10/2	Bit 25/17/9/1	Bit 24/16/8/0
31:24	U-0	U-0	U-0	U-0	U-0	U-0	U-0	U-0
	—	—	—	—	—	—	—	—
23:16	U-0	U-0	U-0	R/W-0	R/W-0	R/W-0	R/W-0	R/W-0
	—	—	—	FSIZE<4:0>(1)				
15:8	U-0	S/HC-0	S/HC-0	R/W-0	U-0	U-0	U-0	U-0
	—	FRESET	UINC	DONLY(1)	—	—	—	—
7:0	R/W-0	R-0	R-0	R-0	R/W-0	R/W-0	R/W-0	R/W-0
	TXEN	TXABAT(2)	TXLARB(3)	TXERR(3)	TXREQ	RTREN	TXPR<1:0>	

Legend:			
R = Readable bit	W = Writable bit	U = Unimplemented bit, read as '0'	
-n = Value at POR	'1' = Bit is set	'0' = Bit is cleared	x = Bit is unknown

bit 31-21 **Unimplemented:** Read as '0'

bit 20-16 **FSIZE<4:0>:** FIFO Size bits(1)

11111 = FIFO is 32 messages deep

•

•

•

00010 = FIFO is 3 messages deep
00001 = FIFO is 2 messages deep
00000 = FIFO is 1 message deep

bit 15 **Unimplemented:** Read as '0'

bit 14 **FRESET:** FIFO Reset bits

1 = FIFO will be reset when bit is set, cleared by hardware when FIFO is reset. After setting, the user should poll whether this bit is clear before taking any action.
0 = No effect

bit 13 **UINC:** Increment Head/Tail bit

TXEN = 1: (FIFO configured as a Transmit FIFO)
When this bit is set the FIFO head will increment by a single message

TXEN = 0: (FIFO configured as a Receive FIFO)
When this bit is set the FIFO tail will increment by a single message

bit 12 **DONLY:** Store Message Data Only bit(1)

TXEN = 1: (FIFO configured as a Transmit FIFO)
This bit is not used and has no effect.

TXEN = 0: (FIFO configured as a Receive FIFO)
1 = Only data bytes will be stored in the FIFO
0 = Full message is stored, including identifier

bit 11-8 **Unimplemented:** Read as '0'

bit 7 **TXEN:** TX/RX Buffer Selection bit

1 = FIFO is a Transmit FIFO
0 = FIFO is a Receive FIFO

Note 1: These bits can only be modified when the CAN module is in Configuration mode (OPMOD<2:0> bits (CiCON<23:21>) = 100).

2: This bit is updated when a message completes (or aborts) or when the FIFO is reset.

3: This bit is reset on any read of this register or when the FIFO is reset.

© 2009-2013 Microchip Technology Inc.

REGISTER 23-20: CiFIFOCONn: CAN FIFO CONTROL REGISTER 'n' (n = 0 THROUGH 31)

bit 6 **TXABAT:** Message Aborted bit(2)

1 = Message was aborted
0 = Message completed successfully

bit 5 **TXLARB:** Message Lost Arbitration bit(3)

1 = Message lost arbitration while being sent
0 = Message did not lose arbitration while being sent

bit 4 **TXERR:** Error Detected During Transmission bit(3)

1 = A bus error occured while the message was being sent
0 = A bus error did not occur while the message was being sent

bit 3 **TXREQ:** Message Send Request

TXEN = 1: (FIFO configured as a Transmit FIFO)
Setting this bit to '1' requests sending a message.
The bit will automatically clear when all the messages queued in the FIFO are successfully sent.
Clearing the bit to '0' while set ('1') will request a message abort.

TXEN = 0: (FIFO configured as a receive FIFO)
This bit has no effect.

bit 2 **RTREN:** Auto RTR Enable bit

1 = When a remote transmit is received, TXREQ will be set
0 = When a remote transmit is received, TXREQ will be unaffected

bit 1-0 **TXPR<1:0>:** Message Transmit Priority bits

11 = Highest message priority
10 = High intermediate message priority
01 = Low intermediate message priority
00 = Lowest message priority

Note 1: These bits can only be modified when the CAN module is in Configuration mode (OPMOD<2:0> bits (CiCON<23:21>) = 100).

2: This bit is updated when a message completes (or aborts) or when the FIFO is reset.

3: This bit is reset on any read of this register or when the FIFO is reset.

REGISTER 23-21: CiFIFOINTn: CAN FIFO INTERRUPT REGISTER 'n' (n = 0 THROUGH 31)

Bit Range	Bit 31/23/15/7	Bit 30/22/14/6	Bit 29/21/13/5	Bit 28/20/12/4	Bit 27/19/11/3	Bit 26/18/10/2	Bit 25/17/9/1	Bit 24/16/8/0
31:24	U-0	U-0	U-0	U-0	U-0	R/W-0	R/W-0	R/W-0
	—	—	—	—	—	TXNFULLIE	TXHALFIE	TXEMPTYIE
23:16	U-0	U-0	U-0	U-0	R/W-0	R/W-0	R/W-0	R/W-0
	—	—	—	—	RXOVFLIE	RXFULLIE	RXHALFIE	RXNEMPTYIE
15:8	U-0	U-0	U-0	U-0	U-0	R-0	R-0	R-0
	—	—	—	—	—	TXNFULLIF(1)	TXHALFIF	TXEMPTYIF(1)
7:0	U-0	U-0	U-0	U-0	R/W-0	R-0	R-0	R-0
	—	—	—	—	RXOVFLIF	RXFULLIF(1)	RXHALFIF(1)	RXNEMPTYIF(1)

Legend:			
R = Readable bit	W = Writable bit	U = Unimplemented bit, read as '0'	
-n = Value at POR	'1' = Bit is set	'0' = Bit is cleared	x = Bit is unknown

bit 31-27 **Unimplemented:** Read as '0'

bit 26 **TXNFULLIE:** Transmit FIFO Not Full Interrupt Enable bit
1 = Interrupt enabled for FIFO not full
0 = Interrupt disabled for FIFO not full

bit 25 **TXHALFIE:** Transmit FIFO Half Full Interrupt Enable bit
1 = Interrupt enabled for FIFO half full
0 = Interrupt disabled for FIFO half full

bit 24 **TXEMPTYIE:** Transmit FIFO Empty Interrupt Enable bit
1 = Interrupt enabled for FIFO empty
0 = Interrupt disabled for FIFO empty

bit 23-20 **Unimplemented:** Read as '0'

bit 19 **RXOVFLIE:** Overflow Interrupt Enable bit
1 = Interrupt enabled for overflow event
0 = Interrupt disabled for overflow event

bit 18 **RXFULLIE:** Full Interrupt Enable bit
1 = Interrupt enabled for FIFO full
0 = Interrupt disabled for FIFO full

bit 17 **RXHALFIE:** FIFO Half Full Interrupt Enable bit
1 = Interrupt enabled for FIFO half full
0 = Interrupt disabled for FIFO half full

bit 16 **RXNEMPTYIE:** Empty Interrupt Enable bit
1 = Interrupt enabled for FIFO not empty
0 = Interrupt disabled for FIFO not empty

bit 15-11 **Unimplemented:** Read as '0'

bit 10 **TXNFULLIF:** Transmit FIFO Not Full Interrupt Flag bit(1)
TXEN = 1: (FIFO configured as a transmit buffer)
1 = FIFO is not full
0 = FIFO is full

TXEN = 0: (FIFO configured as a receive buffer)
Unused, reads '0'

Note 1: This bit is read-only and reflects the status of the FIFO.

© 2009-2013 Microchip Technology Inc.

REGISTER 23-21: CiFIFOINTn: CAN FIFO INTERRUPT REGISTER 'n' (n = 0 THROUGH 31)

bit 9 **TXHALFIF:** FIFO Transmit FIFO Half Empty Interrupt Flag bit(1)

TXEN = 1: (FIFO configured as a transmit buffer)
1 = FIFO is ≤ half full
0 = FIFO is > half full

TXEN = 0: (FIFO configured as a receive buffer)
Unused, reads '0'

bit 8 **TXEMPTYIF:** Transmit FIFO Empty Interrupt Flag bit(1)

TXEN = 1: (FIFO configured as a transmit buffer)
1 = FIFO is empty
0 = FIFO is not empty, at least 1 message queued to be transmitted

TXEN = 0: (FIFO configured as a receive buffer)
Unused, reads '0'

bit 7-4 **Unimplemented:** Read as '0'

bit 3 **RXOVFLIF:** Receive FIFO Overflow Interrupt Flag bit

TXEN = 1: (FIFO configured as a transmit buffer)
Unused, reads '0'

TXEN = 0: (FIFO configured as a receive buffer)
1 = Overflow event has occurred
0 = No overflow event occured

bit 2 **RXFULLIF:** Receive FIFO Full Interrupt Flag bit(1)

TXEN = 1: (FIFO configured as a transmit buffer)
Unused, reads '0'

TXEN = 0: (FIFO configured as a receive buffer)
1 = FIFO is full
0 = FIFO is not full

bit 1 **RXHALFIF:** Receive FIFO Half Full Interrupt Flag bit(1)

TXEN = 1: (FIFO configured as a transmit buffer)
Unused, reads '0'

TXEN = 0: (FIFO configured as a receive buffer)
1 = FIFO is ≥ half full
0 = FIFO is < half full

bit 0 **RXNEMPTYIF:** Receive Buffer Not Empty Interrupt Flag bit(1)

TXEN = 1: (FIFO configured as a transmit buffer)
Unused, reads '0'

TXEN = 0: (FIFO configured as a receive buffer)
1 = FIFO is not empty, has at least 1 message
0 = FIFO is empty

Note 1: This bit is read-only and reflects the status of the FIFO.

REGISTER 23-22: CiFIFOUAn: CAN FIFO USER ADDRESS REGISTER ‘n’ (n = 0 THROUGH 31)

Bit Range	Bit 31/23/15/7	Bit 30/22/14/6	Bit 29/21/13/5	Bit 28/20/12/4	Bit 27/19/11/3	Bit 26/18/10/2	Bit 25/17/9/1	Bit 24/16/8/0
31:24	R-x	R-x	R-x	R-x	R-x	R-x	R-x	R-x
	CiFIFOUAn<31:24>							
23:16	R-x	R-x	R-x	R-x	R-x	R-x	R-x	R-x
	CiFIFOUAn<23:16>							
15:8	R-x	R-x	R-x	R-x	R-x	R-x	R-x	R-x
	CiFIFOUAn<15:8>							
7:0	R-x	R-x	R-x	R-x	R-x	R-x	R-0(1)	R-0(1)
	CiFIFOUAn<7:0>							

Legend:			
R = Readable bit	W = Writable bit	U = Unimplemented bit, read as ‘0’	
-n = Value at POR	‘1’ = Bit is set	‘0’ = Bit is cleared	x = Bit is unknown

bit 31-0 **CiFIFOUAn<31:0>:** CAN FIFO User Address bits

TXEN = 1: (FIFO configured as a transmit buffer)

A read of this register will return the address where the next message is to be written (FIFO head).

TXEN = 0: (FIFO configured as a receive buffer)

A read of this register will return the address where the next message is to be read (FIFO tail).

Note 1: This bit will always read ‘0’, which forces byte-alignment of messages.

Note: This register is not guaranteed to read correctly in Configuration mode, and should only be accessed when the module is not in Configuration mode.

REGISTER 23-23: CiFIFOCIN: CAN MODULE MESSAGE INDEX REGISTER ‘n’ (n = 0 THROUGH 31)

Bit Range	Bit 31/23/15/7	Bit 30/22/14/6	Bit 29/21/13/5	Bit 28/20/12/4	Bit 27/19/11/3	Bit 26/18/10/2	Bit 25/17/9/1	Bit 24/16/8/0
31:24	U-0	U-0	U-0	U-0	U-0	U-0	U-0	U-0
	—	—	—	—	—	—	—	—
23:16	U-0	U-0	U-0	U-0	U-0	U-0	U-0	U-0
	—	—	—	—	—	—	—	—
15:8	U-0	U-0	U-0	U-0	U-0	U-0	U-0	U-0
	—	—	—	—	—	—	—	—
7:0	U-0	U-0	U-0	R-0	R-0	R-0	R-0	R-0
	—	—	—	CiFIFOCI<4:0>				

Legend:			
R = Readable bit	W = Writable bit	U = Unimplemented bit, read as ‘0’	
-n = Value at POR	‘1’ = Bit is set	‘0’ = Bit is cleared	x = Bit is unknown

bit 31-5 **Unimplemented:** Read as ‘0’

bit 4-0 **CiFIFOCIn<4:0>:** CAN Side FIFO Message Index bits

TXEN = 1: (FIFO configured as a transmit buffer)
A read of this register will return an index to the message that the FIFO will next attempt to transmit.

TXEN = 0: (FIFO configured as a receive buffer)
A read of this register will return an index to the message that the FIFO will use to save the next message.

© 2009-2013 Microchip Technology Inc.

24.0 ETHERNET CONTROLLER

Note 1: This data sheet summarizes the features of the PIC32MX5XX/6XX/7XX family of devices. It is not intended to be a comprehensive reference source. To complement the information in this data sheet, refer to **Section 35. "Ethernet Controller"** (DS60001155) in the *"PIC32 Family Reference Manual"*, which is available from the Microchip web site (www.microchip.com/PIC32).

2: Some registers and associated bits described in this section may not be available on all devices. Refer to **Section 4.0 "Memory Organization"** in this data sheet for device-specific register and bit information.

The Ethernet controller is a bus master module that interfaces with an off-chip Physical Layer (PHY) to implement a complete Ethernet node in a system.

Key features of the Ethernet Controller include:

- Supports 10/100 Mbps data transfer rates
- Supports full-duplex and half-duplex operation
- Supports RMII and MII PHY interface
- Supports MIIM PHY management interface
- Supports both manual and automatic Flow Control
- RAM descriptor-based DMA operation for both receive and transmit path
- Fully configurable interrupts
- Configurable receive packet filtering
  - CRC check
  - 64-byte pattern match
  - Broadcast, multicast and unicast packets
  - Magic Packet™
  - 64-bit hash table
  - Runt packet
- Supports packet payload checksum calculation
- Supports various hardware statistics counters

Figure 24-1 illustrates a block diagram of the Ethernet controller.

FIGURE 24-1: ETHERNET CONTROLLER BLOCK DIAGRAM

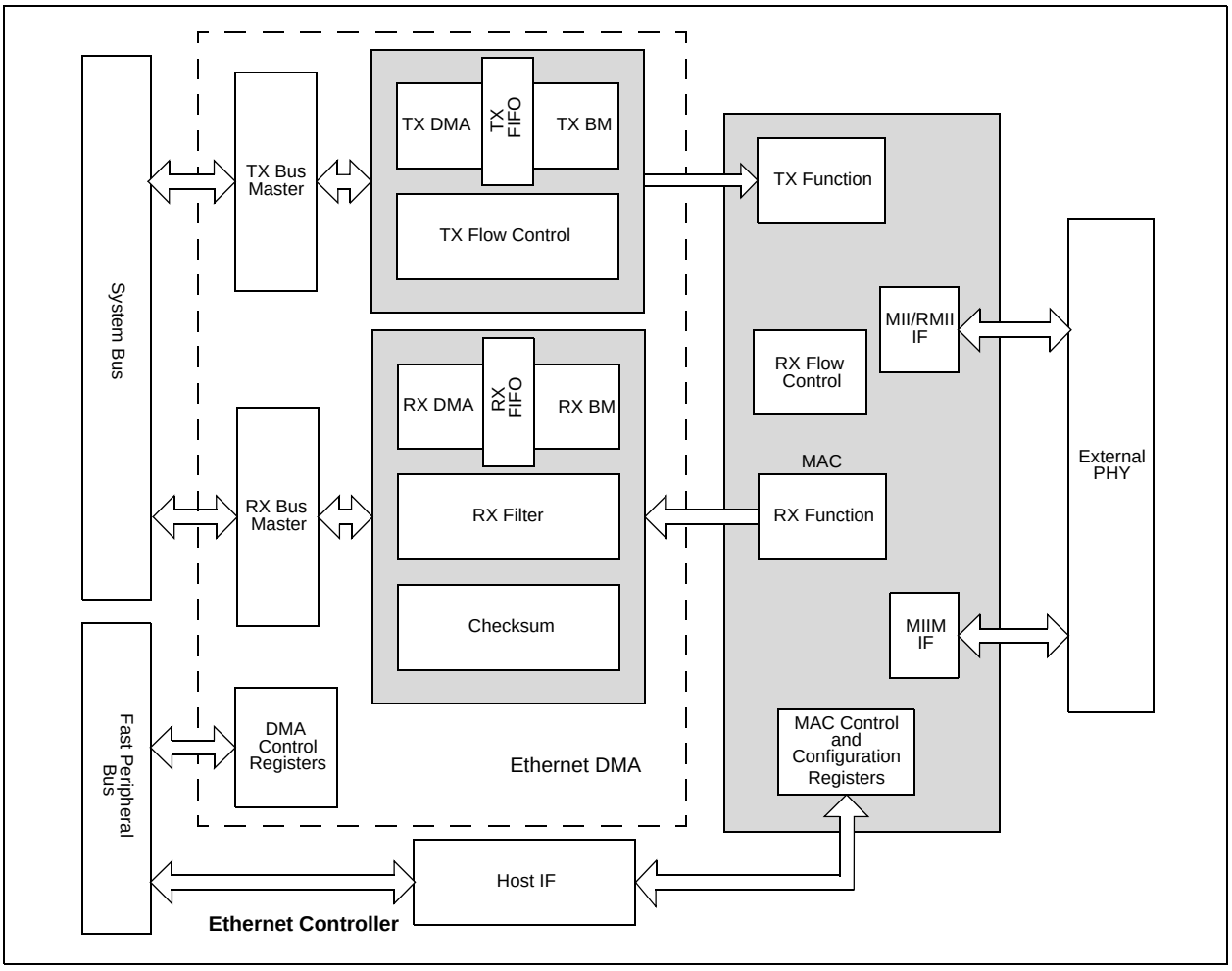

Table 24-1, Table 24-2, Table 24-3 and Table 24-4 show four interfaces and the associated pins that can be used with the Ethernet Controller.

TABLE 24-1: MII MODE DEFAULT INTERFACE SIGNALS (FMIIEN = 1, FETHIO = 1)

Pin Name	Description
EMDC	Management Clock
EMDIO	Management I/O
ETXCLK	Transmit Clock
ETXEN	Transmit Enable
ETXD0	Transmit Data
ETXD1	Transmit Data
ETXD2	Transmit Data
ETXD3	Transmit Data
ETXERR	Transmit Error
ERXCLK	Receive Clock
ERXDV	Receive Data Valid
ERXD0	Receive Data
ERXD1	Receive Data
ERXD2	Receive Data
ERXD3	Receive Data
ERXERR	Receive Error
ECRS	Carrier Sense
ECOL	Collision Indication

TABLE 24-2: RMII MODE DEFAULT INTERFACE SIGNALS (FMIIEN = 0, FETHIO = 1)

Pin Name	Description
EMDC	Management Clock
EMDIO	Management I/O
ETXEN	Transmit Enable
ETXD0	Transmit Data
ETXD1	Transmit Data
EREFCLK	Reference Clock
ECRSDV	Carrier Sense – Receive Data Valid
ERXD0	Receive Data
ERXD1	Receive Data
ERXERR	Receive Error

Note: Ethernet controller pins that are not used by selected interface can be used by other peripherals.

TABLE 24-3: MII MODE ALTERNATE INTERFACE SIGNALS (FMIIEN = 1, FETHIO = 0)

Pin Name	Description
AEMDC	Management Clock
AEMDIO	Management I/O
AETXCLK	Transmit Clock
AETXEN	Transmit Enable
AETXD0	Transmit Data
AETXD1	Transmit Data
AETXD2	Transmit Data
AETXD3	Transmit Data
AETXERR	Transmit Error
AERXCLK	Receive Clock
AERXDV	Receive Data Valid
AERXD0	Receive Data
AERXD1	Receive Data
AERXD2	Receive Data
AERXD3	Receive Data
AERXERR	Receive Error
AECRS	Carrier Sense
AECOL	Collision Indication

Note: The MII mode Alternate Interface is not available on 64-pin devices.

TABLE 24-4: RMII MODE ALTERNATE INTERFACE SIGNALS (FMIIEN = 0, FETHIO = 0)

Pin Name	Description
AEMDC	Management Clock
AEMDIO	Management I/O
AETXEN	Transmit Enable
AETXD0	Transmit Data
AETXD1	Transmit Data
AEREFCLK	Reference Clock
AECRSDV	Carrier Sense – Receive Data Valid
AERXD0	Receive Data
AERXD1	Receive Data
AERXERR	Receive Error

© 2009-2013 Microchip Technology Inc.

24.1 Control Registers

REGISTER 24-1: ETHCON1: ETHERNET CONTROLLER CONTROL REGISTER 1

Bit Range	Bit 31/23/15/7	Bit 30/22/14/6	Bit 29/21/13/5	Bit 28/20/12/4	Bit 27/19/11/3	Bit 26/18/10/2	Bit 25/17/9/1	Bit 24/16/8/0
31:24	R/W-0	R/W-0	R/W-0	R/W-0	R/W-0	R/W-0	R/W-0	R/W-0
	PTV<15:8>							
23:16	R/W-0	R/W-0	R/W-0	R/W-0	R/W-0	R/W-0	R/W-0	R/W-0
	PTV<7:0>							
15:8	R/W-0	U-0	R/W-0	U-0	U-0	U-0	R/W-0	R/W-0
	ON	—	SIDL	—	—	—	TXRTS	RXEN(1)
7:0	R/W-0	U-0	U-0	R/W-0	U-0	U-0	U-0	R/W-0
	AUTOFC	—	—	MANFC	—	—	—	BUFCDEC

Legend:			
R = Readable bit	W = Writable bit	U = Unimplemented bit, read as ‘0’	
-n = Value at POR	‘1’ = Bit is set	‘0’ = Bit is cleared	x = Bit is unknown

bit 31-16 **PTV<15:0>:** PAUSE Timer Value bits
PAUSE Timer Value used for Flow Control.
This register should only be written when RXEN (ETHCON1<8>) is not set.

These bits are only used for Flow Control operations.

bit 15 **ON:** Ethernet ON bit
1 = Ethernet module is enabled
0 = Ethernet module is disabled

bit 14 **Unimplemented:** Read as ‘0’

bit 13 **SIDL:** Ethernet Stop in Idle Mode bit
1 = Ethernet module transfers are paused during Idle mode
0 = Ethernet module transfers continue during Idle mode

bit 12-10 **Unimplemented:** Read as ‘0’

bit 9 **TXRTS:** Transmit Request to Send bit
1 = Activate the TX logic and send the packet(s) defined in the TX EDT
0 = Stop transmit (when cleared by software) or transmit done (when cleared by hardware)

After the bit is written with a ‘1’, it will clear to a ‘0’ whenever the transmit logic has finished transmitting the requested packets in the Ethernet Descriptor Table (EDT). If a ‘0’ is written by the CPU, the transmit logic finishes the current packet’s transmission and then stops any further.

This bit only affects TX operations.

bit 8 **RXEN:** Receive Enable bit(1)
1 = Enable RX logic, packets are received and stored in the RX buffer as controlled by the filter configuration
0 = Disable RX logic, no packets are received in the RX buffer

This bit only affects RX operations.

Note 1: It is not recommended to clear the RXEN bit and then make changes to any RX related field/register. The Ethernet Controller must be reinitialized (ON cleared to ‘0’), and then the RX changes applied.

REGISTER 24-1: ETHCON1: ETHERNET CONTROLLER CONTROL REGISTER 1 (CONTINUED)

bit 7 **AUTOFC:** Automatic Flow Control bit

1 = Automatic Flow Control is enabled
0 = Automatic Flow Control is disabled

Setting this bit will enable automatic Flow Control. If set, the full and empty watermarks are used to automatically enable and disable the Flow Control, respectively. When the number of received buffers BUFCNT (ETHSTAT<16:23>) rises to the full watermark, Flow Control is automatically enabled. When the BUFCNT falls to the empty watermark, Flow Control is automatically disabled.

This bit is only used for Flow Control operations and affects both TX and RX operations.

bit 6-5 **Unimplemented:** Read as '0'

bit 4 **MANFC:** Manual Flow Control bit

1 = Manual Flow Control is enabled
0 = Manual Flow Control is disabled

Setting this bit will enable manual Flow Control. If set, the Flow Control logic will send a PAUSE frame using the PAUSE timer value in the PTV register. It will then resend a PAUSE frame every 128 * PTV<15:0>/2 TX clock cycles until the bit is cleared.

Note: For 10 Mbps operation, TX clock runs at 2.5 MHz. For 100 Mbps operation, TX clock runs at 25 MHz.

When this bit is cleared, the Flow Control logic will automatically send a PAUSE frame with a 0x0000 PAUSE timer value to disable Flow Control.

This bit is only used for Flow Control operations and affects both TX and RX operations.

bit 3-1 **Unimplemented:** Read as '0'

bit 0 **BUFCDEC:** Descriptor Buffer Count Decrement bit

The BUFCDEC bit is a write-1 bit that reads as '0'. When written with a '1', the Descriptor Buffer Counter, BUFCNT, will decrement by one. If BUFCNT is incremented by the RX logic at the same time that this bit is written, the BUFCNT value will remain unchanged. Writing a '0' will have no effect.

This bit is only used for RX operations.

Note 1: It is not recommended to clear the RXEN bit and then make changes to any RX related field/register. The Ethernet Controller must be reinitialized (ON cleared to '0'), and then the RX changes applied.

© 2009-2013 Microchip Technology Inc.

REGISTER 24-2: ETHCON2: ETHERNET CONTROLLER CONTROL REGISTER 2

Bit Range	Bit 31/23/15/7	Bit 30/22/14/6	Bit 29/21/13/5	Bit 28/20/12/4	Bit 27/19/11/3	Bit 26/18/10/2	Bit 25/17/9/1	Bit 24/16/8/0
31:24	U-0	U-0	U-0	U-0	U-0	U-0	U-0	U-0
	—	—	—	—	—	—	—	—
23:16	U-0	U-0	U-0	U-0	U-0	U-0	U-0	U-0
	—	—	—	—	—	—	—	—
15:8	U-0	U-0	U-0	U-0	U-0	R/W-0	R/W-0	R/W-0
	—	—	—	—	—	RXBUFSZ<6:4>		
7:0	R/W-0	R/W-0	R/W-0	R/W-0	U-0	U-0	U-0	U-0
	RXBUFSZ<3:0>				—	—	—	—

Legend:			
R = Readable bit	W = Writable bit	U = Unimplemented bit, read as ‘0’	
-n = Value at POR	‘1’ = Bit is set	‘0’ = Bit is cleared	x = Bit is unknown

bit 31-11 **Unimplemented:** Read as ‘0’

bit 10-4 **RXBUFSZ<6:0>:** RX Data Buffer Size for All RX Descriptors (in 16-byte increments) bits

1111111 = RX data Buffer size for descriptors is 2032 bytes
•
•
•
1100000 = RX data Buffer size for descriptors is 1536 bytes
•
•
•
0000011 = RX data Buffer size for descriptors is 48 bytes
0000010 = RX data Buffer size for descriptors is 32 bytes
0000001 = RX data Buffer size for descriptors is 16 bytes
0000000 = Reserved

bit 3-0 **Unimplemented:** Read as ‘0’

Note 1: This register is only used for RX operations.
2: The bits in this register may only be changed while the RXEN bit (ETHCON1<8>) = 0.

REGISTER 24-3: ETHTXST: ETHERNET CONTROLLER TX PACKET DESCRIPTOR START ADDRESS REGISTER

Bit Range	Bit 31/23/15/7	Bit 30/22/14/6	Bit 29/21/13/5	Bit 28/20/12/4	Bit 27/19/11/3	Bit 26/18/10/2	Bit 25/17/9/1	Bit 24/16/8/0
31:24	R/W-0	R/W-0	R/W-0	R/W-0	R/W-0	R/W-0	R/W-0	R/W-0
	TXSTADDR<31:24>							
23:16	R/W-0	R/W-0	R/W-0	R/W-0	R/W-0	R/W-0	R/W-0	R/W-0
	TXSTADDR<23:16>							
15:8	R/W-0	R/W-0	R/W-0	R/W-0	R/W-0	R/W-0	R/W-0	R/W-0
	TXSTADDR<15:8>							
7:0	R/W-0	R/W-0	R/W-0	R/W-0	R/W-0	R/W-0	U-0	U-0
	TXSTADDR<7:2>						—	—

Legend:			
R = Readable bit	W = Writable bit	U = Unimplemented bit, read as ‘0’	
-n = Value at POR	‘1’ = Bit is set	‘0’ = Bit is cleared	x = Bit is unknown

bit 31-2 **TXSTADDR<31:2>:** Starting Address of First Transmit Descriptor bits
This register should not be written while any transmit, receive or DMA operations are in progress.
This address must be 4-byte aligned (bits 1-0 must be ‘00’).

bit 1-0 **Unimplemented:** Read as ‘0’

Note 1: This register is only used for TX operations.
2: This register will be updated by hardware with the last descriptor used by the last successfully transmitted packet.

REGISTER 24-4: ETHRXST: ETHERNET CONTROLLER RX PACKET DESCRIPTOR START ADDRESS REGISTER

Bit Range	Bit 31/23/15/7	Bit 30/22/14/6	Bit 29/21/13/5	Bit 28/20/12/4	Bit 27/19/11/3	Bit 26/18/10/2	Bit 25/17/9/1	Bit 24/16/8/0
31:24	R/W-0	R/W-0	R/W-0	R/W-0	R/W-0	R/W-0	R/W-0	R/W-0
	RXSTADDR<31:24>							
23:16	R/W-0	R/W-0	R/W-0	R/W-0	R/W-0	R/W-0	R/W-0	R/W-0
	RXSTADDR<23:16>							
15:8	R/W-0	R/W-0	R/W-0	R/W-0	R/W-0	R/W-0	R/W-0	R/W-0
	RXSTADDR<15:8>							
7:0	R/W-0	R/W-0	R/W-0	R/W-0	R/W-0	R/W-0	U-0	U-0
	RXSTADDR<7:2>						—	—

Legend:			
R = Readable bit	W = Writable bit	U = Unimplemented bit, read as ‘0’	
-n = Value at POR	‘1’ = Bit is set	‘0’ = Bit is cleared	x = Bit is unknown

bit 31-2 **RXSTADDR<31:2>:** Starting Address of First Receive Descriptor bits
This register should not be written while any transmit, receive or DMA operations are in progress.
This address must be 4-byte aligned (bits 1-0 must be ‘00’).

bit 1-0 **Unimplemented:** Read as ‘0’

Note 1: This register is only used for RX operations.
2: This register will be updated by hardware with the last descriptor used by the last successfully transmitted packet.

© 2009-2013 Microchip Technology Inc.

REGISTER 24-5: ETHHT0: ETHERNET CONTROLLER HASH TABLE 0 REGISTER

Bit Range	Bit 31/23/15/7	Bit 30/22/14/6	Bit 29/21/13/5	Bit 28/20/12/4	Bit 27/19/11/3	Bit 26/18/10/2	Bit 25/17/9/1	Bit 24/16/8/0
31:24	R/W-0	R/W-0	R/W-0	R/W-0	R/W-0	R/W-0	R/W-0	R/W-0
	HT<31:24>							
23:16	R/W-0	R/W-0	R/W-0	R/W-0	R/W-0	R/W-0	R/W-0	R/W-0
	HT<23:16>							
15:8	R/W-0	R/W-0	R/W-0	R/W-0	R/W-0	R/W-0	R/W-0	R/W-0
	HT<15:8>							
7:0	R/W-0	R/W-0	R/W-0	R/W-0	R/W-0	R/W-0	R/W-0	R/W-0
	HT<7:0>							

Legend:			
R = Readable bit	W = Writable bit	U = Unimplemented bit, read as ‘0’	
-n = Value at POR	‘1’ = Bit is set	‘0’ = Bit is cleared	x = Bit is unknown

bit 31-0 **HT<31:0>:** Hash Table Bytes 0-3 bits

Note 1: This register is only used for RX operations.
2: The bits in this register may only be changed while the RXEN bit (ETHCON1<8>) = `0` or the HTEN bit (ETHRXFC<15>) = `0`.

REGISTER 24-6: ETHHT1: ETHERNET CONTROLLER HASH TABLE 1 REGISTER

Bit Range	Bit 31/23/15/7	Bit 30/22/14/6	Bit 29/21/13/5	Bit 28/20/12/4	Bit 27/19/11/3	Bit 26/18/10/2	Bit 25/17/9/1	Bit 24/16/8/0
31:24	R/W-0	R/W-0	R/W-0	R/W-0	R/W-0	R/W-0	R/W-0	R/W-0
	HT<63:56>							
23:16	R/W-0	R/W-0	R/W-0	R/W-0	R/W-0	R/W-0	R/W-0	R/W-0
	HT<55:48>							
15:8	R/W-0	R/W-0	R/W-0	R/W-0	R/W-0	R/W-0	R/W-0	R/W-0
	HT<47:40>							
7:0	R/W-0	R/W-0	R/W-0	R/W-0	R/W-0	R/W-0	R/W-0	R/W-0
	HT<39:32>							

Legend:			
R = Readable bit	W = Writable bit	U = Unimplemented bit, read as ‘0’	
-n = Value at POR	‘1’ = Bit is set	‘0’ = Bit is cleared	x = Bit is unknown

bit 31-0 **HT<63:32>:** Hash Table Bytes 4-7 bits

Note 1: This register is only used for RX operations.
2: The bits in this register may only be changed while the RXEN bit (ETHCON1<8>) = `0` or the HTEN bit (ETHRXFC<15>) = `0`.

REGISTER 24-7: ETHPMM0: ETHERNET CONTROLLER PATTERN MATCH MASK 0 REGISTER

Bit Range	Bit 31/23/15/7	Bit 30/22/14/6	Bit 29/21/13/5	Bit 28/20/12/4	Bit 27/19/11/3	Bit 26/18/10/2	Bit 25/17/9/1	Bit 24/16/8/0
31:24	R/W-0	R/W-0	R/W-0	R/W-0	R/W-0	R/W-0	R/W-0	R/W-0
	PMM<31:24>							
23:16	R/W-0	R/W-0	R/W-0	R/W-0	R/W-0	R/W-0	R/W-0	R/W-0
	PMM<23:16>							
15:8	R/W-0	R/W-0	R/W-0	R/W-0	R/W-0	R/W-0	R/W-0	R/W-0
	PMM<15:8>							
7:0	R/W-0	R/W-0	R/W-0	R/W-0	R/W-0	R/W-0	R/W-0	R/W-0
	PMM<7:0>							

Legend:			
R = Readable bit	W = Writable bit	U = Unimplemented bit, read as ‘0’	
-n = Value at POR	‘1’ = Bit is set	‘0’ = Bit is cleared	x = Bit is unknown

bit 31-24 **PMM<31:24>:** Pattern Match Mask 3 bits
bit 23-16 **PMM<23:16>:** Pattern Match Mask 2 bits
bit 15-8 **PMM<15:8>:** Pattern Match Mask 1 bits
bit 7-0 **PMM<7:0>:** Pattern Match Mask 0 bits

Note 1: This register is only used for RX operations.
2: The bits in this register may only be changed while the RXEN bit (ETHCON1<8>) = `0` or the PMMODE bit (ETHRXFC<11:8>) = `0`.

REGISTER 24-8: ETHPMM1: ETHERNET CONTROLLER PATTERN MATCH MASK 1 REGISTER

Bit Range	Bit 31/23/15/7	Bit 30/22/14/6	Bit 29/21/13/5	Bit 28/20/12/4	Bit 27/19/11/3	Bit 26/18/10/2	Bit 25/17/9/1	Bit 24/16/8/0
31:24	R/W-0	R/W-0	R/W-0	R/W-0	R/W-0	R/W-0	R/W-0	R/W-0
	PMM<63:56>							
23:16	R/W-0	R/W-0	R/W-0	R/W-0	R/W-0	R/W-0	R/W-0	R/W-0
	PMM<55:48>							
15:8	R/W-0	R/W-0	R/W-0	R/W-0	R/W-0	R/W-0	R/W-0	R/W-0
	PMM<47:40>							
7:0	R/W-0	R/W-0	R/W-0	R/W-0	R/W-0	R/W-0	R/W-0	R/W-0
	PMM<39:32>							

Legend:			
R = Readable bit	W = Writable bit	U = Unimplemented bit, read as ‘0’	
-n = Value at POR	‘1’ = Bit is set	‘0’ = Bit is cleared	x = Bit is unknown

bit 31-24 **PMM<63:56>:** Pattern Match Mask 7 bits
bit 23-16 **PMM<55:48>:** Pattern Match Mask 6 bits
bit 15-8 **PMM<47:40>:** Pattern Match Mask 5 bits
bit 7-0 **PMM<39:32>:** Pattern Match Mask 4 bits

Note 1: This register is only used for RX operations.
2: The bits in this register may only be changed while the RXEN bit (ETHCON1<8>) = `0` or the PMMODE bit (ETHRXFC<11:8>) = `0`.

© 2009-2013 Microchip Technology Inc.

REGISTER 24-9: ETHPMCS: ETHERNET CONTROLLER PATTERN MATCH CHECKSUM REGISTER

Bit Range	Bit 31/23/15/7	Bit 30/22/14/6	Bit 29/21/13/5	Bit 28/20/12/4	Bit 27/19/11/3	Bit 26/18/10/2	Bit 25/17/9/1	Bit 24/16/8/0
31:24	U-0	U-0	U-0	U-0	U-0	U-0	U-0	U-0
	—	—	—	—	—	—	—	—
23:16	U-0	U-0	U-0	U-0	U-0	U-0	U-0	U-0
	—	—	—	—	—	—	—	—
15:8	R/W-0	R/W-0	R/W-0	R/W-0	R/W-0	R/W-0	R/W-0	R/W-0
	PMCS<15:8>							
7:0	R/W-0	R/W-0	R/W-0	R/W-0	R/W-0	R/W-0	R/W-0	R/W-0
	PMCS<7:0>							

Legend:			
R = Readable bit	W = Writable bit	U = Unimplemented bit, read as ‘0’	
-n = Value at POR	‘1’ = Bit is set	‘0’ = Bit is cleared	x = Bit is unknown

bit 31-16 **Unimplemented:** Read as ‘0’

bit 15-8 **PMCS<15:8>:** Pattern Match Checksum 1 bits

bit 7-0 **PMCS<7:0>:** Pattern Match Checksum 0 bits

Note 1: This register is only used for RX operations.

2: The bits in this register may only be changed while the RXEN bit (ETHCON1<8>) = 0 or the PMMODE bit (ETHRXFC<11:8>) = 0.

REGISTER 24-10: ETHPMO: ETHERNET CONTROLLER PATTERN MATCH OFFSET REGISTER

Bit Range	Bit 31/23/15/7	Bit 30/22/14/6	Bit 29/21/13/5	Bit 28/20/12/4	Bit 27/19/11/3	Bit 26/18/10/2	Bit 25/17/9/1	Bit 24/16/8/0
31:24	U-0	U-0	U-0	U-0	U-0	U-0	U-0	U-0
	—	—	—	—	—	—	—	—
23:16	U-0	U-0	U-0	U-0	U-0	U-0	U-0	U-0
	—	—	—	—	—	—	—	—
15:8	R/W-0	R/W-0	R/W-0	R/W-0	R/W-0	R/W-0	R/W-0	R/W-0
	PMO<15:8>							
7:0	R/W-0	R/W-0	R/W-0	R/W-0	R/W-0	R/W-0	R/W-0	R/W-0
	PMO<7:0>							

Legend:			
R = Readable bit	W = Writable bit	U = Unimplemented bit, read as ‘0’	
-n = Value at POR	‘1’ = Bit is set	‘0’ = Bit is cleared	x = Bit is unknown

bit 31-16 **Unimplemented:** Read as ‘0’

bit 15-0 **PMO<15:0>:** Pattern Match Offset 1 bits

Note 1: This register is only used for RX operations.

2: The bits in this register may only be changed while the RXEN bit (ETHCON1<8>) = 0 or the PMMODE bit (ETHRXFC<11:8>) = 0.

REGISTER 24-11: ETHRXFC: ETHERNET CONTROLLER RECEIVE FILTER CONFIGURATION REGISTER

Bit Range	Bit 31/23/15/7	Bit 30/22/14/6	Bit 29/21/13/5	Bit 28/20/12/4	Bit 27/19/11/3	Bit 26/18/10/2	Bit 25/17/9/1	Bit 24/16/8/0
31:24	U-0	U-0	U-0	U-0	U-0	U-0	U-0	U-0
	—	—	—	—	—	—	—	—
23:16	U-0	U-0	U-0	U-0	U-0	U-0	U-0	U-0
	—	—	—	—	—	—	—	—
15:8	R/W-0	R/W-0	U-0	R/W-0	R/W-0	R/W-0	R/W-0	R/W-0
	HTEN	MPEN	—	NOTPM	PMMODE<3:0>			
7:0	R/W-0	R/W-0	R/W-0	R/W-0	R/W-0	R/W-0	R/W-0	R/W-0
	CRCERREN	CRCOKEN	RUNTERREN	RUNTEN	UCEN	NOTMEEN	MCEN	BCEN

Legend:			
R = Readable bit	W = Writable bit	U = Unimplemented bit, read as ‘0’	
-n = Value at POR	‘1’ = Bit is set	‘0’ = Bit is cleared	x = Bit is unknown

bit 31-16 **Unimplemented:** Read as ‘0’

bit 15 **HTEN:** Enable Hash Table Filtering bit
1 = Enable Hash Table Filtering
0 = Disable Hash Table Filtering

bit 14 **MPEN:** Magic Packet™ Enable bit
1 = Enable Magic Packet Filtering
0 = Disable Magic Packet Filtering

bit 13 **Unimplemented:** Read as ‘0’

bit 12 **NOTPM:** Pattern Match Inversion bit
1 = The Pattern Match Checksum must not match for a successful Pattern Match to occur
0 = The Pattern Match Checksum must match for a successful Pattern Match to occur
This bit determines whether Pattern Match Checksum must match in order for a successful Pattern Match to occur.

bit 11-8 **PMMODE<3:0>:** Pattern Match Mode bits
1001 = Pattern match is successful if (NOTPM = 1 XOR Pattern Match Checksum matches) AND (Packet = Magic Packet)(1,3)
1000 = Pattern match is successful if (NOTPM = 1 XOR Pattern Match Checksum matches) AND (Hash Table Filter match)(1,2)
0111 = Pattern match is successful if (NOTPM = 1 XOR Pattern Match Checksum matches) AND (Destination Address = Broadcast Address)(1)
0110 = Pattern match is successful if (NOTPM = 1 XOR Pattern Match Checksum matches) AND (Destination Address = Broadcast Address)(1)
0101 = Pattern match is successful if (NOTPM = 1 XOR Pattern Match Checksum matches) AND (Destination Address = Unicast Address)(1)
0100 = Pattern match is successful if (NOTPM = 1 XOR Pattern Match Checksum matches) AND (Destination Address = Unicast Address)(1)
0011 = Pattern match is successful if (NOTPM = 1 XOR Pattern Match Checksum matches) AND (Destination Address = Station Address)(1)
0010 = Pattern match is successful if (NOTPM = 1 XOR Pattern Match Checksum matches) AND (Destination Address = Station Address)(1)
0001 = Pattern match is successful if (NOTPM = 1 XOR Pattern Match Checksum matches)(1)
0000 = Pattern Match is disabled; pattern match is always unsuccessful

Note 1: XOR = True when either one or the other conditions are true, but not both.
2: This Hash Table Filter match is active regardless of the value of the HTEN bit.
3: This Magic Packet Filter match is active regardless of the value of the MPEN bit.

Note 1: This register is only used for RX operations.
2: The bits in this register may only be changed while the RXEN bit (ETHCON1<8>) = 0.

© 2009-2013 Microchip Technology Inc.

REGISTER 24-11: ETHRXFC: ETHERNET CONTROLLER RECEIVE FILTER CONFIGURATION REGISTER (CONTINUED)

bit 7 **CRCERREN:** CRC Error Collection Enable bit
1 = The received packet CRC must be invalid for the packet to be accepted
0 = Disable CRC Error Collection filtering
This bit allows the user to collect all packets that have an invalid CRC.

bit 6 **CRCOKEN:** CRC OK Enable bit
1 = The received packet CRC must be valid for the packet to be accepted
0 = Disable CRC filtering
This bit allows the user to reject all packets that have an invalid CRC.

bit 5 **RUNTERREN:** Runt Error Collection Enable bit
1 = The received packet must be a runt packet for the packet to be accepted
0 = Disable Runt Error Collection filtering

This bit allows the user to collect all packets that are runt packets. For this filter, a runt packet is defined as any packet with a size of less than 64 bytes (when CRCOKEN = 0) or any packet with a size of less than 64 bytes that has a valid CRC (when CRCOKEN = 1).

bit 4 **RUNTEN:** Runt Enable bit
1 = The received packet must not be a runt packet for the packet to be accepted
0 = Disable Runt filtering

This bit allows the user to reject all runt packets. For this filter, a runt packet is defined as any packet with a size of less than 64 bytes.

bit 3 **UCEN:** Unicast Enable bit
1 = Enable Unicast Filtering
0 = Disable Unicast Filtering

This bit allows the user to accept all unicast packets whose Destination Address matches the Station Address.

bit 2 **NOTMEEN:** Not Me Unicast Enable bit
1 = Enable Not Me Unicast Filtering
0 = Disable Not Me Unicast Filtering

This bit allows the user to accept all unicast packets whose Destination Address does not match the Station Address.

bit 1 **MCEN:** Multicast Enable bit
1 = Enable Multicast Filtering
0 = Disable Multicast Filtering

This bit allows the user to accept all Multicast Address packets.

bit 0 **BCEN:** Broadcast Enable bit
1 = Enable Broadcast Filtering
0 = Disable Broadcast Filtering

This bit allows the user to accept all Broadcast Address packets.

Note 1: XOR = True when either one or the other conditions are true, but not both.
2: This Hash Table Filter match is active regardless of the value of the HTEN bit.
3: This Magic Packet Filter match is active regardless of the value of the MPEN bit.

Note 1: This register is only used for RX operations.
2: The bits in this register may only be changed while the RXEN bit (ETHCON1<8>) = 0.

REGISTER 24-12: ETHRXWM: ETHERNET CONTROLLER RECEIVE WATERMARKS REGISTER

Bit Range	Bit 31/23/15/7	Bit 30/22/14/6	Bit 29/21/13/5	Bit 28/20/12/4	Bit 27/19/11/3	Bit 26/18/10/2	Bit 25/17/9/1	Bit 24/16/8/0
31:24	U-0	U-0	U-0	U-0	U-0	U-0	U-0	U-0
	—	—	—	—	—	—	—	—
23:16	R/W-0	R/W-0	R/W-0	R/W-0	R/W-0	R/W-0	R/W-0	R/W-0
	RXFWM<7:0>							
15:8	U-0	U-0	U-0	U-0	U-0	U-0	U-0	U-0
	—	—	—	—	—	—	—	—
7:0	R/W-0	R/W-0	R/W-0	R/W-0	R/W-0	R/W-0	R/W-0	R/W-0
	RXEWM<7:0>							

Legend:			
R = Readable bit	W = Writable bit	U = Unimplemented bit, read as ‘0’	
-n = Value at POR	‘1’ = Bit is set	‘0’ = Bit is cleared	x = Bit is unknown

bit 31-24 **Unimplemented:** Read as ‘0’

bit 23-16 **RXFWM<7:0>:** Receive Full Watermark bits

The software controlled RX Buffer Full Watermark Pointer is compared against the RX BUFCNT to determine the full watermark condition for the FWMARK interrupt and for enabling Flow Control when automatic Flow Control is enabled. The Full Watermark Pointer should always be greater than the Empty Watermark Pointer.

bit 15-8 **Unimplemented:** Read as ‘0’

bit 7-0 **RXEWM<7:0>:** Receive Empty Watermark bits

The software controlled RX Buffer Empty Watermark Pointer is compared against the RX BUFCNT to determine the empty watermark condition for the EWMARK interrupt and for disabling Flow Control when automatic Flow Control is enabled. The Empty Watermark Pointer should always be less than the Full Watermark Pointer.

Note: This register is only used for RX operations.

© 2009-2013 Microchip Technology Inc.

REGISTER 24-13: ETHIEN: ETHERNET CONTROLLER INTERRUPT ENABLE REGISTER

Bit Range	Bit 31/23/15/7	Bit 30/22/14/6	Bit 29/21/13/5	Bit 28/20/12/4	Bit 27/19/11/3	Bit 26/18/10/2	Bit 25/17/9/1	Bit 24/16/8/0
31:24	U-0	U-0	U-0	U-0	U-0	U-0	U-0	U-0
	—	—	—	—	—	—	—	—
23:16	U-0	U-0	U-0	U-0	U-0	U-0	U-0	U-0
	—	—	—	—	—	—	—	—
15:8	U-0	R/W-0	R/W-0	U-0	U-0	U-0	R/W-0	R/W-0
	—	TXBUSEIE(1)	RXBUSEIE(2)	—	—	—	EWMARKIE(2)	FWMARKIE(2)
7:0	R/W-0	R/W-0	R/W-0	U-0	R/W-0	R/W-0	R/W-0	R/W-0
	RXDONEIE(2)	PKTPENDIE(2)	RXACTIE(2)	—	TXDONEIE(1)	TXABORTIE(1)	RXBUFNAIE(2)	RXOVFLWIE(2)

Legend:			
R = Readable bit	W = Writable bit	U = Unimplemented bit, read as ‘0’	
-n = Value at POR	‘1’ = Bit is set	‘0’ = Bit is cleared	x = Bit is unknown

bit 31-15 **Unimplemented:** Read as ‘0’

bit 14 **TXBUSEIE:** Transmit BVCI Bus Error Interrupt Enable bit(1)
1 = Enable TXBUS Error Interrupt
0 = Disable TXBUS Error Interrupt

bit 13 **RXBUSEIE:** Receive BVCI Bus Error Interrupt Enable bit(2)
1 = Enable RXBUS Error Interrupt
0 = Disable RXBUS Error Interrupt

bit 12-10 **Unimplemented:** Read as ‘0’

bit 9 **EWMARKIE:** Empty Watermark Interrupt Enable bit(2)
1 = Enable EWMARK Interrupt
0 = Disable EWMARK Interrupt

bit 8 **FWMARKIE:** Full Watermark Interrupt Enable bit(2)
1 = Enable FWMARK Interrupt
0 = Disable FWMARK Interrupt

bit 7 **RXDONEIE:** Receiver Done Interrupt Enable bit(2)
1 = Enable RXDONE Interrupt
0 = Disable RXDONE Interrupt

bit 6 **PKTPENDIE:** Packet Pending Interrupt Enable bit(2)
1 = Enable PKTPEND Interrupt
0 = Disable PKTPEND Interrupt

bit 5 **RXACTIE:** RX Activity Interrupt Enable bit
1 = Enable RXACT Interrupt
0 = Disable RXACT Interrupt

bit 4 **Unimplemented:** Read as ‘0’

bit 3 **TXDONEIE:** Transmitter Done Interrupt Enable bit(1)
1 = Enable TXDONE Interrupt
0 = Disable TXDONE Interrupt

bit 2 **TXABORTIE:** Transmitter Abort Interrupt Enable bit(1)
1 = Enable TXABORT Interrupt
0 = Disable TXABORT Interrupt

bit 1 **RXBUFNAIE:** Receive Buffer Not Available Interrupt Enable bit(2)
1 = Enable RXBUFNA Interrupt
0 = Disable RXBUFNA Interrupt

bit 0 **RXOVFLWIE:** Receive FIFO Overflow Interrupt Enable bit(2)
1 = Enable RXOVFLW Interrupt
0 = Disable RXOVFLW Interrupt

Note 1: This bit is only used for TX operations.
2: This bit is only used for RX operations.

REGISTER 24-14: ETHIRQ: ETHERNET CONTROLLER INTERRUPT REQUEST REGISTER

Bit Range	Bit 31/23/15/7	Bit 30/22/14/6	Bit 29/21/13/5	Bit 28/20/12/4	Bit 27/19/11/3	Bit 26/18/10/2	Bit 25/17/9/1	Bit 24/16/8/0
31:24	U-0	U-0	U-0	U-0	U-0	U-0	U-0	U-0
	—	—	—	—	—	—	—	—
23:16	U-0	U-0	U-0	U-0	U-0	U-0	U-0	U-0
	—	—	—	—	—	—	—	—
15:8	U-0	R/W-0	R/W-0	U-0	U-0	U-0	R/W-0	R/W-0
	—	TXBUSE	RXBUSE	—	—	—	EWMARK	FWMARK
7:0	R/W-0	R/W-0	R/W-0	U-0	R/W-0	R/W-0	R/W-0	R/W-0
	RXDONE	PKTPEND	RXACT	—	TXDONE	TXABORT	RXBUFNA	RXOVFLW

Legend:			
R = Readable bit	W = Writable bit	U = Unimplemented bit, read as ‘0’	
-n = Value at POR	‘1’ = Bit is set	‘0’ = Bit is cleared	x = Bit is unknown

bit 31-15 **Unimplemented:** Read as ‘0’

bit 14 **TXBUSE:** Transmit BVCI Bus Error Interrupt bit

1 = BVCI Bus Error has occurred
0 = BVCI Bus Error has not occurred

This bit is set when the TX DMA encounters a BVCI Bus error during a memory access. It is cleared by either a Reset or CPU write of a ‘1’ to the CLR register.

bit 13 **RXBUSE:** Receive BVCI Bus Error Interrupt bit

1 = BVCI Bus Error has occurred
0 = BVCI Bus Error has not occurred

This bit is set when the RX DMA encounters a BVCI Bus error during a memory access. It is cleared by either a Reset or CPU write of a ‘1’ to the CLR register.

bit 12-10 **Unimplemented:** Read as ‘0’

bit 9 **EWMARK:** Empty Watermark Interrupt bit

1 = Empty Watermark pointer reached
0 = No interrupt pending

This bit is set when the RX Descriptor Buffer Count is less than or equal to the value in the RXEWM bit (ETHRXWM<0:7>) value. It is cleared by BUFCNT bit (ETHSTAT<16:23>) being incremented by hardware. Writing a ‘0’ or a ‘1’ has no effect.

bit 8 **FWMARK:** Full Watermark Interrupt bit

1 = Full Watermark pointer reached
0 = No interrupt pending

This bit is set when the RX Descriptor Buffer Count is greater than or equal to the value in the RXFWM bit (ETHRXWM<16:23>) field. It is cleared by writing the BUFCDEC (ETHCON1<0>) bit to decrement the BUFCNT counter. Writing a ‘0’ or a ‘1’ has no effect.

bit 7 **RXDONE:** Receive Done Interrupt bit

1 = RX packet was successfully received
0 = No interrupt pending

This bit is set whenever an RX packet is successfully received. It is cleared by either a Reset or CPU write of a ‘1’ to the CLR register.

Note: It is recommended to use the SET, CLR, or INV registers to set or clear any bit in this register. Setting or clearing any bits in this register should only be done for debug/test purposes.

© 2009-2013 Microchip Technology Inc.

REGISTER 24-14: ETHIRQ: ETHERNET CONTROLLER INTERRUPT REQUEST REGISTER

bit 6 **PKTPEND:** Packet Pending Interrupt bit

1 = RX packet pending in memory
0 = RX packet is not pending in memory

This bit is set when the BUFCNT counter has a value other than '0'. It is cleared by either a Reset or by writing the BUFCDEC bit to decrement the BUFCNT counter. Writing a '0' or a '1' has no effect.

bit 5 **RXACT:** Receive Activity Interrupt bit

1 = RX packet data was successfully received
0 = No interrupt pending

This bit is set whenever RX packet data is stored in the RXBM FIFO. It is cleared by either a Reset or CPU write of a '1' to the CLR register.

bit 4 **Unimplemented:** Read as '0'

bit 3 **TXDONE:** Transmit Done Interrupt bit

1 = TX packet was successfully sent
0 = No interrupt pending

This bit is set when the currently transmitted TX packet completes transmission, and the Transmit Status Vector is loaded into the first descriptor used for the packet. It is cleared by either a Reset or CPU write of a '1' to the CLR register.

bit 2 **TXABORT:** Transmit Abort Condition Interrupt bit

1 = TX abort condition occurred on the last TX packet
0 = No interrupt pending

This bit is set when the MAC aborts the transmission of a TX packet for one of the following reasons:

- Jumbo TX packet abort
- Underrun abort
- Excessive defer abort
- Late collision abort
- Excessive collisions abort

This bit is cleared by either a Reset or CPU write of a '1' to the CLR register.

bit 1 **RXBUFNA:** Receive Buffer Not Available Interrupt bit

1 = RX Buffer Descriptor Not Available condition has occurred
0 = No interrupt pending

This bit is set by a RX Buffer Descriptor Overrun condition. It is cleared by either a Reset or a CPU write of a '1' to the CLR register.

bit 0 **RXOVFLW:** Receive FIFO Over Flow Error bit

1 = RX FIFO Overflow Error condition has occurred
0 = No interrupt pending

RXOVFLW is set by the RXBM Logic for an RX FIFO Overflow condition. It is cleared by either a Reset or CPU write of a '1' to the CLR register.

Note:	It is recommended to use the SET, CLR, or INV registers to set or clear any bit in this register. Setting or clearing any bits in this register should only be done for debug/test purposes.

REGISTER 24-15: ETHSTAT: ETHERNET CONTROLLER STATUS REGISTER

Bit Range	Bit 31/23/15/7	Bit 30/22/14/6	Bit 29/21/13/5	Bit 28/20/12/4	Bit 27/19/11/3	Bit 26/18/10/2	Bit 25/17/9/1	Bit 24/16/8/0
31:24	U-0	U-0	U-0	U-0	U-0	U-0	U-0	U-0
	—	—	—	—	—	—	—	—
23:16	R/W-0	R/W-0	R/W-0	R/W-0	R/W-0	R/W-0	R/W-0	R/W-0
	BUFCNT<7:0>							
15:8	U-0	U-0	U-0	U-0	U-0	U-0	U-0	U-0
	—	—	—	—	—	—	—	—
7:0	R/W-0	R/W-0	R/W-0	U-0	U-0	U-0	U-0	U-0
	ETHBUSY(1)	TXBUSY(2)	RXBUSY(2)	—	—	—	—	—

Legend:			
R = Readable bit	W = Writable bit	U = Unimplemented bit, read as ‘0’	
-n = Value at POR	‘1’ = Bit is set	‘0’ = Bit is cleared	x = Bit is unknown

bit 31-24 **Unimplemented:** Read as ‘0’

bit 23-16 **BUFCNT<7:0>:** Packet Buffer Count bits

Number of packet buffers received in memory. Once a packet has been successfully received, this register is incremented by hardware based on the number of descriptors used by the packet. Software decrements the counter (by writing to the BUFCDEC bit (ETHCON1<0>) for each descriptor used) after a packet has been read out of the buffer. The register does not roll over (0xFF to 0x00) when hardware tries to increment the register and the register is already at 0xFF. Conversely, the register does not roll under (0x00 to 0xFF) when software tries to decrement the register and the register is already at 0x0000. When software attempts to decrement the counter at the same time that the hardware attempts to increment the counter, the counter value will remain unchanged.

When this register value reaches 0xFF, the RX logic will halt (only if automatic Flow Control is enabled) awaiting software to write the BUFCDEC bit in order to decrement the register below 0xFF.

If automatic Flow Control is disabled, the RXDMA will continue processing and the BUFCNT will saturate at a value of 0xFF.

When this register is non-zero, the PKTPEND status bit will be set and an interrupt may be generated, depending on the value of the ETHIEN bit <PKTPENDIE> register.

When the ETHRXST register is written, the BUFCNT counter is automatically cleared to 0x00.

Note: BUFCNT will not be cleared when ON is set to ‘0’. This enables software to continue to utilize and decrement this count.

bit 15-8 **Unimplemented:** Read as ‘0’

bit 7 **ETHBUSY:** Ethernet Module busy bit(1)

1 = Ethernet logic has been turned on (ON (ETHCON1<15>) = 1) or is completing a transaction
0 = Ethernet logic is idle

This bit indicates that the module has been turned on or is completing a transaction after being turned off.

bit 6 **TXBUSY:** Transmit Busy bit(2)

1 = TX logic is receiving data
0 = TX logic is idle

This bit indicates that a packet is currently being transmitted. A change in this status bit is not necessarily reflected by the TXDONE interrupt, as TX packets may be aborted or rejected by the MAC.

Note 1: This bit will be *set* when the ON bit (ETHCON1<15>) = 1.
2: This bit will be *cleared* when the ON bit (ETHCON1<15>) = 0.

© 2009-2013 Microchip Technology Inc.

REGISTER 24-15: ETHSTAT: ETHERNET CONTROLLER STATUS REGISTER (CONTINUED)

bit 5 **RXBUSY:** Receive Busy bit(2)

1 = RX logic is receiving data
0 = RX logic is idle

This bit indicates that a packet is currently being received. A change in this status bit is not necessarily reflected by the RXDONE interrupt, as RX packets may be aborted or rejected by the RX filter.

bit 4-0 **Unimplemented:** Read as '0'

Note 1: This bit will be *set* when the ON bit (ETHCON1<15>) = 1.
2: This bit will be *cleared* when the ON bit (ETHCON1<15>) = 0.

REGISTER 24-16: ETHRXOVFLOW: ETHERNET CONTROLLER RECEIVE OVERFLOW STATISTICS REGISTER

Bit Range	Bit 31/23/15/7	Bit 30/22/14/6	Bit 29/21/13/5	Bit 28/20/12/4	Bit 27/19/11/3	Bit 26/18/10/2	Bit 25/17/9/1	Bit 24/16/8/0
31:24	U-0	U-0	U-0	U-0	U-0	U-0	U-0	U-0
	—	—	—	—	—	—	—	—
23:16	U-0	U-0	U-0	U-0	U-0	U-0	U-0	U-0
	—	—	—	—	—	—	—	—
15:8	R/W-0	R/W-0	R/W-0	R/W-0	R/W-0	R/W-0	R/W-0	R/W-0
	RXOVFLWCNT<15:8>							
7:0	R/W-0	R/W-0	R/W-0	R/W-0	R/W-0	R/W-0	R/W-0	R/W-0
	RXOVFLWCNT<7:0>							

Legend:			
R = Readable bit	W = Writable bit	U = Unimplemented bit, read as ‘0’	
-n = Value at POR	‘1’ = Bit is set	‘0’ = Bit is cleared	x = Bit is unknown

bit 31-16 **Unimplemented:** Read as ‘0’

bit 15-0 **RXOVFLWCNT<15:0>:** Dropped Receive Frames Count bits

Increment counter for frames accepted by the RX filter and subsequently dropped due to internal receive error (RXFIFO overrun). This event also sets the RXOVFLW bit (ETHIRQ<0>) interrupt flag.

Note 1: This register is only used for RX operations.

2: This register is automatically cleared by hardware after a read operation, unless the byte enables for bytes 0/1 are ‘0’.

3: It is recommended to use the SET, CLR, or INV registers to set or clear any bit in this register. Setting or clearing any bits in this register should only be done for debug/test purposes.

© 2009-2013 Microchip Technology Inc.

REGISTER 24-17: ETHFRMTXOK: ETHERNET CONTROLLER FRAMES TRANSMITTED OK STATISTICS REGISTER

Bit Range	Bit 31/23/15/7	Bit 30/22/14/6	Bit 29/21/13/5	Bit 28/20/12/4	Bit 27/19/11/3	Bit 26/18/10/2	Bit 25/17/9/1	Bit 24/16/8/0
31:24	U-0	U-0	U-0	U-0	U-0	U-0	U-0	U-0
	—	—	—	—	—	—	—	—
23:16	U-0	U-0	U-0	U-0	U-0	U-0	U-0	U-0
	—	—	—	—	—	—	—	—
15:8	R/W-0	R/W-0	R/W-0	R/W-0	R/W-0	R/W-0	R/W-0	R/W-0
	FRMTXOKCNT<15:8>							
7:0	R/W-0	R/W-0	R/W-0	R/W-0	R/W-0	R/W-0	R/W-0	R/W-0
	FRMTXOKCNT<7:0>							

Legend:			
R = Readable bit	W = Writable bit	U = Unimplemented bit, read as ‘0’	
-n = Value at POR	‘1’ = Bit is set	‘0’ = Bit is cleared	x = Bit is unknown

bit 31-16 **Unimplemented:** Read as ‘0’

bit 15-0 **FRMTXOKCNT<15:0>:** Frame Transmitted OK Count bits
Increment counter for frames successfully transmitted.

Note 1: This register is only used for TX operations.

2: This register is automatically cleared by hardware after a read operation, unless the byte enables for bytes 0/1 are ‘0’.

3: It is recommended to use the SET, CLR, or INV registers to set or clear any bit in this register. Setting or clearing any bits in this register should only be done for debug/test purposes.

REGISTER 24-18: ETHSCOLFRM: ETHERNET CONTROLLER SINGLE COLLISION FRAMES STATISTICS REGISTER

Bit Range	Bit 31/23/15/7	Bit 30/22/14/6	Bit 29/21/13/5	Bit 28/20/12/4	Bit 27/19/11/3	Bit 26/18/10/2	Bit 25/17/9/1	Bit 24/16/8/0
31:24	U-0	U-0	U-0	U-0	U-0	U-0	U-0	U-0
	—	—	—	—	—	—	—	—
23:16	U-0	U-0	U-0	U-0	U-0	U-0	U-0	U-0
	—	—	—	—	—	—	—	—
15:8	R/W-0	R/W-0	R/W-0	R/W-0	R/W-0	R/W-0	R/W-0	R/W-0
	SCOLFRMCNT<15:8>							
7:0	R/W-0	R/W-0	R/W-0	R/W-0	R/W-0	R/W-0	R/W-0	R/W-0
	SCOLFRMCNT<7:0>							

Legend:			
R = Readable bit	W = Writable bit	U = Unimplemented bit, read as ‘0’	
-n = Value at POR	‘1’ = Bit is set	‘0’ = Bit is cleared	x = Bit is unknown

bit 31-16 **Unimplemented:** Read as ‘0’

bit 15-0 **SCOLFRMCNT<15:0>:** Single Collision Frame Count bits
Increment count for frames that were successfully transmitted on the second try.

Note 1: This register is only used for TX operations.

2: This register is automatically cleared by hardware after a read operation, unless the byte enables for bytes 0/1 are ‘0’.

3: It is recommended to use the SET, CLR, or INV registers to set or clear any bit in this register. Setting or clearing any bits in this register should only be done for debug/test purposes.

© 2009-2013 Microchip Technology Inc.

REGISTER 24-19: ETHMCOLFRM: ETHERNET CONTROLLER MULTIPLE COLLISION FRAMES STATISTICS REGISTER

Bit Range	Bit 31/23/15/7	Bit 30/22/14/6	Bit 29/21/13/5	Bit 28/20/12/4	Bit 27/19/11/3	Bit 26/18/10/2	Bit 25/17/9/1	Bit 24/16/8/0
31:24	U-0	U-0	U-0	U-0	U-0	U-0	U-0	U-0
	—	—	—	—	—	—	—	—
23:16	U-0	U-0	U-0	U-0	U-0	U-0	U-0	U-0
	—	—	—	—	—	—	—	—
15:8	R/W-0	R/W-0	R/W-0	R/W-0	R/W-0	R/W-0	R/W-0	R/W-0
	MCOLFRMCNT<15:8>							
7:0	R/W-0	R/W-0	R/W-0	R/W-0	R/W-0	R/W-0	R/W-0	R/W-0
	MCOLFRMCNT<7:0>							

Legend:			
R = Readable bit	W = Writable bit	U = Unimplemented bit, read as ‘0’	
-n = Value at POR	‘1’ = Bit is set	‘0’ = Bit is cleared	x = Bit is unknown

bit 31-16 **Unimplemented:** Read as ‘0’

bit 15-0 **MCOLFRMCNT<15:0>:** Multiple Collision Frame Count bits
Increment count for frames that were successfully transmitted after there was more than one collision.

Note 1: This register is only used for TX operations.

2: This register is automatically cleared by hardware after a read operation, unless the byte enables for bytes 0/1 are ‘0’.

3: It is recommended to use the SET, CLR, or INV registers to set or clear any bit in this register. Setting or clearing any bits in this register should only be done for debug/test purposes.

REGISTER 24-20: ETHFRMRXOK: ETHERNET CONTROLLER FRAMES RECEIVED OK STATISTICS REGISTER

Bit Range	Bit 31/23/15/7	Bit 30/22/14/6	Bit 29/21/13/5	Bit 28/20/12/4	Bit 27/19/11/3	Bit 26/18/10/2	Bit 25/17/9/1	Bit 24/16/8/0
31:24	U-0	U-0	U-0	U-0	U-0	U-0	U-0	U-0
	—	—	—	—	—	—	—	—
23:16	U-0	U-0	U-0	U-0	U-0	U-0	U-0	U-0
	—	—	—	—	—	—	—	—
15:8	R/W-0	R/W-0	R/W-0	R/W-0	R/W-0	R/W-0	R/W-0	R/W-0
	FRMRXOKCNT<15:8>							
7:0	R/W-0	R/W-0	R/W-0	R/W-0	R/W-0	R/W-0	R/W-0	R/W-0
	FRMRXOKCNT<7:0>							

Legend:			
R = Readable bit	W = Writable bit	U = Unimplemented bit, read as ‘0’	
-n = Value at POR	‘1’ = Bit is set	‘0’ = Bit is cleared	x = Bit is unknown

bit 31-16 **Unimplemented:** Read as ‘0’

bit 15-0 **FRMRXOKCNT<15:0>:** Frames Received OK Count bits

Increment count for frames received successfully by the RX Filter. This count will not be incremented if there is a Frame Check Sequence (FCS) or Alignment error.

Note 1: This register is only used for RX operations.

2: This register is automatically cleared by hardware after a read operation, unless the byte enables for bytes 0/1 are ‘0’.

3: It is recommended to use the SET, CLR, or INV registers to set or clear any bit in this register. Setting or clearing any bits in this register should only be done for debug/test purposes.

© 2009-2013 Microchip Technology Inc.

REGISTER 24-21: ETHFCSERR: ETHERNET CONTROLLER FRAME CHECK SEQUENCE ERROR STATISTICS REGISTER

Bit Range	Bit 31/23/15/7	Bit 30/22/14/6	Bit 29/21/13/5	Bit 28/20/12/4	Bit 27/19/11/3	Bit 26/18/10/2	Bit 25/17/9/1	Bit 24/16/8/0
31:24	U-0	U-0	U-0	U-0	U-0	U-0	U-0	U-0
	—	—	—	—	—	—	—	—
23:16	U-0	U-0	U-0	U-0	U-0	U-0	U-0	U-0
	—	—	—	—	—	—	—	—
15:8	R/W-0	R/W-0	R/W-0	R/W-0	R/W-0	R/W-0	R/W-0	R/W-0
	FCSERRCNT<15:8>							
7:0	R/W-0	R/W-0	R/W-0	R/W-0	R/W-0	R/W-0	R/W-0	R/W-0
	FCSERRCNT<7:0>							

Legend:			
R = Readable bit	W = Writable bit	U = Unimplemented bit, read as ‘0’	
-n = Value at POR	‘1’ = Bit is set	‘0’ = Bit is cleared	x = Bit is unknown

bit 31-16 **Unimplemented:** Read as ‘0’

bit 15-0 **FCSERRCNT<15:0>:** FCS Error Count bits

Increment count for frames received with FCS error and the frame length in bits is an integral multiple of 8 bits.

Note 1: This register is only used for RX operations.

2: This register is automatically cleared by hardware after a read operation, unless the byte enables for bytes 0/1 are ‘0’.

3: It is recommended to use the SET, CLR, or INV registers to set or clear any bit in this register. Setting or clearing any bits in this register should be only done for debug/test purposes.

REGISTER 24-22: ETHALGNERR: ETHERNET CONTROLLER ALIGNMENT ERRORS STATISTICS REGISTER

Bit Range	Bit 31/23/15/7	Bit 30/22/14/6	Bit 29/21/13/5	Bit 28/20/12/4	Bit 27/19/11/3	Bit 26/18/10/2	Bit 25/17/9/1	Bit 24/16/8/0
31:24	U-0	U-0	U-0	U-0	U-0	U-0	U-0	U-0
	—	—	—	—	—	—	—	—
23:16	U-0	U-0	U-0	U-0	U-0	U-0	U-0	U-0
	—	—	—	—	—	—	—	—
15:8	R/W-0	R/W-0	R/W-0	R/W-0	R/W-0	R/W-0	R/W-0	R/W-0
	ALGNERRCNT<15:8>							
7:0	R/W-0	R/W-0	R/W-0	R/W-0	R/W-0	R/W-0	R/W-0	R/W-0
	ALGNERRCNT<7:0>							

Legend:			
R = Readable bit	W = Writable bit	U = Unimplemented bit, read as ‘0’	
-n = Value at POR	‘1’ = Bit is set	‘0’ = Bit is cleared	x = Bit is unknown

bit 31-16 **Unimplemented:** Read as ‘0’

bit 15-0 **ALGNERRCNT<15:0>:** Alignment Error Count bits

Increment count for frames with alignment errors. Note that an alignment error is a frame that has an FCS error and the frame length in bits is not an integral multiple of 8 bits (a.k.a., dribble nibble)

Note 1: This register is only used for RX operations.

2: This register is automatically cleared by hardware after a read operation, unless the byte enables for bytes 0/1 are ‘0’.

3: It is recommended to use the SET, CLR, or INV registers to set or clear any bit in this register. Setting or clearing any bits in this register should be only done for debug/test purposes.

© 2009-2013 Microchip Technology Inc.

REGISTER 24-23: EMAC1CFG1: ETHERNET CONTROLLER MAC CONFIGURATION 1 REGISTER

Bit Range	Bit 31/23/15/7	Bit 30/22/14/6	Bit 29/21/13/5	Bit 28/20/12/4	Bit 27/19/11/3	Bit 26/18/10/2	Bit 25/17/9/1	Bit 24/16/8/0
31:24	U-0	U-0	U-0	U-0	U-0	U-0	U-0	U-0
	—	—	—	—	—	—	—	—
23:16	U-0	U-0	U-0	U-0	U-0	U-0	U-0	U-0
	—	—	—	—	—	—	—	—
15:8	R/W-1	R/W-0	U-0	U-0	R/W-0	R/W-0	R/W-0	R/W-0
	SOFT RESET	SIM RESET	—	—	RESET RMCS	RESET RFUN	RESET TMCS	RESET TFUN
7:0	U-0	U-0	U-0	R/W-0	R/W-1	R/W-1	R/W-0	R/W-1
	—	—	—	LOOPBACK	TX PAUSE	RX PAUSE	PASSALL	RX ENABLE

Legend:			
R = Readable bit	W = Writable bit	U = Unimplemented bit, read as ‘0’	
-n = Value at POR	‘1’ = Bit is set	‘0’ = Bit is cleared	x = Bit is unknown

bit 31-16 **Unimplemented:** Read as ‘0’

bit 15 **SOFTRESET:** Soft Reset bit
Setting this bit will put the MACMII in reset. Its default value is ‘1’.

bit 14 **SIMRESET:** Simulation Reset bit
Setting this bit will cause a reset to the random number generator within the Transmit Function.

bit 13-12 **Unimplemented:** Read as ‘0’

bit 11 **RESETRMCS:** Reset MCS/RX bit
Setting this bit will put the MAC Control Sub-layer/Receive domain logic in reset.

bit 10 **RESETRFUN:** Reset RX Function bit
Setting this bit will put the MAC Receive function logic in reset.

bit 9 **RESETTMCS:** Reset MCS/TX bit
Setting this bit will put the MAC Control Sub-layer/TX domain logic in reset.

bit 8 **RESETTFUN:** Reset TX Function bit
Setting this bit will put the MAC Transmit function logic in reset.

bit 7-5 **Unimplemented:** Read as ‘0’

bit 4 **LOOPBACK:** MAC Loopback mode bit
1 = MAC Transmit interface is loop backed to the MAC Receive interface
0 = MAC normal operation

bit 3 **TXPAUSE:** MAC TX Flow Control bit
1 = PAUSE Flow Control frames are allowed to be transmitted
0 = PAUSE Flow Control frames are blocked

bit 2 **RXPAUSE:** MAC RX Flow Control bit
1 = The MAC acts upon received PAUSE Flow Control frames
0 = Received PAUSE Flow Control frames are ignored

bit 1 **PASSALL:** MAC Pass all Receive Frames bit
1 = The MAC will accept all frames regardless of type (Normal vs. Control)
0 = The received Control frames are ignored

bit 0 **RXENABLE:** MAC Receive Enable bit
1 = Enable the MAC receiving of frames
0 = Disable the MAC receiving of frames

Note: Both 16-bit and 32-bit accesses are allowed to these registers (including the SET, CLR and INV registers). 8-bit accesses are not allowed and are ignored by the hardware.

REGISTER 24-24: EMAC1CFG2: ETHERNET CONTROLLER MAC CONFIGURATION 2 REGISTER

Bit Range	Bit 31/23/15/7	Bit 30/22/14/6	Bit 29/21/13/5	Bit 28/20/12/4	Bit 27/19/11/3	Bit 26/18/10/2	Bit 25/17/9/1	Bit 25/16/8/0
31:24	U-0	U-0	U-0	U-0	U-0	U-0	U-0	U-0
	—	—	—	—	—	—	—	—
23:16	U-0	U-0	U-0	U-0	U-0	U-0	U-0	U-0
	—	—	—	—	—	—	—	—
15:8	U-0	R/W-1	R/W-0	R/W-0	U-0	U-0	R/W-0	R/W-0
	—	EXCESS DFR	BPNOBK OFF	NOBK OFF	—	—	LONGPRE	PUREPRE
7:0	R/W-1	R/W-0	R/W-1	R/W-1	R/W-0	R/W-0	R/W-1	R/W-0
	AUTO PAD(1,2)	VLAN PAD(1,2)	PAD ENABLE(1,3)	CRC ENABLE	DELAYCRC	HUGEFRM	LENGTHCK	FULLDPLX

Legend:			
R = Readable bit	W = Writable bit	U = Unimplemented bit, read as ‘0’	
-n = Value at POR	‘1’ = Bit is set	‘0’ = Bit is cleared	x = Bit is unknown

bit 31-15 **Unimplemented:** Read as ‘0’

bit 14 **EXCESSDER:** Excess Defer bit

1 = The MAC will defer to carrier indefinitely as per the Standard
0 = The MAC will abort when the excessive deferral limit is reached

bit 13 **BPNOBKOFF:** Backpressure/No Backoff bit

1 = The MAC after incidentally causing a collision during backpressure will immediately retransmit without backoff reducing the chance of further collisions and ensuring transmit packets get sent
0 = The MAC will not remove the backoff

bit 12 **NOBKOFF:** No Backoff bit

1 = Following a collision, the MAC will immediately retransmit rather than using the Binary Exponential Back-off algorithm as specified in the Standard
0 = Following a collision, the MAC will use the Binary Exponential Backoff algorithm

bit 11-10 **Unimplemented:** Read as ‘0’

bit 9 **LONGPRE:** Long Preamble Enforcement bit

1 = The MAC only allows receive packets which contain preamble fields less than 12 bytes in length
0 = The MAC allows any length preamble as per the Standard

bit 8 **PUREPRE:** Pure Preamble Enforcement bit

1 = The MAC will verify the content of the preamble to ensure it contains 0x55 and is error-free. A packet with errors in its preamble is discarded
0 = The MAC does not perform any preamble checking

bit 7 **AUTOPAD:** Automatic Detect Pad Enable bit(1,2)

1 = The MAC will automatically detect the type of frame, either tagged or untagged, by comparing the two octets following the source address with 0x8100 (VLAN Protocol ID) and pad accordingly
0 = The MAC does not perform automatic detection

Note 1: Table 24-5 provides a description of the pad function based on the configuration of this register.
2: This bit is ignored if the PADENABLE bit is cleared.
3: This bit is used in conjunction with the AUTOPAD and VLANPAD bits.

Note: Both 16-bit and 32-bit accesses are allowed to these registers (including the SET, CLR and INV registers). 8-bit accesses are not allowed and are ignored by the hardware

© 2009-2013 Microchip Technology Inc.

REGISTER 24-24: EMAC1CFG2: ETHERNET CONTROLLER MAC CONFIGURATION 2 REGISTER

bit 6 **VLANPAD:** VLAN Pad Enable bit(1,2)

1 = The MAC will pad all short frames to 64 bytes and append a valid CRC
0 = The MAC does not perform padding of short frames

bit 5 **PADENABLE:** Pad/CRC Enable bit(1,3)

1 = The MAC will pad all short frames
0 = The frames presented to the MAC have a valid length

bit 4 **CRCENABLE:** CRC Enable1 bit

1 = The MAC will append a CRC to every frame whether padding was required or not. Must be set if the PADENABLE bit is set.
0 = The frames presented to the MAC have a valid CRC

bit 3 **DELAYCRC:** Delayed CRC bit

This bit determines the number of bytes, if any, of proprietary header information that exist on the front of the IEEE 802.3 frames.

1 = Four bytes of header (ignored by the CRC function)
0 = No proprietary header

bit 2 **HUGEFRM:** Huge Frame enable bit

1 = Frames of any length are transmitted and received
0 = Huge frames are not allowed for receive or transmit

bit 1 **LENGTHCK:** Frame Length checking bit

1 = Both transmit and receive frame lengths are compared to the Length/Type field. If the Length/Type field represents a length then the check is performed. Mismatches are reported on the transmit/receive statistics vector.
0 = Length/Type field check is not performed

bit 0 **FULLDPLX:** Full-Duplex Operation bit

1 = The MAC operates in Full-Duplex mode
0 = The MAC operates in Half-Duplex mode

Note 1: Table 24-5 provides a description of the pad function based on the configuration of this register.
2: This bit is ignored if the PADENABLE bit is cleared.
3: This bit is used in conjunction with the AUTOPAD and VLANPAD bits.

Note: Both 16-bit and 32-bit accesses are allowed to these registers (including the SET, CLR and INV registers). 8-bit accesses are not allowed and are ignored by the hardware

TABLE 24-5: PAD OPERATION

Type	AUTOPAD	VLANPAD	PADENABLE	Action
Any	x	x	0	No pad, check CRC
Any	0	0	1	Pad to 60 Bytes, append CRC
Any	x	1	1	Pad to 64 Bytes, append CRC
Any	1	0	1	If untagged: Pad to 60 Bytes, append CRC If VLAN tagged: Pad to 64 Bytes, append CRC

REGISTER 24-25: EMAC1IPGT: ETHERNET CONTROLLER MAC BACK-TO-BACK INTERPACKET GAP REGISTER

Bit Range	Bit 31/23/15/7	Bit 30/22/14/6	Bit 29/21/13/5	Bit 28/20/12/4	Bit 27/19/11/3	Bit 26/18/10/2	Bit 25/17/9/1	Bit 24/16/8/0
31:24	U-0	U-0	U-0	U-0	U-0	U-0	U-0	U-0
	—	—	—	—	—	—	—	—
23:16	U-0	U-0	U-0	U-0	U-0	U-0	U-0	U-0
	—	—	—	—	—	—	—	—
15:8	U-0	U-0	U-0	U-0	U-0	U-0	U-0	U-0
	—	—	—	—	—	—	—	—
7:0	U-0	R/W-0	R/W-0	R/W-1	R/W-0	R/W-0	R/W-1	R/W-0
	—	B2BIPKTGP<6:0>						

Legend:			
R = Readable bit	W = Writable bit	U = Unimplemented bit, read as ‘0’	
-n = Value at POR	‘1’ = Bit is set	‘0’ = Bit is cleared	x = Bit is unknown

bit 31-7 **Unimplemented:** Read as ‘0’

bit 6-0 **B2BIPKTGP<6:0>:** Back-to-Back Interpacket Gap bits

This is a programmable field representing the nibble time offset of the minimum possible period between the end of any transmitted packet, to the beginning of the next. In Full-Duplex mode, the register value should be the desired period in nibble times minus 3. In Half-Duplex mode, the register value should be the desired period in nibble times minus 6. In Full-Duplex the recommended setting is 0x15 (21d), which represents the minimum IPG of 0.96 µs (in 100 Mbps) or 9.6 µs (in 10 Mbps). In Half-Duplex mode, the recommended setting is 0x12 (18d), which also represents the minimum IPG of 0.96 µs (in 100 Mbps) or 9.6 µs (in 10 Mbps).

Note: Both 16-bit and 32-bit accesses are allowed to these registers (including the SET, CLR and INV registers). 8-bit accesses are not allowed and are ignored by the hardware.

© 2009-2013 Microchip Technology Inc.

REGISTER 24-26: EMAC1IPGR: ETHERNET CONTROLLER MAC NON-BACK-TO-BACK INTERPACKET GAP REGISTER

Bit Range	Bit 31/23/15/7	Bit 30/22/14/6	Bit 29/21/13/5	Bit 28/20/12/4	Bit 27/19/11/3	Bit 26/18/10/2	Bit 25/17/9/1	Bit 24/16/8/0
31:24	U-0	U-0	U-0	U-0	U-0	U-0	U-0	U-0
	—	—	—	—	—	—	—	—
23:16	U-0	U-0	U-0	U-0	U-0	U-0	U-0	U-0
	—	—	—	—	—	—	—	—
15:8	U-0	R/W-0	R/W-0	R/W-0	R/W-1	R/W-1	R/W-0	R/W-0
	—	NB2BIPKTGP1<6:0>						
7:0	U-0	R/W-0	R/W-0	R/W-1	R/W-0	R/W-0	R/W-1	R/W-0
	—	NB2BIPKTGP2<6:0>						

Legend:			
R = Readable bit	W = Writable bit	U = Unimplemented bit, read as ‘0’	
-n = Value at POR	‘1’ = Bit is set	‘0’ = Bit is cleared	x = Bit is unknown

bit 31-15 **Unimplemented:** Read as ‘0’

bit 14-8 **NB2BIPKTGP1<6:0>:** Non-Back-to-Back Interpacket Gap Part 1 bits

This is a programmable field representing the optional carrierSense window referenced in section 4.2.3.2.1 “Deference” of the IEEE 80.23 Specification. If the carrier is detected during the timing of IPGR1, the MAC defers to the carrier. If, however, the carrier comes after IPGR1, the MAC continues timing IPGR2 and transmits, knowingly causing a collision, thus ensuring fair access to the medium. Its range of values is 0x0 to IPGR2. Its recommend value is 0xC (12d).

bit 7 **Unimplemented:** Read as ‘0’

bit 6-0 **NB2BIPKTGP2<6:0>:** Non-Back-to-Back Interpacket Gap Part 2 bits

This is a programmable field representing the non-back-to-back Inter-Packet-Gap. Its recommended value is 0x12 (18d), which represents the minimum IPG of 0.96 µs (in 100 Mbps) or 9.6 µs (in 10 Mbps).

Note: Both 16-bit and 32-bit accesses are allowed to these registers (including the SET, CLR and INV registers). 8-bit accesses are not allowed and are ignored by the hardware.

REGISTER 24-27: EMAC1CLRT: ETHERNET CONTROLLER MAC COLLISION WINDOW/RETRY LIMIT REGISTER

Bit Range	Bit 31/23/15/7	Bit 30/22/14/6	Bit 29/21/13/5	Bit 28/20/12/4	Bit 27/19/11/3	Bit 26/18/10/2	Bit 25/17/9/1	Bit 24/16/8/0
31:24	U-0	U-0	U-0	U-0	U-0	U-0	U-0	U-0
	—	—	—	—	—	—	—	—
23:16	U-0	U-0	U-0	U-0	U-0	U-0	U-0	U-0
	—	—	—	—	—	—	—	—
15:8	U-0	U-0	R/W-1	R/W-1	R/W-0	R/W-1	R/W-1	R/W-1
	—	—	CWINDOW<5:0>					
7:0	U-0	U-0	U-0	U-0	R/W-1	R/W-1	R/W-1	R/W-1
	—	—	—	—	RETX<3:0>			

Legend:			
R = Readable bit	W = Writable bit	U = Unimplemented bit, read as ‘0’	
-n = Value at POR	‘1’ = Bit is set	‘0’ = Bit is cleared	x = Bit is unknown

bit 31-14 **Unimplemented:** Read as ‘0’

bit 13-8 **CWINDOW<5:0>:** Collision Window bits

This is a programmable field representing the slot time or collision window during which collisions occur in properly configured networks. Since the collision window starts at the beginning of transmission, the preamble and SFD is included. Its default of 0x37 (55d) corresponds to the count of frame bytes at the end of the window.

bit 7-4 **Unimplemented:** Read as ‘0’

bit 3-0 **RETX<3:0>:** Retransmission Maximum bits

This is a programmable field specifying the number of retransmission attempts following a collision before aborting the packet due to excessive collisions. The Standard specifies the maximum number of attempts (attemptLimit) to be 0xF (15d). Its default is ‘0xF’.

Note: Both 16-bit and 32-bit accesses are allowed to these registers (including the SET, CLR and INV registers). 8-bit accesses are not allowed and are ignored by the hardware.

© 2009-2013 Microchip Technology Inc.

REGISTER 24-28: EMAC1MAXF: ETHERNET CONTROLLER MAC MAXIMUM FRAME LENGTH REGISTER

Bit Range	Bit 31/23/15/7	Bit 30/22/14/6	Bit 29/21/13/5	Bit 28/20/12/4	Bit 27/19/11/3	Bit 26/18/10/2	Bit 25/17/9/1	Bit 24/16/8/0
31:24	U-0	U-0	U-0	U-0	U-0	U-0	U-0	U-0
	—	—	—	—	—	—	—	—
23:16	U-0	U-0	U-0	U-0	U-0	U-0	U-0	U-0
	—	—	—	—	—	—	—	—
15:8	R/W-0	R/W-0	R/W-0	R/W-0	R/W-0	R/W-1	R/W-0	R/W-1
	MACMAXF<15:8>(1)							
7:0	R/W-1	R/W-1	R/W-1	R/W-0	R/W-1	R/W-1	R/W-1	R/W-0
	MACMAXF<7:0>(1)							

Legend:			
R = Readable bit	W = Writable bit	U = Unimplemented bit, read as ‘0’	
-n = Value at POR	‘1’ = Bit is set	‘0’ = Bit is cleared	x = Bit is unknown

bit 31-16 **Unimplemented:** Read as ‘0’

bit 15-0 **MACMAXF<15:0>:** Maximum Frame Length bits(1)

These bits reset to 0x05EE, which represents a maximum receive frame of 1518 octets. An untagged maximum size Ethernet frame is 1518 octets. A tagged frame adds four octets for a total of 1522 octets. If a shorter/longer maximum length restriction is desired, program this 16-bit field.

Note 1: If a proprietary header is allowed, this bit should be adjusted accordingly. For example, if 4-byte headers are prepended to frames, MACMAXF could be set to 1527 octets. This would allow the maximum VLAN tagged frame plus the 4-byte header.

Note: Both 16-bit and 32-bit accesses are allowed to these registers (including the SET, CLR and INV registers). 8-bit accesses are not allowed and are ignored by the hardware.

REGISTER 24-29: EMAC1SUPP: ETHERNET CONTROLLER MAC PHY SUPPORT REGISTER

Bit Range	Bit 31/23/15/7	Bit 30/22/14/6	Bit 29/21/13/5	Bit 28/20/12/4	Bit 27/19/11/3	Bit 26/18/10/2	Bit 25/17/9/1	Bit 24/16/8/0
31:24	U-0	U-0	U-0	U-0	U-0	U-0	U-0	U-0
	—	—	—	—	—	—	—	—
23:16	U-0	U-0	U-0	U-0	U-0	U-0	U-0	U-0
	—	—	—	—	—	—	—	—
15:8	U-0	U-0	U-0	U-0	R/W-0	U-0	U-0	R/W-0
	—	—	—	—	RESETRMII(1)	—	—	SPEEDRMII(1)
7:0	U-0	U-0	U-0	U-0	U-0	U-0	U-0	U-0
	—	—	—	—	—	—	—	—

Legend:			
R = Readable bit	W = Writable bit	U = Unimplemented bit, read as ‘0’	
-n = Value at POR	‘1’ = Bit is set	‘0’ = Bit is cleared	x = Bit is unknown

bit 31-12 **Unimplemented:** Read as ‘0’

bit 11 **RESETRMII:** Reset RMII Logic bit(1)
1 = Reset the MAC RMII module
0 = Normal operation.

bit 10-9 **Unimplemented:** Read as ‘0’

bit 8 **SPEEDRMII:** RMII Speed bit(1)
This bit configures the Reduced MII logic for the current operating speed.
1 = RMII is running at 100 Mbps
0 = RMII is running at 10 Mbps

bit 7-0 **Unimplemented:** Read as ‘0’

Note 1: This bit is only used for the RMII module.

Note: Both 16-bit and 32-bit accesses are allowed to these registers (including the SET, CLR and INV registers). 8-bit accesses are not allowed and are ignored by the hardware.

© 2009-2013 Microchip Technology Inc.

REGISTER 24-30: EMAC1TEST: ETHERNET CONTROLLER MAC TEST REGISTER

Bit Range	Bit 31/23/15/7	Bit 30/22/14/6	Bit 29/21/13/5	Bit 28/20/12/4	Bit 27/19/11/3	Bit 26/18/10/2	Bit 25/17/9/1	Bit 24/16/8/0
31:24	U-0	U-0	U-0	U-0	U-0	U-0	U-0	U-0
	—	—	—	—	—	—	—	—
23:16	U-0	U-0	U-0	U-0	U-0	U-0	U-0	U-0
	—	—	—	—	—	—	—	—
15:8	U-0	U-0	U-0	U-0	U-0	U-0	U-0	U-0
	—	—	—	—	—	—	—	—
7:0	U-0	U-0	U-0	U-0	U-0	R/W-0	R/W-0	R/W-0
	—	—	—	—	—	TESTBP	TESTPAUSE(1)	SHRTQNTA(1)

Legend:			
R = Readable bit	W = Writable bit	U = Unimplemented bit, read as ‘0’	
-n = Value at POR	‘1’ = Bit is set	‘0’ = Bit is cleared	x = Bit is unknown

bit 31-3 **Unimplemented:** Read as ‘0’

bit 2 **TESTBP:** Test Backpressure bit

1 = The MAC will assert backpressure on the link. Backpressure causes preamble to be transmitted, raising carrier sense. A transmit packet from the system will be sent during backpressure.

0 = Normal operation

bit 1 **TESTPAUSE:** Test PAUSE bit(1)

1 = The MAC Control sub-layer will inhibit transmissions, just as if a PAUSE Receive Control frame with a non-zero pause time parameter was received

0 = Normal operation

bit 0 **SHRTQNTA:** Shortcut PAUSE Quanta bit(1)

1 = The MAC reduces the effective PAUSE Quanta from 64 byte-times to 1 byte-time

0 = Normal operation

Note 1: This bit is only for testing purposes.

Note: Both 16-bit and 32-bit accesses are allowed to these registers (including the SET, CLR and INV registers). 8-bit accesses are not allowed and are ignored by the hardware.

REGISTER 24-31: EMAC1MCFG: ETHERNET CONTROLLER MAC MII MANAGEMENT CONFIGURATION REGISTER

Bit Range	Bit 31/23/15/7	Bit 30/22/14/6	Bit 29/21/13/5	Bit 28/20/12/4	Bit 27/19/11/3	Bit 26/18/10/2	Bit 25/17/9/1	Bit 24/16/8/0
31:24	U-0	U-0	U-0	U-0	U-0	U-0	U-0	U-0
	—	—	—	—	—	—	—	—
23:16	U-0	U-0	U-0	U-0	U-0	U-0	U-0	U-0
	—	—	—	—	—	—	—	—
15:8	R/W-0	U-0	U-0	U-0	U-0	U-0	U-0	U-0
	RESETMGMT	—	—	—	—	—	—	—
7:0	U-0	U-0	R/W-1	R/W-0	R/W-0	R/W-0	R/W-0	R/W-0
	—	—	CLKSEL<3:0>(1)				NOPRE	SCANINC

Legend:			
R = Readable bit	W = Writable bit	U = Unimplemented bit, read as ‘0’	
-n = Value at POR	‘1’ = Bit is set	‘0’ = Bit is cleared	x = Bit is unknown

bit 31-16 **Unimplemented:** Read as ‘0’

bit 15 **RESETMGMT:** Test Reset MII Management bit
1 = Reset the MII Management module
0 = Normal Operation

bit 14-6 **Unimplemented:** Read as ‘0’

bit 5-2 **CLKSEL<3:0>:** MII Management Clock Select 1 bits(1)
These bits are used by the clock divide logic in creating the MII Management Clock (MDC), which the IEEE 802.3 Specification defines to be no faster than 2.5 MHz. Some PHYs support clock rates up to 12.5 MHz.

bit 1 **NOPRE:** Suppress Preamble bit
1 = The MII Management will perform read/write cycles without the 32-bit preamble field. Some PHYs support suppressed preamble
0 = Normal read/write cycles are performed

bit 0 **SCANINC:** Scan Increment bit
1 = The MII Management module will perform read cycles across a range of PHYs. The read cycles will start from address 1 through the value set in EMAC1MADR<PHYADDR>
0 = Continuous reads of the same PHY

Note 1: Table 24-6 provides a description of the clock divider encoding.

Note: Both 16-bit and 32-bit accesses are allowed to these registers (including the SET, CLR and INV registers). 8-bit accesses are not allowed and are ignored by the hardware.

TABLE 24-6: MIIM CLOCK SELECTION

MIIM Clock Select	EMAC1MCFG<5:2>
SYSCLK divided by 4	000x
SYSCLK divided by 6	0010
SYSCLK divided by 8	0011
SYSCLK divided by 10	0100
SYSCLK divided by 14	0101
SYSCLK divided by 20	0110
SYSCLK divided by 28	0111
SYSCLK divided by 40	1000
Undefined	Any other combination

© 2009-2013 Microchip Technology Inc.

REGISTER 24-32: EMAC1MCMD: ETHERNET CONTROLLER MAC MII MANAGEMENT COMMAND REGISTER

Bit Range	Bit 31/23/15/7	Bit 30/22/14/6	Bit 29/21/13/5	Bit 28/20/12/4	Bit 27/19/11/3	Bit 26/18/10/2	Bit 25/17/9/1	Bit 24/16/8/0
31:24	U-0	U-0	U-0	U-0	U-0	U-0	U-0	U-0
	—	—	—	—	—	—	—	—
23:16	U-0	U-0	U-0	U-0	U-0	U-0	U-0	U-0
	—	—	—	—	—	—	—	—
15:8	U-0	U-0	U-0	U-0	U-0	U-0	U-0	U-0
	—	—	—	—	—	—	—	—
7:0	U-0	U-0	U-0	U-0	U-0	U-0	R/W-0	R/W-0
	—	—	—	—	—	—	SCAN	READ

Legend:			
R = Readable bit	W = Writable bit	U = Unimplemented bit, read as ‘0’	
-n = Value at POR	‘1’ = Bit is set	‘0’ = Bit is cleared	x = Bit is unknown

bit 31-2 **Unimplemented:** Read as ‘0’

bit 1 **SCAN:** MII Management Scan Mode bit

1 = The MII Management module will perform read cycles continuously (for example, useful for monitoring the Link Fail)

0 = Normal Operation

bit 0 **READ:** MII Management Read Command bit

1 = The MII Management module will perform a single read cycle. The read data is returned in the EMAC1MRDD register

0 = The MII Management module will perform a write cycle. The write data is taken from the EMAC1MWTD register

Note: Both 16-bit and 32-bit accesses are allowed to these registers (including the SET, CLR and INV registers). 8-bit accesses are not allowed and are ignored by the hardware.

REGISTER 24-33: EMAC1MADR: ETHERNET CONTROLLER MAC MII MANAGEMENT ADDRESS REGISTER

Bit Range	Bit 31/23/15/7	Bit 30/22/14/6	Bit 29/21/13/5	Bit 28/20/12/4	Bit 27/19/11/3	Bit 26/18/10/2	Bit 25/17/9/1	Bit 24/16/8/0
31:24	U-0	U-0	U-0	U-0	U-0	U-0	U-0	U-0
	—	—	—	—	—	—	—	—
23:16	U-0	U-0	U-0	U-0	U-0	U-0	U-0	U-0
	—	—	—	—	—	—	—	—
15:8	U-0	U-0	U-0	R/W-0	R/W-0	R/W-0	R/W-0	R/W-1
	—	—	—	PHYADDR<4:0>				
7:0	U-0	U-0	U-0	R/W-0	R/W-0	R/W-0	R/W-0	R/W-0
	—	—	—	REGADDR<4:0>				

Legend:			
R = Readable bit	W = Writable bit	U = Unimplemented bit, read as ‘0’	
-n = Value at POR	‘1’ = Bit is set	‘0’ = Bit is cleared	x = Bit is unknown

bit 31-13 **Unimplemented:** Read as ’0’

bit 12-8 **PHYADDR<4:0>:** MII Management PHY Address bits

This field represents the 5-bit PHY Address field of Management cycles. Up to 31 PHYs can be addressed (0 is reserved).

bit 7-5 **Unimplemented:** Read as ’0’

bit 4-0 **REGADDR<4:0>:** MII Management Register Address bits

This field represents the 5-bit Register Address field of Management cycles. Up to 32 registers can be accessed.

Note: Both 16-bit and 32-bit accesses are allowed to these registers (including the SET, CLR and INV registers). 8-bit accesses are not allowed and are ignored by the hardware.

© 2009-2013 Microchip Technology Inc.

REGISTER 24-34: EMAC1MWTD: ETHERNET CONTROLLER MAC MII MANAGEMENT WRITE DATA REGISTER

Bit Range	Bit 31/23/15/7	Bit 30/22/14/6	Bit 29/21/13/5	Bit 28/20/12/4	Bit 27/19/11/3	Bit 26/18/10/2	Bit 25/17/9/1	Bit 24/16/8/0
31:24	U-0	U-0	U-0	U-0	U-0	U-0	U-0	U-0
	—	—	—	—	—	—	—	—
23:16	U-0	U-0	U-0	U-0	U-0	U-0	U-0	U-0
	—	—	—	—	—	—	—	—
15:8	R/W-0	R/W-0	R/W-0	R/W-0	R/W-0	R/W-0	R/W-0	R/W-0
	MWTD<15:8>							
7:0	R/W-0	R/W-0	R/W-0	R/W-0	R/W-0	R/W-0	R/W-0	R/W-0
	MWTD<7:0>							

Legend:			
R = Readable bit	W = Writable bit	U = Unimplemented bit, read as ‘0’	
-n = Value at POR	‘1’ = Bit is set	‘0’ = Bit is cleared	x = Bit is unknown

bit 31-16 **Unimplemented:** Read as ‘0’

bit 15-0 **MWTD<15:0>:** MII Management Write Data bits

When written, a MII Management write cycle is performed using the 16-bit data and the pre-configured PHY and Register addresses from the EMAC1MADR register.

Note: Both 16-bit and 32-bit accesses are allowed to these registers (including the SET, CLR and INV registers). 8-bit accesses are not allowed and are ignored by the hardware.

REGISTER 24-35: EMAC1MRDD: ETHERNET CONTROLLER MAC MII MANAGEMENT READ DATA REGISTER

Bit Range	Bit 31/23/15/7	Bit 30/22/14/6	Bit 29/21/13/5	Bit 28/20/12/4	Bit 27/19/11/3	Bit 26/18/10/2	Bit 25/17/9/1	Bit 24/16/8/0
31:24	U-0	U-0	U-0	U-0	U-0	U-0	U-0	U-0
	—	—	—	—	—	—	—	—
23:16	U-0	U-0	U-0	U-0	U-0	U-0	U-0	U-0
	—	—	—	—	—	—	—	—
15:8	R/W-0	R/W-0	R/W-0	R/W-0	R/W-0	R/W-0	R/W-0	R/W-0
	MRDD<15:8>							
7:0	R/W-0	R/W-0	R/W-0	R/W-0	R/W-0	R/W-0	R/W-0	R/W-0
	MRDD<7:0>							

Legend:			
R = Readable bit	W = Writable bit	U = Unimplemented bit, read as ‘0’	
-n = Value at POR	‘1’ = Bit is set	‘0’ = Bit is cleared	x = Bit is unknown

bit 31-16 **Unimplemented:** Read as ‘0’

bit 15-0 **MRDD<15:0>:** MII Management Read Data bits

Following a MII Management Read Cycle, the 16-bit data can be read from this location.

Note: Both 16-bit and 32-bit accesses are allowed to these registers (including the SET, CLR and INV registers). 8-bit accesses are not allowed and are ignored by the hardware.

REGISTER 24-36: EMAC1MIND: ETHERNET CONTROLLER MAC MII MANAGEMENT INDICATORS REGISTER

Bit Range	Bit 31/23/15/7	Bit 30/22/14/6	Bit 29/21/13/5	Bit 28/20/12/4	Bit 27/19/11/3	Bit 26/18/10/2	Bit 25/17/9/1	Bit 24/16/8/0
31:24	U-0	U-0	U-0	U-0	U-0	U-0	U-0	U-0
	—	—	—	—	—	—	—	—
23:16	U-0	U-0	U-0	U-0	U-0	U-0	U-0	U-0
	—	—	—	—	—	—	—	—
15:8	U-0	U-0	U-0	U-0	U-0	U-0	U-0	U-0
	—	—	—	—	—	—	—	—
7:0	U-0	U-0	U-0	U-0	R/W-0	R/W-0	R/W-0	R/W-0
	—	—	—	—	LINKFAIL	NOTVALID	SCAN	MIIMBUSY

Legend:			
R = Readable bit	W = Writable bit	U = Unimplemented bit, read as ‘0’	
-n = Value at POR	‘1’ = Bit is set	‘0’ = Bit is cleared	x = Bit is unknown

bit 31-4 **Unimplemented:** Read as ‘0’

bit 3 **LINKFAIL:** Link Fail bit

When ‘1’ is returned - indicates link fail has occurred. This bit reflects the value last read from the PHY status register.

bit 2 **NOTVALID:** MII Management Read Data Not Valid bit

When ‘1’ is returned - indicates an MII management read cycle has not completed and the Read Data is not yet valid.

bit 1 **SCAN:** MII Management Scanning bit

When ‘1’ is returned - indicates a scan operation (continuous MII Management Read cycles) is in progress.

bit 0 **MIIMBUSY:** MII Management Busy bit

When ‘1’ is returned - indicates MII Management module is currently performing an MII Management Read or Write cycle.

Note: Both 16-bit and 32-bit accesses are allowed to these registers (including the SET, CLR and INV registers). 8-bit accesses are not allowed and are ignored by the hardware.

© 2009-2013 Microchip Technology Inc.

REGISTER 24-37: EMAC1SA0: ETHERNET CONTROLLER MAC STATION ADDRESS 0 REGISTER

Bit Range	Bit 31/23/15/7	Bit 30/22/14/6	Bit 29/21/13/5	Bit 28/20/12/4	Bit 27/19/11/3	Bit 26/18/10/2	Bit 25/17/9/1	Bit 24/16/8/0
31:24	U-0	U-0	U-0	U-0	U-0	U-0	U-0	U-0
	—	—	—	—	—	—	—	—
23:16	U-0	U-0	U-0	U-0	U-0	U-0	U-0	U-0
	—	—	—	—	—	—	—	—
15:8	R/W-P	R/W-P	R/W-P	R/W-P	R/W-P	R/W-P	R/W-P	R/W-P
	STNADDR6<7:0>							
7:0	R/W-P	R/W-P	R/W-P	R/W-P	R/W-P	R/W-P	R/W-P	R/W-P
	STNADDR5<7:0>							

Legend:		P = Programmable bit	
R = Readable bit	W = Writable bit	U = Unimplemented bit, read as ‘0’	
-n = Value at POR	‘1’ = Bit is set	‘0’ = Bit is cleared	x = Bit is unknown

bit 31-16 **Unimplemented:** Read as ‘0’

bit 15-8 **STNADDR6<7:0>:** Station Address Octet 6 bits
These bits hold the sixth transmitted octet of the station address.

bit 7-0 **STNADDR5<7:0>:** Station Address Octet 5 bits
These bits hold the fifth transmitted octet of the station address.

Note 1: Both 16-bit and 32-bit accesses are allowed to these registers (including the SET, CLR and INV registers). 8-bit accesses are not allowed and are ignored by the hardware.

2: This register is loaded at reset from the factory preprogrammed station address.

REGISTER 24-38: EMAC1SA1: ETHERNET CONTROLLER MAC STATION ADDRESS 1 REGISTER

Bit Range	Bit 31/23/15/7	Bit 30/22/14/6	Bit 29/21/13/5	Bit 28/20/12/4	Bit 27/19/11/3	Bit 26/18/10/2	Bit 25/17/9/1	Bit 24/16/8/0
31:24	U-0	U-0	U-0	U-0	U-0	U-0	U-0	U-0
	—	—	—	—	—	—	—	—
23:16	U-0	U-0	U-0	U-0	U-0	U-0	U-0	U-0
	—	—	—	—	—	—	—	—
15:8	R/W-P	R/W-P	R/W-P	R/W-P	R/W-P	R/W-P	R/W-P	R/W-P
	STNADDR4<7:0>							
7:0	R/W-P	R/W-P	R/W-P	R/W-P	R/W-P	R/W-P	R/W-P	R/W-P
	STNADDR3<7:0>							

Legend:		P = Programmable bit	
R = Readable bit	W = Writable bit	U = Unimplemented bit, read as ‘0’	
-n = Value at POR	‘1’ = Bit is set	‘0’ = Bit is cleared	x = Bit is unknown

bit 31-16 **Unimplemented:** Read as ‘0’

bit 15-8 **STNADDR4<7:0>:** Station Address Octet 4 bits
These bits hold the fourth transmitted octet of the station address.

bit 7-0 **STNADDR3<7:0>:** Station Address Octet 3 bits
These bits hold the third transmitted octet of the station address.

Note 1: Both 16-bit and 32-bit accesses are allowed to these registers (including the SET, CLR and INV registers). 8-bit accesses are not allowed and are ignored by the hardware.

2: This register is loaded at reset from the factory preprogrammed station address.

© 2009-2013 Microchip Technology Inc.

REGISTER 24-39: EMAC1SA2: ETHERNET CONTROLLER MAC STATION ADDRESS 2 REGISTER

Bit Range	Bit 31/23/15/7	Bit 30/22/14/6	Bit 29/21/13/5	Bit 28/20/12/4	Bit 27/19/11/3	Bit 26/18/10/2	Bit 25/17/9/1	Bit 24/16/8/0
31:24	U-0	U-0	U-0	U-0	U-0	U-0	U-0	U-0
	—	—	—	—	—	—	—	—
23:16	U-0	U-0	U-0	U-0	U-0	U-0	U-0	U-0
	—	—	—	—	—	—	—	—
15:8	R/W-P	R/W-P	R/W-P	R/W-P	R/W-P	R/W-P	R/W-P	R/W-P
	STNADDR2<7:0>							
7:0	R/W-P	R/W-P	R/W-P	R/W-P	R/W-P	R/W-P	R/W-P	R/W-P
	STNADDR1<7:0>							

Legend:		P = Programmable bit	
R = Readable bit	W = Writable bit	U = Unimplemented bit, read as ‘0’	
-n = Value at POR	‘1’ = Bit is set	‘0’ = Bit is cleared	x = Bit is unknown

bit 31-16 **Reserved:** Maintain as ‘0’; ignore read

bit 15-8 **STNADDR2<7:0>:** Station Address Octet 2 bits
These bits hold the second transmitted octet of the station address.

bit 7-0 **STNADDR1<7:0>:** Station Address Octet 1 bits
These bits hold the most significant (first transmitted) octet of the station address.

Note 1: Both 16-bit and 32-bit accesses are allowed to these registers (including the SET, CLR and INV registers). 8-bit accesses are not allowed and are ignored by the hardware.

2: This register is loaded at reset from the factory preprogrammed station address.

NOTES:

© 2009-2013 Microchip Technology Inc.

25.0 COMPARATOR

Note 1: This data sheet summarizes the features of the PIC32MX5XX/6XX/7XX family of devices. It is not intended to be a comprehensive reference source. To complement the information in this data sheet, refer to **Section 19. "Comparator"** (DS60001110) in the *"PIC32 Family Reference Manual"*, which is available from the Microchip web site (www.microchip.com/PIC32).

2: Some registers and associated bits described in this section may not be available on all devices. Refer to **Section 4.0 "Memory Organization"** in this data sheet for device-specific register and bit information.

The Comparator module contains two comparators that can be configured in a variety of ways.

Key features of the Comparator module include:

- Selectable inputs available include:
  - Analog inputs multiplexed with I/O pins
  - On-chip internal absolute voltage reference (IVREF)
  - Comparator voltage reference (CVREF)
- Outputs can be inverted
- Selectable interrupt generation

A block diagram of the Comparator module is illustrated in Figure 25-1.

FIGURE 25-1: COMPARATOR MODULE BLOCK DIAGRAM

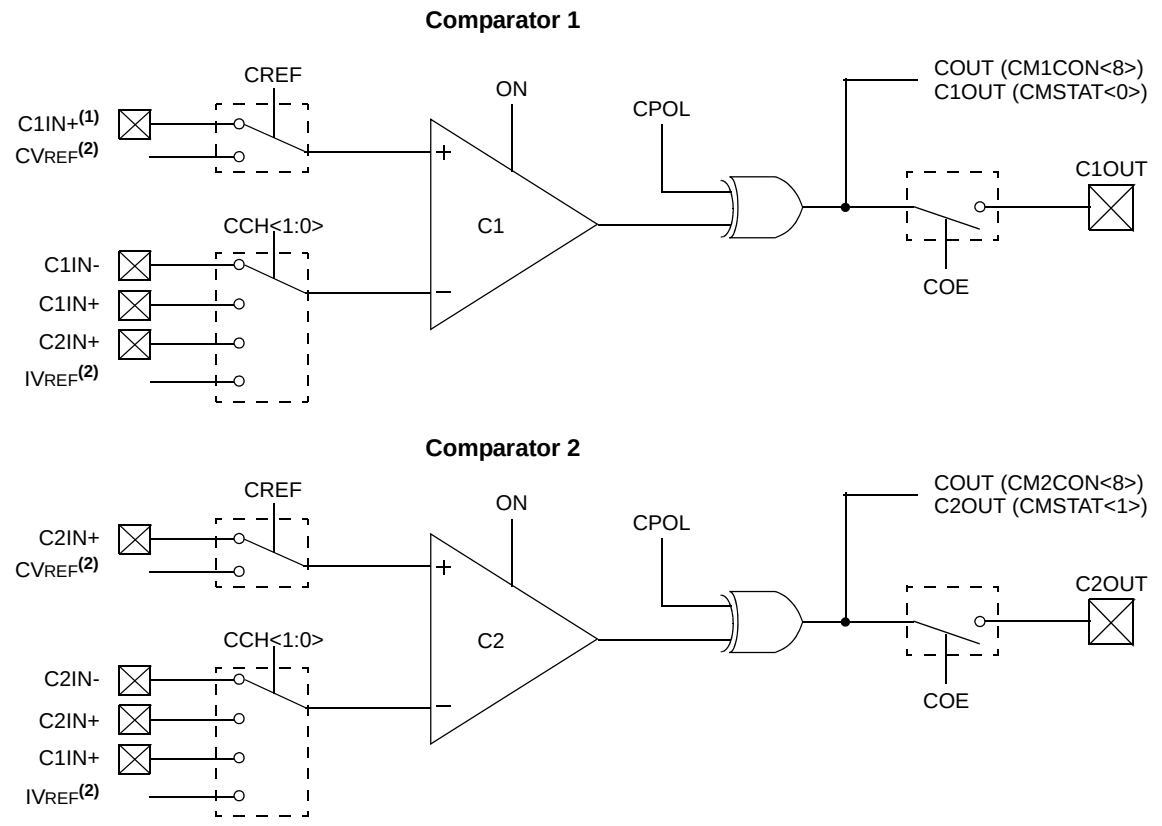

Note 1: On devices with a USB module, and when the module is enabled, this pin is controlled by the USB module, and therefore, is not available as a comparator input.

2: Internally connected. See **Section 26.0 "Comparator Voltage Reference (CVREF)"**.

25.1 Control Registers

REGISTER 25-1: CMxCON: COMPARATOR 'x' CONTROL REGISTER

Bit Range	Bit 31/23/15/7	Bit 30/22/14/6	Bit 29/21/13/5	Bit 28/20/12/4	Bit 27/19/11/3	Bit 26/18/10/2	Bit 25/17/9/1	Bit 24/16/8/0
31:24	U-0	U-0	U-0	U-0	U-0	U-0	U-0	U-0
	—	—	—	—	—	—	—	—
23:16	U-0	U-0	U-0	U-0	U-0	U-0	U-0	U-0
	—	—	—	—	—	—	—	—
15:8	R/W-0	R/W-0	R/W-0	U-0	U-0	U-0	U-0	R-0
	ON(1)	COE	CPOL(2)	—	—	—	—	COUT
7:0	R/W-1	R/W-1	U-0	R/W-0	U-0	U-0	R/W-1	R/W-1
	EVPOL<1:0>		—	CREF	—	—	CCH<1:0>	

Legend:			
R = Readable bit	W = Writable bit	U = Unimplemented bit, read as '0'	
-n = Value at POR	'1' = Bit is set	'0' = Bit is cleared	x = Bit is unknown

bit 31-16 **Unimplemented:** Read as '0'

bit 15 **ON:** Comparator ON bit(1)

Clearing this bit does not affect the other bits in this register.

1 = Module is enabled. Setting this bit does not affect the other bits in this register
0 = Module is disabled and does not consume current.

bit 14 **COE:** Comparator Output Enable bit

1 = Comparator output is driven on the output CxOUT pin
0 = Comparator output is not driven on the output CxOUT pin

bit 13 **CPOL:** Comparator Output Inversion bit(2)

1 = Output is inverted
0 = Output is not inverted

bit 12-9 **Unimplemented:** Read as '0'

bit 8 **COUT:** Comparator Output bit

1 = Output of the Comparator is a '1'
0 = Output of the Comparator is a '0'

bit 7-6 **EVPOL<1:0>:** Interrupt Event Polarity Select bits

11 = Comparator interrupt is generated on a low-to-high or high-to-low transition of the comparator output
10 = Comparator interrupt is generated on a high-to-low transition of the comparator output
01 = Comparator interrupt is generated on a low-to-high transition of the comparator output
00 = Comparator interrupt generation is disabled

bit 5 **Unimplemented:** Read as '0'

bit 4 **CREF:** Comparator Positive Input Configure bit

1 = Comparator non-inverting input is connected to the internal CVREF
0 = Comparator non-inverting input is connected to the CxIN+ pin

bit 3-2 **Unimplemented:** Read as '0'

bit 1-0 **CCH<1:0>:** Comparator Negative Input Select bits for Comparator

11 = Comparator inverting input is connected to the IVREF
10 = Comparator inverting input is connected to the C2IN+ pin for C1 and C1IN+ pin for C2
01 = Comparator inverting input is connected to the C1IN+ pin for C1 and C2IN+ pin for C2
00 = Comparator inverting input is connected to the C1IN- pin for C1 and C2IN- pin for C2

Note 1: When using the 1:1 PBCLK divisor, the user's software should not read/write the peripheral's SFRs in the SYSCLK cycle immediately following the instruction that clears the module's ON bit.

2: Setting this bit will invert the signal to the comparator interrupt generator as well. This will result in an interrupt being generated on the opposite edge from the one selected by EVPOL<1:0>.

© 2009-2013 Microchip Technology Inc.

REGISTER 25-2: CMSTAT: COMPARATOR STATUS REGISTER

Bit Range	Bit 31/23/15/7	Bit 30/22/14/6	Bit 29/21/13/5	Bit 28/20/12/4	Bit 27/19/11/3	Bit 26/18/10/2	Bit 25/17/9/1	Bit 24/16/8/0
31:24	U-0	U-0	U-0	U-0	U-0	U-0	U-0	U-0
	—	—	—	—	—	—	—	—
23:16	U-0	U-0	U-0	U-0	U-0	U-0	U-0	U-0
	—	—	—	—	—	—	—	—
15:8	U-0	U-0	R/W-0	U-0	U-0	U-0	U-0	U-0
	—	—	SIDL	—	—	—	—	—
7:0	U-0	U-0	U-0	U-0	U-0	U-0	R-0	R-0
	—	—	—	—	—	—	C2OUT	C1OUT

Legend:			
R = Readable bit	W = Writable bit	U = Unimplemented bit, read as ‘0’	
-n = Value at POR	‘1’ = Bit is set	‘0’ = Bit is cleared	x = Bit is unknown

bit 31-14 **Unimplemented:** Read as ‘0’

bit 13 **SIDL:** Stop in Idle Control bit
1 = All Comparator modules are disabled while in Idle mode
0 = All Comparator modules continue to operate while in Idle mode

bit 12-2 **Unimplemented:** Read as ‘0’

bit 1 **C2OUT:** Comparator Output bit
1 = Output of Comparator 2 is a ‘1’
0 = Output of Comparator 2 is a ‘0’

bit 0 **C1OUT:** Comparator Output bit
1 = Output of Comparator 1 is a ‘1’
0 = Output of Comparator 1 is a ‘0’

NOTES:

© 2009-2013 Microchip Technology Inc.

26.0 COMPARATOR VOLTAGE REFERENCE (CVREF)

Note 1: This data sheet summarizes the features of the PIC32MX5XX/6XX/7XX family of devices. It is not intended to be a comprehensive reference source. To complement the information in this data sheet, refer to **Section 20. "Comparator Voltage Reference (CVREF)"** (DS60001109) in the *"PIC32 Family Reference Manual"*, which is available from the Microchip web site (www.microchip.com/PIC32).

2: Some registers and associated bits described in this section may not be available on all devices. Refer to **Section 4.0 "Memory Organization"** in this data sheet for device-specific register and bit information.

The CVREF module is a 16-tap, resistor ladder network that provides a selectable reference voltage. Although its primary purpose is to provide a reference for the analog comparators, it also may be used independently of them.

A block diagram of the module is illustrated in Figure 26-1. The resistor ladder is segmented to provide two ranges of voltage reference values and has a power-down function to conserve power when the reference is not being used. The module's supply reference can be provided from either device VDD/VSS or an external voltage reference. The CVREF output is available for the comparators and typically available for pin output.

Key features of the CVREF module include:

- High and low range selection
- Sixteen output levels available for each range
- Internally connected to comparators to conserve device pins
- Output can be connected to a pin

FIGURE 26-1: COMPARATOR VOLTAGE REFERENCE MODULE BLOCK DIAGRAM

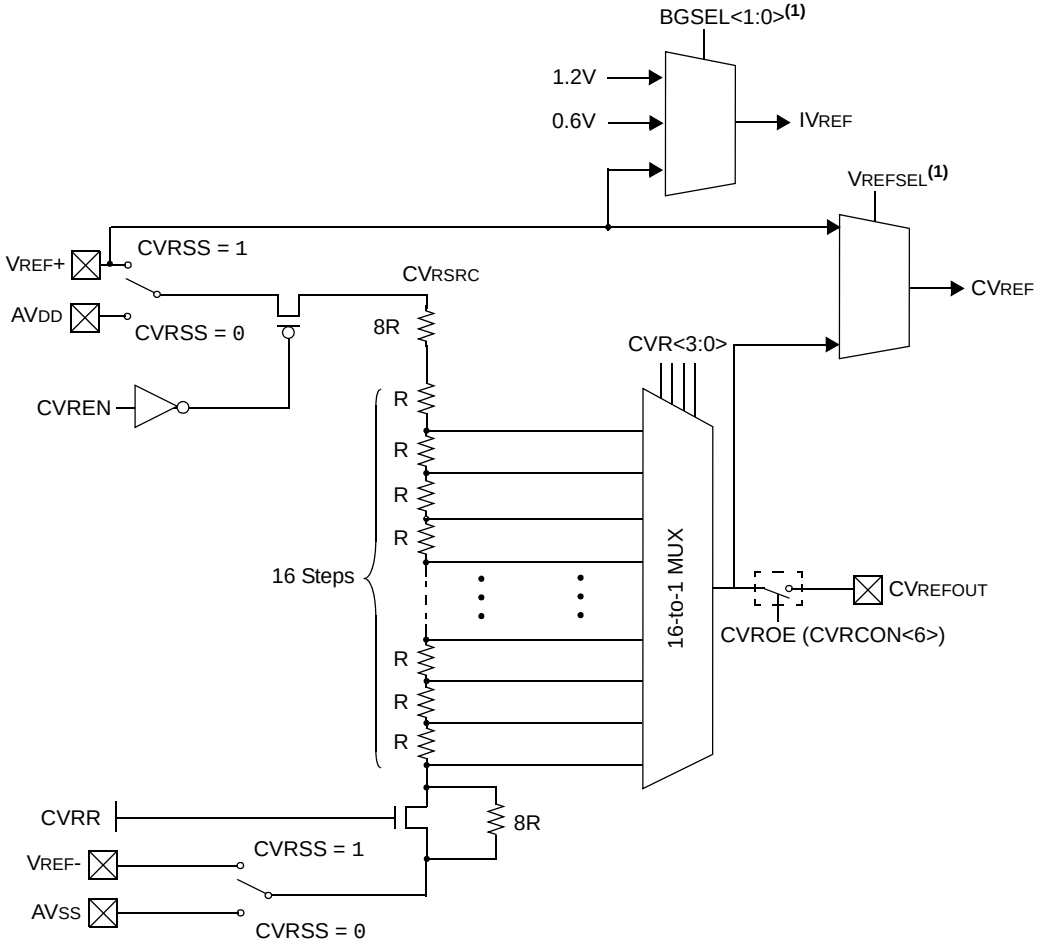

Note 1: This bit is not available on PIC32MX575/675/695/775/795 devices. On these devices CVREF is generated by the Register network and IVREF is connected to 0.6V.

26.1 Control Register

REGISTER 26-1: CVRCON: COMPARATOR VOLTAGE REFERENCE CONTROL REGISTER

Bit Range	Bit 31/23/15/7	Bit 30/22/14/6	Bit 29/21/13/5	Bit 28/20/12/4	Bit 27/19/11/3	Bit 26/18/10/2	Bit 25/17/9/1	Bit 24/16/8/0
31:24	U-0	U-0	U-0	U-0	U-0	U-0	U-0	U-0
	—	—	—	—	—	—	—	—
23:16	U-0	U-0	U-0	U-0	U-0	U-0	U-0	U-0
	—	—	—	—	—	—	—	—
15:8	R/W-0	U-0	U-0	U-0	U-0	R/W-0	R/W-0	R/W-1
	ON(1)	—	—	—	—	VREFSEL(2)	BGSEL<1:0>(2)	
7:0	U-0	R/W-0	R/W-0	R/W-0	R/W-0	R/W-0	R/W-0	R/W-0
	—	CVROE	CVRR	CVRSS	CVR<3:0>			

Legend:			
R = Readable bit	W = Writable bit	U = Unimplemented bit, read as ‘0’	
-n = Value at POR	‘1’ = Bit is set	‘0’ = Bit is cleared	x = Bit is unknown

bit 31-16 **Unimplemented:** Read as ‘0’

bit 15 **ON:** Comparator Voltage Reference On bit(1)
Setting or clearing this bit does not affect the other bits in this register.
1 = Module is enabled
0 = Module is disabled and does not consume current

bit 14-11 **Unimplemented:** Read as ‘0’

bit 10 **VREFSEL:** Voltage Reference Select bit(2)
1 = $CV_{REF} = V_{REF+}$
0 = CV_{REF} is generated by the resistor network

bit 9-8 **BGSEL<1:0>:** Band Gap Reference Source bits(2)
11 = $IV_{REF} = V_{REF+}$
10 = Reserved
01 = IV_{REF} = 0.6V (nominal, default)
00 = IV_{REF} = 1.2V (nominal)

bit 7 **Unimplemented:** Read as ‘0’

bit 6 **CVROE:** CV_{REFOUT} Enable bit
1 = Voltage level is output on CV_{REFOUT} pin
0 = Voltage level is disconnected from CV_{REFOUT} pin

bit 5 **CVRR:** CV_{REF} Range Selection bit
1 = 0 to 0.67 CV_{RSRC}, with CV_{RSRC}/24 step size
0 = 0.25 CV_{RSRC} to 0.75 CV_{RSRC}, with CV_{RSRC}/32 step size

bit 4 **CVRSS:** CV_{REF} Source Selection bit
1 = Comparator voltage reference source, $CV_{RSRC} = (V_{REF+}) – (V_{REF-})$
0 = Comparator voltage reference source, $CV_{RSRC} = AV_{DD} – AV_{SS}$

bit 3-0 **CVR<3:0>:** CV_{REF} Value Selection $0 \le CVR<3:0> \le 15$ bits
When CVRR = 1:
$CV_{REF} = (CVR<3:0>/24) \bullet (CV_{RSRC})$
When CVRR = 0:
$CV_{REF} = 1/4 \bullet (CV_{RSRC}) + (CVR<3:0>/32) \bullet (CV_{RSRC})$

Note 1: When using the 1:1 PBCLK divisor, the user’s software should not read/write the peripheral’s SFRs in the SYSCLK cycle immediately following the instruction that clears the module’s ON bit.

2: These bits are not available on PIC32MX575/675/775/795 devices. On these devices, the reset value for CVRON is ‘0000’.

© 2009-2013 Microchip Technology Inc.

27.0 POWER-SAVING FEATURES

Note 1: This data sheet summarizes the features of the PIC32MX5XX/6XX/7XX family of devices. It is not intended to be a comprehensive reference source. To complement the information in this data sheet, refer to **Section 10. "Power-Saving Features"** (DS60001130) in the *"PIC32 Family Reference Manual"*, which is available from the Microchip web site (www.microchip.com/PIC32).

2: Some registers and associated bits described in this section may not be available on all devices. Refer to **Section 4.0 "Memory Organization"** in this data sheet for device-specific register and bit information.

This section describes power-saving features for the PIC32MX5XX/6XX/7XX family of devices. These devices offer a total of nine methods and modes, organized into two categories, that allow the user to balance power consumption with device performance. In all of the methods and modes described in this section, power-saving is controlled by software.

27.1 Power-Saving with CPU Running

When the CPU is running, power consumption can be controlled by reducing the CPU clock frequency, lowering the Peripheral Bus Clock (PBCLK) and by individually disabling modules. These methods are grouped into the following categories:

- FRC Run mode: the CPU is clocked from the FRC clock source with or without postscalers.
- LPRC Run mode: the CPU is clocked from the LPRC clock source.
- SOSC Run mode: the CPU is clocked from the SOSC clock source.

In addition, the Peripheral Bus Scaling mode is available where peripherals are clocked at the programmable fraction of the CPU clock (SYSCLK).

27.2 CPU Halted Methods

The device supports two power-saving modes, Sleep and Idle, both of which Halt the clock to the CPU. These modes operate with all clock sources, as listed below:

- **POSC Idle mode:** the system clock is derived from the POSC. The system clock source continues to operate. Peripherals continue to operate, but can optionally be individually disabled.
- **FRC Idle mode:** the system clock is derived from the FRC with or without postscalers. Peripherals continue to operate, but can optionally be individually disabled.
- **SOSC Idle mode:** the system clock is derived from the SOSC. Peripherals continue to operate, but can optionally be individually disabled.
- **LPRC Idle mode:** the system clock is derived from the LPRC. Peripherals continue to operate, but can optionally be individually disabled. This is the lowest power mode for the device with a clock running.
- **Sleep mode:** the CPU, the system clock source and any peripherals that operate from the system clock source are Halted. Some peripherals can operate in Sleep using specific clock sources. This is the lowest power mode for the device.

27.3 Power-Saving Operation

Peripherals and the CPU can be halted or disabled to further reduce power consumption.

27.3.1 SLEEP MODE

Sleep mode has the lowest power consumption of the device power-saving operating modes. The CPU and most peripherals are halted. Select peripherals can continue to operate in Sleep mode and can be used to wake the device from Sleep. See the individual peripheral module sections for descriptions of behavior in Sleep.

Sleep mode includes the following characteristics:

- The CPU is halted
- The system clock source is typically shutdown. See **Section 27.3.3 "Peripheral Bus Scaling Method"** for specific information.
- There can be a wake-up delay based on the oscillator selection
- The Fail-Safe Clock Monitor (FSCM) does not operate during Sleep mode
- The BOR circuit, if enabled, remains operative during Sleep mode
- The WDT, if enabled, is not automatically cleared prior to entering Sleep mode
- Some peripherals can continue to operate at limited functionality in Sleep mode. These peripherals include I/O pins that detect a change in the input signal, WDT, ADC, UART and peripherals that use an external clock input or the internal LPRC oscillator (e.g., RTCC, Timer1 and Input Capture).
- I/O pins continue to sink or source current in the same manner as they do when the device is not in Sleep
- Modules can be individually disabled by software prior to entering Sleep in order to further reduce consumption

The processor will exit, or 'wake-up', from Sleep on one of the following events:

- On any interrupt from an enabled source that is operating in Sleep. The interrupt priority must be greater than the current CPU priority.
- On any form of device Reset
- On a WDT time-out

If the interrupt priority is lower than or equal to the current priority, the CPU will remain Halted, but the PBCLK will start running and the device will enter into Idle mode.

27.3.2 IDLE MODE

In Idle mode, the CPU is Halted but the System Clock (SYSCLK) source is still enabled. This allows peripherals to continue operation when the CPU is Halted. Peripherals can be individually configured to Halt when entering Idle by setting their respective SIDL bit. Latency, when exiting Idle mode, is very low due to the CPU oscillator source remaining active.

Note 1: Changing the PBCLK divider ratio requires recalculation of peripheral timing. For example, assume the UART is configured for 9600 baud with a PB clock ratio of 1:1 and a POSC of 8 MHz. When the PB clock divisor of 1:2 is used, the input frequency to the baud clock is cut in half; therefore, the baud rate is reduced to 1/2 its former value. Due to numeric truncation in calculations (such as the baud rate divisor), the actual baud rate may be a tiny percentage different than expected. For this reason, any timing calculation required for a peripheral should be performed with the new PB clock frequency instead of scaling the previous value based on a change in the PB divisor ratio.

2: Oscillator start-up and PLL lock delays are applied when switching to a clock source that was disabled and that uses a crystal and/or the PLL. For example, assume the clock source is switched from POSC to LPRC just prior to entering Sleep in order to save power. No oscillator start-up delay would be applied when exiting Idle. However, when switching back to POSC, the appropriate PLL and/or oscillator start-up/lock delays would be applied.

The device enters Idle mode when the SLPEN bit (OSCCON<4>) is clear and a `WAIT` instruction is executed.

The processor will wake or exit from Idle mode on the following events:

- On any interrupt event for which the interrupt source is enabled. The priority of the interrupt event must be greater than the current priority of the CPU. If the priority of the interrupt event is lower than or equal to current priority of the CPU, the CPU will remain Halted and the device will remain in Idle mode.
- On any form of device Reset
- On a WDT time-out interrupt

27.3.3 PERIPHERAL BUS SCALING METHOD

Most of the peripherals on the device are clocked using the PBCLK. The Peripheral Bus (PB) can be scaled relative to the SYSCLK to minimize the dynamic power consumed by the peripherals. The PBCLK divisor is controlled by PBDIV<1:0> (OSCCON<20:19>), allowing SYSCLK to PBCLK ratios of 1:1, 1:2, 1:4 and 1:8. All peripherals using PBCLK are affected when the divisor is changed. Peripherals such as USB, interrupt controller, DMA, bus matrix and prefetch cache are clocked directly from SYSCLK. As a result, they are not affected by PBCLK divisor changes.

Changing the PBCLK divisor affects:

- The CPU to peripheral access latency. The CPU has to wait for next PBCLK edge for a read to complete. In 1:8 mode, this results in a latency of one to seven SYSCLKs.
- The power consumption of the peripherals. Power consumption is directly proportional to the frequency at which the peripherals are clocked. The greater the divisor, the lower the power consumed by the peripherals.

To minimize dynamic power, the PB divisor should be chosen to run the peripherals at the lowest frequency that provides acceptable system performance. When selecting a PBCLK divider, peripheral clock requirements, such as baud rate accuracy, should be taken into account. For example, the UART peripheral may not be able to achieve all baud rate values at some PBCLK divider depending on the SYSCLK value.

© 2009-2013 Microchip Technology Inc.

28.0 SPECIAL FEATURES

Note: This data sheet summarizes the features of the PIC32MX5XX/6XX/7XX family of devices. However, it is not intended to be a comprehensive reference source. To complement the information in this data sheet, refer to **Section 8. "Watchdog Timer and Power-up Timer"** (DS60001114), **Section 24. "Configuration"** (DS60001124) and **Section 33. "Programming and Diagnostics"** (DS60001129) in the *"PIC32 Family Reference Manual"*, which are available from the Microchip web site (www.microchip.com/PIC32).

PIC32MX5XX/6XX/7XX devices include several features intended to maximize application flexibility and reliability and minimize cost through elimination of external components. Key features include:

- Flexible device configuration
- Watchdog Timer (WDT)
- Joint Test Action Group (JTAG) interface
- In-Circuit Serial Programming™ (ICSP™)

28.1 Configuration Bits

The Configuration bits can be programmed using the following registers to select various device configurations.

- DEVCFG0: Device Configuration Word 0
- DEVCFG1: Device Configuration Word 1
- DEVCFG2: Device Configuration Word 2
- DEVCFG3: Device Configuration Word 3
- DEVID: Device and Revision ID Register

REGISTER 28-1: DEVCFG0: DEVICE CONFIGURATION WORD 0

Bit Range	Bit 31/23/15/7	Bit 30/22/14/6	Bit 29/21/13/5	Bit 28/20/12/4	Bit 27/19/11/3	Bit 26/18/10/2	Bit 25/17/9/1	Bit 24/16/8/0
31:24	r-0	r-1	r-1	R/P	r-1	r-1	r-1	R/P
	—	—	—	CP	—	—	—	BWP
23:16	r-1	r-1	r-1	r-1	R/P	R/P	R/P	R/P
	—	—	—	—	PWP<7:4>			
15:8	R/P	R/P	R/P	R/P	r-1	r-1	r-1	r-1
	PWP<3:0>				—	—	—	—
7:0	r-1	r-1	r-1	r-1	R/P	r-1	R/P	R/P
	—	—	—	—	ICESEL	—	DEBUG<1:0>	

Legend:	r = Reserved bit	P = Programmable bit	
R = Readable bit	W = Writable bit	U = Unimplemented bit, read as ‘0’	
-n = Value at POR	‘1’ = Bit is set	‘0’ = Bit is cleared	x = Bit is unknown

bit 31 **Reserved:** Write ‘0’

bit 30-29 **Reserved:** Write ‘1’

bit 28 **CP:** Code-Protect bit

Prevents boot and program Flash memory from being read or modified by an external programming device.
1 = Protection is disabled
0 = Protection is enabled

bit 27-25 **Reserved:** Write ‘1’

bit 24 **BWP:** Boot Flash Write-Protect bit

Prevents boot Flash memory from being modified during code execution.
1 = Boot Flash is writable
0 = Boot Flash is not writable

bit 23-20 **Reserved:** Write ‘1’

bit 19-12 **PWP<7:0>:** Program Flash Write-Protect bits

Prevents selected program Flash memory pages from being modified during code execution. The PWP bits represent the 1’s complement of the number of write-protected program Flash memory pages.
11111111 = Disabled
11111110 = 0xBD00_0FFF
11111101 = 0xBD00_1FFF
11111100 = 0xBD00_2FFF
11111011 = 0xBD00_3FFF
11111010 = 0xBD00_4FFF
11111001 = 0xBD00_5FFF
11111000 = 0xBD00_6FFF
11110111 = 0xBD00_7FFF
11110110 = 0xBD00_8FFF
11110101 = 0xBD00_9FFF
11110100 = 0xBD00_AFFF
11110011 = 0xBD00_BFFF
11110010 = 0xBD00_CFFF
11110001 = 0xBD00_DFFF
11110000 = 0xBD00_EFFF
11101111 = 0xBD00_FFFF
.
.
.
01111111 = 0xBD07_FFFF

bit 11-4 **Reserved:** Write ‘1’

© 2009-2013 Microchip Technology Inc.

REGISTER 28-1: DEVCFG0: DEVICE CONFIGURATION WORD 0 (CONTINUED)

bit 3 **ICESEL:** In-Circuit Emulator/Debugger Communication Channel Select bit
1 = PGEC2/PGED2 pair is used
0 = PGEC1/PGED1 pair is used

bit 2 **Reserved:** Write '1'

bit 1-0 **DEBUG<1:0>:** Background Debugger Enable bits (forced to '11' if code-protect is enabled)
11 = Debugger is disabled
10 = Debugger is enabled
01 = Reserved (same as '11' setting)
00 = Reserved (same as '11' setting)

REGISTER 28-2: DEVCFG1: DEVICE CONFIGURATION WORD 1

Bit Range	Bit 31/23/15/7	Bit 30/22/14/6	Bit 29/21/13/5	Bit 28/20/12/4	Bit 27/19/11/3	Bit 26/18/10/2	Bit 25/17/9/1	Bit 24/16/8/0
31:24	r-1	r-1	r-1	r-1	r-1	r-1	r-1	r-1
	—	—	—	—	—	—	—	—
23:16	R/P	r-1	r-1	R/P	R/P	R/P	R/P	R/P
	FWDTEN	—	—	WDTPS<4:0>				
15:8	R/P	R/P	R/P	R/P	r-1	R/P	R/P	R/P
	FCKSM<1:0>		FPBDIV<1:0>		—	OSCIOFNC	POSCMOD<1:0>	
7:0	R/P	r-1	R/P	r-1	r-1	R/P	R/P	R/P
	IESO	—	FSOSCEN	—	—	FNOSC<2:0>		

Legend:	r = Reserved bit	P = Programmable bit	
R = Readable bit	W = Writable bit	U = Unimplemented bit, read as ‘0’	
-n = Value at POR	‘1’ = Bit is set	‘0’ = Bit is cleared	x = Bit is unknown

bit 31-24 **Reserved:** Write ‘1’

bit 23 **FWDTEN:** Watchdog Timer Enable bit
1 = The WDT is enabled and cannot be disabled by software
0 = The WDT is not enabled; it can be enabled in software

bit 22-21 **Reserved:** Write ‘1’

bit 20-16 **WDTPS<4:0>:** Watchdog Timer Postscale Select bits
10100 = 1:1048576
10011 = 1:524288
10010 = 1:262144
10001 = 1:131072
10000 = 1:65536
01111 = 1:32768
01110 = 1:16384
01101 = 1:8192
01100 = 1:4096
01011 = 1:2048
01010 = 1:1024
01001 = 1:512
01000 = 1:256
00111 = 1:128
00110 = 1:64
00101 = 1:32
00100 = 1:16
00011 = 1:8
00010 = 1:4
00001 = 1:2
00000 = 1:1
All other combinations not shown result in operation = 10100

bit 15-14 **FCKSM<1:0>:** Clock Switching and Monitor Selection Configuration bits
1x = Clock switching is disabled, Fail-Safe Clock Monitor is disabled
01 = Clock switching is enabled, Fail-Safe Clock Monitor is disabled
00 = Clock switching is enabled, Fail-Safe Clock Monitor is enabled

Note 1: Do not disable the POSC (POSCMOD = 11) when using this oscillator source.

© 2009-2013 Microchip Technology Inc.

REGISTER 28-2: DEVCFG1: DEVICE CONFIGURATION WORD 1 (CONTINUED)

bit 13-12 **FPBDIV<1:0>:** Peripheral Bus Clock Divisor Default Value bits
- 11 = PBCLK is SYSCLK divided by 8
- 10 = PBCLK is SYSCLK divided by 4
- 01 = PBCLK is SYSCLK divided by 2
- 00 = PBCLK is SYSCLK divided by 1

bit 11 **Reserved:** Write ‘1’

bit 10 **OSCIOFNC:** CLKO Enable Configuration bit
- 1 = CLKO output is disabled
- 0 = CLKO output signal is active on the OSCO pin; the Primary Oscillator must be disabled or configured for External Clock mode (EC) for the CLKO to be active (POSCMOD<1:0> = 11 or 00)

bit 9-8 **POSCMOD<1:0>:** Primary Oscillator Configuration bits
- 11 = Primary Oscillator disabled
- 10 = HS Oscillator mode selected
- 01 = XT Oscillator mode selected
- 00 = External Clock mode selected

bit 7 **IESO:** Internal External Switchover bit
- 1 = Internal External Switchover mode is enabled (Two-Speed Start-up is enabled)
- 0 = Internal External Switchover mode is disabled (Two-Speed Start-up is disabled)

bit 6 **Reserved:** Write ‘1’

bit 5 **FSOSCEN:** Secondary Oscillator Enable bit
- 1 = Enable the Secondary Oscillator
- 0 = Disable the Secondary Oscillator

bit 4-3 **Reserved:** Write ‘1’

bit 2-0 **FNOSC<2:0>:** Oscillator Selection bits
- 111 = Fast RC Oscillator with divide-by-N (FRCDIV)
- 110 = FRCDIV16 Fast RC Oscillator with fixed divide-by-16 postscaler
- 101 = Low-Power RC Oscillator (LPRC)
- 100 = Secondary Oscillator (SOSC)
- 011 = Primary Oscillator (POSC) with PLL module (XT+PLL, HS+PLL, EC+PLL)
- 010 = Primary Oscillator (XT, HS, EC)**(1)**
- 001 = Fast RC Oscillator with divide-by-N with PLL module (FRCDIV+PLL)
- 000 = Fast RC Oscillator (FRC)

Note 1: Do not disable the POSC (POSCMOD = 11) when using this oscillator source.

REGISTER 28-3: DEVCFG2: DEVICE CONFIGURATION WORD 2

Bit Range	Bit 31/23/15/7	Bit 30/22/14/6	Bit 29/21/13/5	Bit 28/20/12/4	Bit 27/19/11/3	Bit 26/18/10/2	Bit 25/17/9/1	Bit 24/16/8/0
31:24	r-1	r-1	r-1	r-1	r-1	r-1	r-1	r-1
	—	—	—	—	—	—	—	—
23:16	r-1	r-1	r-1	r-1	r-1	R/P	R/P	R/P
	—	—	—	—	—	FPLLODIV<2:0>		
15:8	R/P	r-1	r-1	r-1	r-1	R/P	R/P	R/P
	UPLLEN	—	—	—	—	UPLLIDIV<2:0>		
7:0	r-1	R/P-1	R/P	R/P-1	r-1	R/P	R/P	R/P
	—	FPLLMUL<2:0>			—	FPLLIDIV<2:0>		

Legend:	r = Reserved bit	P = Programmable bit	
R = Readable bit	W = Writable bit	U = Unimplemented bit, read as ‘0’	
-n = Value at POR	‘1’ = Bit is set	‘0’ = Bit is cleared	x = Bit is unknown

bit 31-19 **Reserved:** Write ‘1’

bit 18-16 **FPLLODIV<2:0>:** PLL Output Divider bits
111 = PLL output divided by 256
110 = PLL output divided by 64
101 = PLL output divided by 32
100 = PLL output divided by 16
011 = PLL output divided by 8
010 = PLL output divided by 4
001 = PLL output divided by 2
000 = PLL output divided by 1

bit 15 **UPLLEN:** USB PLL Enable bit
1 = Disable and bypass USB PLL
0 = Enable USB PLL

bit 14-11 **Reserved:** Write ‘1’

bit 10-8 **UPLLIDIV<2:0>:** USB PLL Input Divider bits
111 = 12x divider
110 = 10x divider
101 = 6x divider
100 = 5x divider
011 = 4x divider
010 = 3x divider
010 = 3x divider
001 = 2x divider
000 = 1x divider

bit 7 **Reserved:** Write ‘1’

bit 6-4 **FPLLMUL<2:0>:** PLL Multiplier bits
111 = 24x multiplier
110 = 21x multiplier
101 = 20x multiplier
100 = 19x multiplier
011 = 18x multiplier
010 = 17x multiplier
001 = 16x multiplier
000 = 15x multiplier

bit 3 **Reserved:** Write ‘1’

© 2009-2013 Microchip Technology Inc.

REGISTER 28-3: DEVCFG2: DEVICE CONFIGURATION WORD 2 (CONTINUED)

bit 2-0 **FPLLIDIV<2:0>:** PLL Input Divider bits
`111` = 12x divider
`110` = 10x divider
`101` = 6x divider
`100` = 5x divider
`011` = 4x divider
`010` = 3x divider
`001` = 2x divider
`000` = 1x divider

REGISTER 28-4: DEVCFG3: DEVICE CONFIGURATION WORD 3

Bit Range	Bit 31/23/15/7	Bit 30/22/14/6	Bit 29/21/13/5	Bit 28/20/12/4	Bit 27/19/11/3	Bit 26/18/10/2	Bit 25/17/9/1	Bit 24/16/8/0
31:24	R/P	R/P	r-1	r-1	r-1	R/P	R/P	R/P
	FVBUSONIO	FUSBIDIO	—	—	—	FCANIO(1)	FETHIO(2)	FMIIEN(2)
23:16	r-1	r-1	r-1	r-1	r-1	R/P	R/P	R/P
	—	—	—	—	—	FSRSSEL<2:0>		
15:8	R/P	R/P	R/P	R/P	R/P	R/P	R/P	R/P
	USERID<15:8>							
7:0	R/P	R/P	R/P	R/P	R/P	R/P	R/P	R/P
	USERID<7:0>							

Legend:	r = Reserved bit	P = Programmable bit	
R = Readable bit	W = Writable bit	U = Unimplemented bit, read as ‘0’	
-n = Value at POR	‘1’ = Bit is set	‘0’ = Bit is cleared	x = Bit is unknown

bit 31 **FVBUSONIO:** USB VBUSON Selection bit
1 = VBUSON pin is controlled by the USB module
0 = VBUSON pin is controlled by the port function

bit 30 **FUSBIDIO:** USB USBID Selection bit
1 = USBID pin is controlled by the USB module
0 = USBID pin is controlled by the port function

bit 29-27 **Reserved:** Write ‘1’

bit 26 **FCANIO:** CAN I/O Pin Selection bit(1)
1 = Default CAN I/O Pins
0 = Alternate CAN I/O Pins

bit 25 **FETHIO:** Ethernet I/O Pin Selection bit(2)
1 = Default Ethernet I/O Pins
0 = Alternate Ethernet I/O Pins

bit 24 **FMIIEN:** Ethernet MII Enable bit(2)
1 = MII is enabled
0 = RMII is enabled

bit 23-19 **Reserved:** Write ‘1’

bit 18-16 **FSRSSEL<2:0>:** SRS Select bits
111 = Assign Interrupt Priority 7 to a shadow register set
110 = Assign Interrupt Priority 6 to a shadow register set
•
•
•
001 = Assign Interrupt Priority 1 to a shadow register set
000 = All interrupt priorities are assigned to a shadow register set

bit 15-0 **USERID<15:0>:** User ID bits
This is a 16-bit value that is user-defined and is readable via ICSP™ and JTAG.

Note 1: This bit is Reserved and reads ‘1’ on PIC32MX664/675/695 devices.
2: This bit is Reserved and reads ‘1’ on PIC32MX534/564/575 devices.

© 2009-2013 Microchip Technology Inc.

REGISTER 28-5: DEVID: DEVICE AND REVISION ID REGISTER

Bit Range	Bit 31/23/15/7	Bit 30/22/14/6	Bit 29/21/13/5	Bit 28/20/12/4	Bit 27/19/11/3	Bit 26/18/10/2	Bit 25/17/9/1	Bit 24/16/8/0
31:24	R	R	R	R	R	R	R	R
	VER<3:0>(1)				DEVID<27:24>(1)			
23:16	R	R	R	R	R	R	R	R
	DEVID<23:16>(1)							
15:8	R	R	R	R	R	R	R	R
	DEVID<15:8>(1)							
7:0	R	R	R	R	R	R	R	R
	DEVID<7:0>(1)							

Legend:			
R = Readable bit	W = Writable bit	U = Unimplemented bit, read as ‘0’	
-n = Value at POR	‘1’ = Bit is set	‘0’ = Bit is cleared	x = Bit is unknown

bit 31-28 **VER<3:0>:** Revision Identifier bits(1)

bit 27-0 **DEVID<27:0>:** Device ID bits(1)

Note 1: See the *“PIC32 Flash Programming Specification”* (DS60001145) for a list of Revision and Device ID values.

28.2 Watchdog Timer (WDT)

This section describes the operation of the WDT and Power-up Timer of the PIC32MX5XX/6XX/7XX.

The WDT, when enabled, operates from the internal Low-Power Oscillator (LPRC) clock source and can be used to detect system software malfunctions by resetting the device if the WDT is not cleared periodically in software. Various WDT time-out periods can be selected using the WDT postscaler. The WDT can also be used to wake the device from Sleep or Idle mode.

Key features of the WDT module include:

- Configuration or software controlled
- User-configurable time-out period
- Can wake the device from Sleep or Idle

FIGURE 28-1: WATCHDOG TIMER AND POWER-UP TIMER BLOCK DIAGRAM

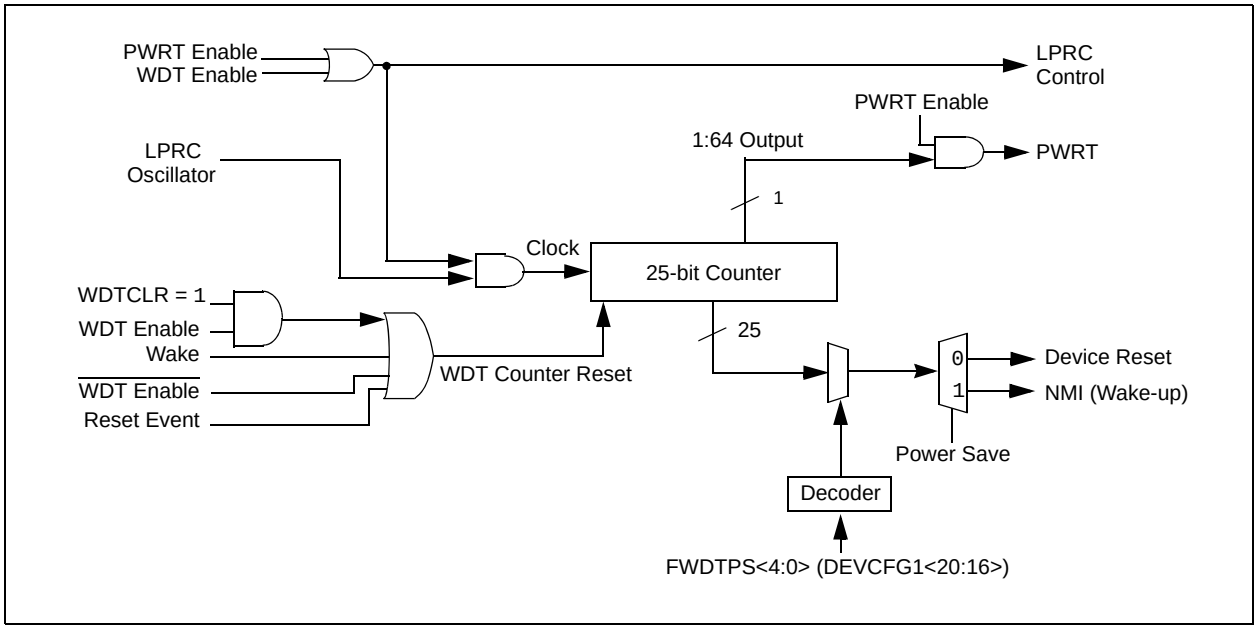

© 2009-2013 Microchip Technology Inc.

REGISTER 28-6: WDTCON: WATCHDOG TIMER CONTROL REGISTER

Bit Range	Bit 31/23/15/7	Bit 30/22/14/6	Bit 29/21/13/5	Bit 28/20/12/4	Bit 27/19/11/3	Bit 26/18/10/2	Bit 25/17/9/1	Bit 24/16/8/0
31:24	U-0	U-0	U-0	U-0	U-0	U-0	U-0	U-0
	—	—	—	—	—	—	—	—
23:16	U-0	U-0	U-0	U-0	U-0	U-0	U-0	U-0
	—	—	—	—	—	—	—	—
15:8	R/W-0	U-0	U-0	U-0	U-0	U-0	U-0	U-0
	ON(1,2)	—	—	—	—	—	—	—
7:0	U-0	R-y	R-y	R-y	R-y	R-y	R/W-0	R/W-0
	—	SWDTPS<4:0>					WDTWINEN	WDTCLR

Legend:	y = Values set from Configuration bits on POR		
R = Readable bit	W = Writable bit	U = Unimplemented bit, read as ‘0’	
-n = Value at POR	‘1’ = Bit is set	‘0’ = Bit is cleared	x = Bit is unknown

bit 31-16 **Unimplemented:** Read as ‘0’

bit 15 **ON:** Watchdog Timer Enable bit(1,2)
1 = Enables the WDT if it is not enabled by the device configuration
0 = Disable the WDT if it was enabled in software

bit 14-7 **Unimplemented:** Read as ‘0’

bit 6-2 **SWDTPS<4:0>:** Shadow Copy of Watchdog Timer Postscaler Value from Device Configuration bits
On reset, these bits are set to the values of the WDTPS <4:0> Configuration bits.

bit 1 **WDTWINEN:** Watchdog Timer Window Enable bit
1 = Enable windowed Watchdog Timer
0 = Disable windowed Watchdog Timer

bit 0 **WDTCLR:** Watchdog Timer Reset bit
1 = Writing a ‘1’ will clear the WDT
0 = Software cannot force this bit to a ‘0’

Note 1: A read of this bit results in a ‘1’ if the Watchdog Timer is enabled by the device configuration or software.

2: When using the 1:1 PBCLK divisor, the user’s software should not read or write the peripheral’s SFRs in the SYSCLK cycle immediately following the instruction that clears the module’s ON bit.

28.3 On-Chip Voltage Regulator

All PIC32MX5XX/6XX/7XX devices' core and digital logic are designed to operate at a nominal 1.8V. To simplify system designs, most devices in the PIC32MX-5XX/6XX/7XX family incorporate an on-chip regulator providing the required core logic voltage from VDD.

A low-ESR capacitor (such as tantalum) must be connected to the VCAP pin (see Figure 28-2). This helps to maintain the stability of the regulator. The recommended value for the filter capacitor is provided in **Section 31.1 "DC Characteristics"**.

Note:	It is important that the low-ESR capacitor is placed as close as possible to the VCAP pin.

28.3.1 ON-CHIP REGULATOR AND POR

It takes a fixed delay for the on-chip regulator to generate an output. During this time, designated as TPU, code execution is disabled. TPU is applied every time the device resumes operation after any power-down, including Sleep mode.

28.3.2 ON-CHIP REGULATOR AND BOR

PIC32MX5XX/6XX/7XX devices also have a simple brown-out capability. If the voltage supplied to the regulator is inadequate to maintain a regulated level, the regulator Reset circuitry will generate a Brown-out Reset (BOR). This event is captured by the BOR flag bit (RCON<1>). The brown-out voltage levels are specified in **Section 31.1 "DC Characteristics"**.

FIGURE 28-2: CONNECTIONS FOR THE ON-CHIP REGULATOR

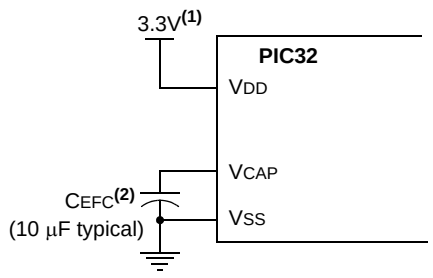

Note 1: These are typical operating voltages. Refer to **Section 31.1 "DC Characteristics"** for the full operating ranges of VDD.

2: It is important that the low-ESR capacitor is placed as close as possible to the VCAP pin.

28.4 Programming and Diagnostics

PIC32MX5XX/6XX/7XX devices provide a complete range of programming and diagnostic features that can increase the flexibility of any application using them. These features allow system designers to include:

- Simplified field programmability using two-wire In-Circuit Serial Programming™ (ICSP™) interfaces
- Debugging using ICSP
- Programming and debugging capabilities using the EJTAG extension of JTAG
- JTAG boundary scan testing for device and board diagnostics

PIC32 devices incorporate two programming and diagnostic modules, and a trace controller, that provide a range of functions to the application developer.

FIGURE 28-3: BLOCK DIAGRAM OF PROGRAMMING, DEBUGGING AND TRACE PORTS

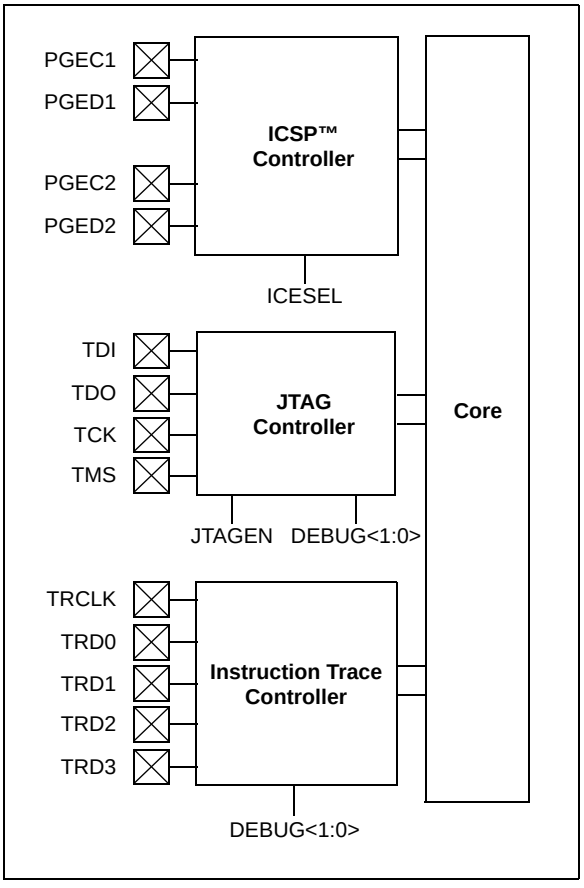

© 2009-2013 Microchip Technology Inc.

REGISTER 28-7: DDPCON: DEBUG DATA PORT CONTROL REGISTER

Bit Range	Bit 31/23/15/7	Bit 30/22/14/6	Bit 29/21/13/5	Bit 28/20/12/4	Bit 27/19/11/3	Bit 26/18/10/2	Bit 25/17/9/1	Bit 24/16/8/0
31:24	U-0	U-0	U-0	U-0	U-0	U-0	U-0	U-0
	—	—	—	—	—	—	—	—
23:16	U-0	U-0	U-0	U-0	U-0	U-0	U-0	U-0
	—	—	—	—	—	—	—	—
15:8	U-0	U-0	U-0	U-0	U-0	U-0	U-0	U-0
	—	—	—	—	—	—	—	—
7:0	U-0	U-0	U-0	U-0	R/W-1	R/W-0	U-0	R/W-0
	—	—	—	—	JTAGEN	TROEN	—	TDOEN

Legend:			
R = Readable bit	W = Writable bit	U = Unimplemented bit, read as ‘0’	
-n = Value at POR	‘1’ = Bit is set	‘0’ = Bit is cleared	x = Bit is unknown

bit 31-4 **Unimplemented:** Read as ‘0’

bit 3 **JTAGEN:** JTAG Port Enable bit
1 = Enable the JTAG port
0 = Disable the JTAG port

bit 2 **TROEN:** Trace Output Enable bit
1 = Enable the trace port
0 = Disable the trace port

bit 1 **Unimplemented:** Read as ‘0’

bit 0 **TDOEN:** TDO Enable for 2-Wire JTAG
1 = 2-wire JTAG protocol uses TDO
0 = 2-wire JTAG protocol does not use TDO

NOTES:

© 2009-2013 Microchip Technology Inc.

29.0 INSTRUCTION SET

The PIC32MX5XX/6XX/7XX family instruction set complies with the MIPS32 Release 2 instruction set architecture. The PIC32 device family does not support the following features:

- Core Extend instructions
- Coprocessor 1 instructions
- Coprocessor 2 instructions

Note:	Refer to *"MIPS32® Architecture for Programmers Volume II: The MIPS32® Instruction Set"* at www.mips.com for more information.

NOTES:

© 2009-2013 Microchip Technology Inc.

30.0 DEVELOPMENT SUPPORT

The PIC® microcontrollers and dsPIC® digital signal controllers are supported with a full range of software and hardware development tools:

- Integrated Development Environment
  - MPLAB® IDE Software
- Compilers/Assemblers/Linkers
  - MPLAB C Compiler for Various Device Families
  - HI-TECH C® for Various Device Families
  - MPASM™ Assembler
  - MPLINK™ Object Linker/ MPLIB™ Object Librarian
  - MPLAB Assembler/Linker/Librarian for Various Device Families
- Simulators
  - MPLAB SIM Software Simulator
- Emulators
  - MPLAB REAL ICE™ In-Circuit Emulator
- In-Circuit Debuggers
  - MPLAB ICD 3
  - PICkit™ 3 Debug Express
- Device Programmers
  - PICkit™ 2 Programmer
  - MPLAB PM3 Device Programmer
- Low-Cost Demonstration/Development Boards, Evaluation Kits, and Starter Kits

30.1 MPLAB Integrated Development Environment Software

The MPLAB IDE software brings an ease of software development previously unseen in the 8/16/32-bit microcontroller market. The MPLAB IDE is a Windows® operating system-based application that contains:

- A single graphical interface to all debugging tools
  - Simulator
  - Programmer (sold separately)
  - In-Circuit Emulator (sold separately)
  - In-Circuit Debugger (sold separately)
- A full-featured editor with color-coded context
- A multiple project manager
- Customizable data windows with direct edit of contents
- High-level source code debugging
- Mouse over variable inspection
- Drag and drop variables from source to watch windows
- Extensive on-line help
- Integration of select third party tools, such as IAR C Compilers

The MPLAB IDE allows you to:

- Edit your source files (either C or assembly)
- One-touch compile or assemble, and download to emulator and simulator tools (automatically updates all project information)
- Debug using:
  - Source files (C or assembly)
  - Mixed C and assembly
  - Machine code

MPLAB IDE supports multiple debugging tools in a single development paradigm, from the cost-effective simulators, through low-cost in-circuit debuggers, to full-featured emulators. This eliminates the learning curve when upgrading to tools with increased flexibility and power.

30.2 MPLAB C Compilers for Various Device Families

The MPLAB C Compiler code development systems are complete ANSI C compilers for Microchip's PIC18, PIC24 and PIC32 families of microcontrollers and the dsPIC30 and dsPIC33 families of digital signal controllers. These compilers provide powerful integration capabilities, superior code optimization and ease of use.

For easy source level debugging, the compilers provide symbol information that is optimized to the MPLAB IDE debugger.

30.3 HI-TECH C for Various Device Families

The HI-TECH C Compiler code development systems are complete ANSI C compilers for Microchip's PIC family of microcontrollers and the dsPIC family of digital signal controllers. These compilers provide powerful integration capabilities, omniscient code generation and ease of use.

For easy source level debugging, the compilers provide symbol information that is optimized to the MPLAB IDE debugger.

The compilers include a macro assembler, linker, preprocessor, and one-step driver, and can run on multiple platforms.

30.4 MPASM Assembler

The MPASM Assembler is a full-featured, universal macro assembler for PIC10/12/16/18 MCUs.

The MPASM Assembler generates relocatable object files for the MPLINK Object Linker, Intel® standard HEX files, MAP files to detail memory usage and symbol reference, absolute LST files that contain source lines and generated machine code and COFF files for debugging.

The MPASM Assembler features include:

- Integration into MPLAB IDE projects
- User-defined macros to streamline assembly code
- Conditional assembly for multi-purpose source files
- Directives that allow complete control over the assembly process

30.5 MPLINK Object Linker/ MPLIB Object Librarian

The MPLINK Object Linker combines relocatable objects created by the MPASM Assembler and the MPLAB C18 C Compiler. It can link relocatable objects from precompiled libraries, using directives from a linker script.

The MPLIB Object Librarian manages the creation and modification of library files of precompiled code. When a routine from a library is called from a source file, only the modules that contain that routine will be linked in with the application. This allows large libraries to be used efficiently in many different applications.

The object linker/library features include:

- Efficient linking of single libraries instead of many smaller files
- Enhanced code maintainability by grouping related modules together
- Flexible creation of libraries with easy module listing, replacement, deletion and extraction

30.6 MPLAB Assembler, Linker and Librarian for Various Device Families

MPLAB Assembler produces relocatable machine code from symbolic assembly language for PIC24, PIC32 and dsPIC devices. MPLAB C Compiler uses the assembler to produce its object file. The assembler generates relocatable object files that can then be archived or linked with other relocatable object files and archives to create an executable file. Notable features of the assembler include:

- Support for the entire device instruction set
- Support for fixed-point and floating-point data
- Command line interface
- Rich directive set
- Flexible macro language
- MPLAB IDE compatibility

© 2009-2013 Microchip Technology Inc.

30.7 MPLAB SIM Software Simulator

The MPLAB SIM Software Simulator allows code development in a PC-hosted environment by simulating the PIC MCUs and dsPIC® DSCs on an instruction level. On any given instruction, the data areas can be examined or modified and stimuli can be applied from a comprehensive stimulus controller. Registers can be logged to files for further run-time analysis. The trace buffer and logic analyzer display extend the power of the simulator to record and track program execution, actions on I/O, most peripherals and internal registers.

The MPLAB SIM Software Simulator fully supports symbolic debugging using the MPLAB C Compilers, and the MPASM and MPLAB Assemblers. The software simulator offers the flexibility to develop and debug code outside of the hardware laboratory environment, making it an excellent, economical software development tool.

30.8 MPLAB REAL ICE In-Circuit Emulator System

MPLAB REAL ICE In-Circuit Emulator System is Microchip's next generation high-speed emulator for Microchip Flash DSC and MCU devices. It debugs and programs PIC® Flash MCUs and dsPIC® Flash DSCs with the easy-to-use, powerful graphical user interface of the MPLAB Integrated Development Environment (IDE), included with each kit.

The emulator is connected to the design engineer's PC using a high-speed USB 2.0 interface and is connected to the target with either a connector compatible with in-circuit debugger systems (RJ11) or with the new high-speed, noise tolerant, Low-Voltage Differential Signal (LVDS) interconnection (CAT5).

The emulator is field upgradable through future firmware downloads in MPLAB IDE. In upcoming releases of MPLAB IDE, new devices will be supported, and new features will be added. MPLAB REAL ICE offers significant advantages over competitive emulators including low-cost, full-speed emulation, run-time variable watches, trace analysis, complex breakpoints, a ruggedized probe interface and long (up to three meters) interconnection cables.

30.9 MPLAB ICD 3 In-Circuit Debugger System

MPLAB ICD 3 In-Circuit Debugger System is Microchip's most cost effective high-speed hardware debugger/programmer for Microchip Flash Digital Signal Controller (DSC) and microcontroller (MCU) devices. It debugs and programs PIC® Flash microcontrollers and dsPIC® DSCs with the powerful, yet easy-to-use graphical user interface of MPLAB Integrated Development Environment (IDE).

The MPLAB ICD 3 In-Circuit Debugger probe is connected to the design engineer's PC using a high-speed USB 2.0 interface and is connected to the target with a connector compatible with the MPLAB ICD 2 or MPLAB REAL ICE systems (RJ-11). MPLAB ICD 3 supports all MPLAB ICD 2 headers.

30.10 PICkit 3 In-Circuit Debugger/ Programmer and PICkit 3 Debug Express

The MPLAB PICkit 3 allows debugging and programming of PIC® and dsPIC® Flash microcontrollers at a most affordable price point using the powerful graphical user interface of the MPLAB Integrated Development Environment (IDE). The MPLAB PICkit 3 is connected to the design engineer's PC using a full-speed USB interface and can be connected to the target via an Microchip debug (RJ-11) connector (compatible with MPLAB ICD 3 and MPLAB REAL ICE). The connector uses two device I/O pins and the reset line to implement in-circuit debugging and In-Circuit Serial Programming™.

The PICkit 3 Debug Express include the PICkit 3, demo board and microcontroller, hookup cables and CDROM with user's guide, lessons, tutorial, compiler and MPLAB IDE software.

© 2009-2013 Microchip Technology Inc.

30.11 PICkit 2 Development Programmer/Debugger and PICkit 2 Debug Express

The PICkit™ 2 Development Programmer/Debugger is a low-cost development tool with an easy to use interface for programming and debugging Microchip's Flash families of microcontrollers. The full featured Windows® programming interface supports baseline (PIC10F, PIC12F5xx, PIC16F5xx), midrange (PIC12F6xx, PIC16F), PIC18F, PIC24, dsPIC30, dsPIC33, and PIC32 families of 8-bit, 16-bit, and 32-bit microcontrollers, and many Microchip Serial EEPROM products. With Microchip's powerful MPLAB Integrated Development Environment (IDE) the PICkit™ 2 enables in-circuit debugging on most PIC® microcontrollers. In-Circuit-Debugging runs, halts and single steps the program while the PIC microcontroller is embedded in the application. When halted at a breakpoint, the file registers can be examined and modified.

The PICkit 2 Debug Express include the PICkit 2, demo board and microcontroller, hookup cables and CDROM with user's guide, lessons, tutorial, compiler and MPLAB IDE software.

30.12 MPLAB PM3 Device Programmer

The MPLAB PM3 Device Programmer is a universal, CE compliant device programmer with programmable voltage verification at V_{DDMIN} and V_{DDMAX} for maximum reliability. It features a large LCD display (128 x 64) for menus and error messages and a modular, detachable socket assembly to support various package types. The ICSP™ cable assembly is included as a standard item. In Stand-Alone mode, the MPLAB PM3 Device Programmer can read, verify and program PIC devices without a PC connection. It can also set code protection in this mode. The MPLAB PM3 connects to the host PC via an RS-232 or USB cable. The MPLAB PM3 has high-speed communications and optimized algorithms for quick programming of large memory devices and incorporates an MMC card for file storage and data applications.

30.13 Demonstration/Development Boards, Evaluation Kits, and Starter Kits

A wide variety of demonstration, development and evaluation boards for various PIC MCUs and dsPIC DSCs allows quick application development on fully functional systems. Most boards include prototyping areas for adding custom circuitry and provide application firmware and source code for examination and modification.

The boards support a variety of features, including LEDs, temperature sensors, switches, speakers, RS-232 interfaces, LCD displays, potentiometers and additional EEPROM memory.

The demonstration and development boards can be used in teaching environments, for prototyping custom circuits and for learning about various microcontroller applications.

In addition to the PICDEM™ and dsPICDEM™ demonstration/development board series of circuits, Microchip has a line of evaluation kits and demonstration software for analog filter design, KEELOQ® security ICs, CAN, IrDA®, PowerSmart battery management, SEEVAL® evaluation system, Sigma-Delta ADC, flow rate sensing, plus many more.

Also available are starter kits that contain everything needed to experience the specified device. This usually includes a single application and debug capability, all on one board.

Check the Microchip web page (www.microchip.com) for the complete list of demonstration, development and evaluation kits.

© 2009-2013 Microchip Technology Inc.

31.0 ELECTRICAL CHARACTERISTICS

This section provides an overview of the PIC32MX5XX/6XX/7XX electrical characteristics. Additional information will be provided in future revisions of this document as it becomes available.

Absolute maximum ratings for the PIC32MX5XX/6XX/7XX devices are listed below. Exposure to these maximum rating conditions for extended periods may affect device reliability. Functional operation of the device at these or any other conditions, above the parameters indicated in the operation listings of this specification, is not implied.

Absolute Maximum Ratings

(See Note 1)

Ambient temperature under bias ..... -40°C to +105°C
Storage temperature ..... -65°C to +150°C
Voltage on V_{DD} with respect to V_{SS} ..... -0.3V to +4.0V
Voltage on any pin that is not 5V tolerant, with respect to V_{SS} **(Note 3)** ..... -0.3V to (V_{DD} + 0.3V)
Voltage on any 5V tolerant pin with respect to V_{SS} when $V_{DD} \geq 2.3V$ **(Note 3)** ..... -0.3V to +5.5V
Voltage on any 5V tolerant pin with respect to V_{SS} when $V_{DD} < 2.3V$ **(Note 3)** ..... -0.3V to +3.6V
Voltage on V_{BUS} with respect to V_{SS} ..... -0.3V to +5.5V
Maximum current out of V_{SS} pin(s) ..... 300 mA
Maximum current into V_{DD} pin(s) **(Note 2)** ..... 300 mA
Maximum output current sunk by any I/O pin ..... 25 mA
Maximum output current sourced by any I/O pin ..... 25 mA
Maximum current sunk by all ports ..... 200 mA
Maximum current sourced by all ports **(Note 2)** ..... 200 mA

Note 1: Stresses above those listed under **"Absolute Maximum Ratings"** may cause permanent damage to the device. This is a stress rating only and functional operation of the device at those or any other conditions, above those indicated in the operation listings of this specification, is not implied. Exposure to maximum rating conditions for extended periods may affect device reliability.

2: Maximum allowable current is a function of device maximum power dissipation (see Table 31-2).

3: See the **"Pin Diagrams"** section for the 5V tolerant pins.

31.1 DC Characteristics

TABLE 31-1: OPERATING MIPS VS. VOLTAGE

Characteristic	V_{DD} Range (in Volts)(1)	Temp. Range (in °C)	Max. Frequency
			PIC32MX5XX/6XX/7XX
DC5	2.3-3.6V	-40°C to +85°C	80 MHz
DC5b	2.3-3.6V	-40°C to +105°C	80 MHz

Note 1: Overall functional device operation at $V_{BORMIN} < V_{DD} < V_{DDMIN}$ is tested, but not characterized. All device Analog modules, such as ADC, etc., will function, but with degraded performance below V_{DDMIN}. Refer to parameter BO10 in Table 31-10 for BOR values.

TABLE 31-2: THERMAL OPERATING CONDITIONS

Rating	Symbol	Min.	Typical	Max.	Unit
Industrial Temperature Devices					
Operating Junction Temperature Range	T_J	-40	—	+125	°C
Operating Ambient Temperature Range	T_A	-40	—	+85	°C
V-Temp Temperature Devices					
Operating Junction Temperature Range	T_J	-40	—	+140	°C
Operating Ambient Temperature Range	T_A	-40	—	+105	°C
Power Dissipation: Internal Chip Power Dissipation: $P_{INT} = V_{DD} \times (I_{DD} - S\ I_{OH})$ I/O Pin Power Dissipation: $I/O = S\ (\{V_{DD} - V_{OH}\} \times I_{OH}) + S\ (V_{OL} \times I_{OL})$	P_D	$P_{INT} + P_{I/O}$			W
Maximum Allowed Power Dissipation	P_{DMAX}	$(T_J - T_A)/\theta_{JA}$			W

TABLE 31-3: THERMAL PACKAGING CHARACTERISTICS

Characteristics	Symbol	Typical	Max.	Unit	See Note
Package Thermal Resistance, 121-Pin TFBGA (10x10x1.1 mm)	θ_{JA}	40	—	°C/W	**1**
Package Thermal Resistance, 100-Pin TQFP (14x14x1 mm)	θ_{JA}	43	—	°C/W	**1**
Package Thermal Resistance, 100-Pin TQFP (12x12x1 mm)	θ_{JA}	43	—	°C/W	**1**
Package Thermal Resistance, 64-Pin TQFP (10x10x1 mm)	θ_{JA}	47	—	°C/W	**1**
Package Thermal Resistance, 64-Pin QFN (9x9x0.9 mm)	θ_{JA}	28	—	°C/W	**1**
Package Thermal Resistance, 124-Pin VTLA (9x9x0.9 mm)	θ_{JA}	21	—	°C/W	**1**

Note 1: Junction to ambient thermal resistance, Theta-JA (θ_{JA}) numbers are achieved by package simulations.

© 2009-2013 Microchip Technology Inc.

TABLE 31-4: DC TEMPERATURE AND VOLTAGE SPECIFICATIONS

DC CHARACTERISTICS			Standard Operating Conditions: 2.3V to 3.6V (unless otherwise stated) Operating temperature -40°C ≤ TA ≤ +85°C for Industrial -40°C ≤ TA ≤ +105°C for V-Temp				
Param. No.	**Symbol**	**Characteristics**	**Min.**	**Typical**	**Max.**	**Units**	**Conditions**
Operating Voltage							
DC10	VDD	**Supply Voltage**	2.3	—	3.6	V	—
DC12	VDR	**RAM Data Retention Voltage(1)**	1.75	—	—	V	—
DC16	VPOR	**VDD Start Voltage** to Ensure Internal Power-on Reset Signal	1.75	—	2.1	V	—
DC17	SVDD	**VDD Rise Rate** to Ensure Internal Power-on Reset Signal	0.00005	—	0.115	V/µs	—

Note 1: This is the limit to which VDD can be lowered without losing RAM data.

2: Overall functional device operation at VBORMIN < VDD < VDDMIN is tested, but not characterized. All device Analog modules, such as ADC, etc., will function, but with degraded performance below VDDMIN. Refer to parameter BO10 in Table 31-10 for BOR values.

TABLE 31-5: DC CHARACTERISTICS: OPERATING CURRENT (IDD)

DC CHARACTERISTICS			Standard Operating Conditions: 2.3V to 3.6V (unless otherwise stated) Operating temperature -40°C ≤ TA ≤ +85°C for Industrial -40°C ≤ TA ≤ +105°C for V-Temp				
Param. No.	**Typical(3)**	**Max.**	**Units**	**Conditions**			
Operating Current (IDD)(1,2) for PIC32MX575/675/695/775/795 Family Devices							
DC20	6	9	mA	Code executing from Flash	-40ºC, +25ºC, +85ºC	—	4 MHz
DC20b	7	10			+105ºC		
DC20a	4	—		Code executing from SRAM	—		
DC21	37	40	mA	Code executing from Flash	—	—	25 MHz **(Note 4)**
DC21a	25	—		Code executing from SRAM			
DC22	64	70	mA	Code executing from Flash	—	—	60 MHz **(Note 4)**
DC22a	61	—		Code executing from SRAM			
DC23	85	98	mA	Code executing from Flash	-40ºC, +25ºC, +85ºC	—	80 MHz
DC23b	90	120			+105ºC		
DC23a	85	—		Code executing from SRAM	—		
DC25a	125	150	µA	—	+25°C	3.3V	LPRC (31 kHz) **(Note 4)**

Note 1: A device's IDD supply current is mainly a function of the operating voltage and frequency. Other factors, such as PBCLK (Peripheral Bus Clock) frequency, number of peripheral modules enabled, internal code execution pattern, execution from Program Flash memory vs. SRAM, I/O pin loading and switching rate, oscillator type, as well as temperature, can have an impact on the current consumption.

2: The test conditions for IDD measurements are as follows:

- Oscillator mode is EC (for 8 MHz and below) and EC+PLL (for above 8 MHz) with OSC1 driven by external square wave from rail-to-rail, (OSC1 input clock input over/undershoot < 100 mV required)
- OSC2/CLKO is configured as an I/O input pin
- USB PLL oscillator is disabled if the USB module is implemented, PBCLK divisor = 1:8
- CPU, program Flash, and SRAM data memory are operational, program Flash memory Wait states = `111`, Program Cache and Prefetch are disabled and SRAM data memory Wait states = 1
- No peripheral modules are operating, (ON bit = `0`)
- WDT, Clock Switching, Fail-Safe Clock Monitor, and Secondary Oscillator are disabled
- All I/O pins are configured as inputs and pulled to VSS
- $\overline{\text{MCLR}}$ = VDD
- CPU executing `while(1)` statement from Flash
- RTCC and JTAG are disabled

3: Data in "Typical" column is at 3.3V, 25°C at specified operating frequency unless otherwise stated. Parameters are for design guidance only and are not tested.

4: This parameter is characterized, but not tested in manufacturing.

© 2009-2013 Microchip Technology Inc.

TABLE 31-5: DC CHARACTERISTICS: OPERATING CURRENT (IDD) (CONTINUED)

DC CHARACTERISTICS			Standard Operating Conditions: 2.3V to 3.6V (unless otherwise stated) Operating temperature -40°C ≤ TA ≤ +85°C for Industrial -40°C ≤ TA ≤ +105°C for V-Temp				
Param. No.	**Typical(3)**	**Max.**	**Units**	**Conditions**			
Operating Current (IDD)(1,2) for PIC32MX534/564/664/764 Family Devices							
DC20c	6	9	mA	Code executing from Flash	-40ºC, +25ºC, +85ºC	—	4 MHz
DC20d	7	10			+105ºC		
DC20e	2	—		Code executing from SRAM	—		
DC21b	19	32	mA	Code executing from Flash	—	—	25 MHz **(Note 4)**
DC21c	14	—		Code executing from SRAM			
DC22b	31	50	mA	Code executing from Flash	—	—	60 MHz **(Note 4)**
DC22c	29	—		Code executing from SRAM			
DC23c	39	65	mA	Code executing from Flash	-40ºC, +25ºC, +85ºC	—	80 MHz
DC23d	49	70			+105ºC		
DC23e	39	—		Code executing from SRAM	—		
DC25b	100	150	µA	—	+25°C	3.3V	LPRC (31 kHz) **(Note 4)**

Note 1: A device's IDD supply current is mainly a function of the operating voltage and frequency. Other factors, such as PBCLK (Peripheral Bus Clock) frequency, number of peripheral modules enabled, internal code execution pattern, execution from Program Flash memory vs. SRAM, I/O pin loading and switching rate, oscillator type, as well as temperature, can have an impact on the current consumption.

2: The test conditions for IDD measurements are as follows:

- Oscillator mode is EC (for 8 MHz and below) and EC+PLL (for above 8 MHz) with OSC1 driven by external square wave from rail-to-rail, (OSC1 input clock input over/undershoot < 100 mV required)
- OSC2/CLKO is configured as an I/O input pin
- USB PLL oscillator is disabled if the USB module is implemented, PBCLK divisor = 1:8
- CPU, program Flash, and SRAM data memory are operational, program Flash memory Wait states = `111`, Program Cache and Prefetch are disabled and SRAM data memory Wait states = `1`
- No peripheral modules are operating, (ON bit = `0`)
- WDT, Clock Switching, Fail-Safe Clock Monitor, and Secondary Oscillator are disabled
- All I/O pins are configured as inputs and pulled to VSS
- $\overline{\text{MCLR}}$ = VDD
- CPU executing `while(1)` statement from Flash
- RTCC and JTAG are disabled

3: Data in "Typical" column is at 3.3V, 25°C at specified operating frequency unless otherwise stated. Parameters are for design guidance only and are not tested.

4: This parameter is characterized, but not tested in manufacturing.

TABLE 31-6: DC CHARACTERISTICS: IDLE CURRENT (I_{IDLE})

DC CHARACTERISTICS			Standard Operating Conditions: 2.3V to 3.6V (unless otherwise stated) Operating temperature -40°C ≤ TA ≤ +85°C for Industrial -40°C ≤ TA ≤ +105°C for V-Temp			
Parameter No.	**Typical(2)**	**Max.**	**Units**	**Conditions**		
Idle Current (I_{IDLE})(1) for PIC32MX575/675/695/775/795 Family Devices						
DC30	4.5	6.5	mA	-40ºC, +25ºC, +85ºC	—	4 MHz
DC30b	5	7		+105°C		
DC31	13	15	mA	-40ºC, +25ºC, +85ºC	—	25 MHz **(Note 3)**
DC32	28	30	mA	-40ºC, +25ºC, +85ºC	—	60 MHz **(Note 3)**
DC33	36	42	mA	-40ºC, +25ºC, +85ºC	—	80 MHz
DC33b	39	45	mA	+105°C		
DC34	—	40	µA	-40°C	2.3V	LPRC (31 kHz) **(Note 3)**
DC34a		75		+25°C		
DC34b		800		+85°C		
DC34c		1000		+105°C		
DC35	35	—	µA	-40°C	3.3V	
DC35a	65			+25°C		
DC35b	600			+85°C		
DC35c	800			+105°C		
DC36	—	43	µA	-40°C	3.6V	
DC36a		106		+25°C		
DC36b		800		+85°C		
DC36c		1000		+105°C		

Note 1: The test conditions for I_{IDLE} current measurements are as follows:

- Oscillator mode is EC (for 8 MHz and below) and EC+PLL (for above 8 MHz) with OSC1 driven by external square wave from rail-to-rail, (OSC1 input clock input over/undershoot < 100 mV required)
- OSC2/CLKO is configured as an I/O input pin
- USB PLL oscillator is disabled if the USB module is implemented, PBCLK divisor = 1:8
- CPU is in Idle mode, program Flash memory Wait states = 111, Program Cache and Prefetch are disabled and SRAM data memory Wait states = 1
- No peripheral modules are operating, (ON bit = 0)
- WDT, Clock Switching, Fail-Safe Clock Monitor, and Secondary Oscillator are disabled
- All I/O pins are configured as inputs and pulled to V_{SS}
- $\overline{MCLR}$ = V_{DD}
- RTCC and JTAG are disabled

2: Data in “Typical” column is at 3.3V, 25°C unless otherwise stated. Parameters are for design guidance only and are not tested.

3: This parameter is characterized, but not tested in manufacturing.

© 2009-2013 Microchip Technology Inc.

TABLE 31-6: DC CHARACTERISTICS: IDLE CURRENT (I_{IDLE}) (CONTINUED)

DC CHARACTERISTICS			Standard Operating Conditions: 2.3V to 3.6V (unless otherwise stated) Operating temperature -40°C ≤ TA ≤ +85°C for Industrial -40°C ≤ TA ≤ +105°C for V-Temp			
Parameter No.	**Typical(2)**	**Max.**	**Units**	**Conditions**		
Idle Current (I_{IDLE})(1) for PIC32MX534/564/664/764 Family Devices						
DC30a	1.5	5	mA	-40ºC, +25ºC, +85ºC	—	4 MHz
DC30c	3.5	6		+105ºC		
DC31a	7	11		-40ºC, +25ºC, +85ºC	—	25 MHz **(Note 3)**
DC32a	13	20	mA	-40ºC, +25ºC, +85ºC	—	60 MHz **(Note 3)**
DC33a	17	25	mA	-40ºC, +25ºC, +85ºC	—	80 MHz
DC33c	20	27		+105ºC		
DC34c	—	40	µA	-40°C	2.3V	LPRC (31 kHz) **(Note 3)**
DC34d		75		+25°C		
DC34e		800		+85°C		
DC34f		1000		+105ºC		
DC35c	30	—	µA	-40°C	3.3V	
DC35d	55			+25°C		
DC35e	230			+85°C		
DC35f	800			+105ºC		
DC36c	—	43	µA	-40°C	3.6V	
DC36d		106		+25°C		
DC36e		800		+85°C		
DC36f		1000		+105ºC		

Note 1: The test conditions for I_{IDLE} current measurements are as follows:

- Oscillator mode is EC (for 8 MHz and below) and EC+PLL (for above 8 MHz) with OSC1 driven by external square wave from rail-to-rail, (OSC1 input clock input over/undershoot < 100 mV required)
- OSC2/CLKO is configured as an I/O input pin
- USB PLL oscillator is disabled if the USB module is implemented, PBCLK divisor = 1:8
- CPU is in Idle mode, program Flash memory Wait states = 111, Program Cache and Prefetch are disabled and SRAM data memory Wait states = 1
- No peripheral modules are operating, (ON bit = 0)
- WDT, Clock Switching, Fail-Safe Clock Monitor, and Secondary Oscillator are disabled
- All I/O pins are configured as inputs and pulled to V_{SS}
- $\overline{MCLR}$ = V_{DD}
- RTCC and JTAG are disabled

2: Data in “Typical” column is at 3.3V, 25°C unless otherwise stated. Parameters are for design guidance only and are not tested.

3: This parameter is characterized, but not tested in manufacturing.

TABLE 31-7: DC CHARACTERISTICS: POWER-DOWN CURRENT (I_{PD})

DC CHARACTERISTICS			Standard Operating Conditions: 2.3V to 3.6V (unless otherwise stated) Operating temperature -40°C ≤ TA ≤ +85°C for Industrial -40°C ≤ TA ≤ +105°C for V-Temp			
Param. No.	**Typical(2)**	**Max.**	**Units**	**Conditions**		
Power-Down Current (I_{PD})(1) for PIC32MX575/675/695/775/795 Family Devices						
DC40	10	40	μA	-40°C	2.3V	Base Power-Down Current **(Note 6)**
DC40a	36	100		+25°C		
DC40b	400	720		+85°C		
DC40h	900	1800		+105°C		
DC40c	41	120		+25°C	3.3V	Base Power-Down Current
DC40d	22	80		-40°C	3.6V	Base Power-Down Current
DC40e	42	120		+25°C		
DC40g	315	400(5)		+70°C		
DC40f	410	800		+85°C		
DC40i	1000	2000		+105°C		
Module Differential Current for PIC32MX575/675/695/775/795 Family Devices						
DC41	—	10	μA	—	2.3V	Watchdog Timer Current: ΔI_{WDT} **(Notes 3,6)**
DC41a	5	—			3.3V	Watchdog Timer Current: ΔI_{WDT} **(Note 3)**
DC41b	—	20			3.6V	Watchdog Timer Current: ΔI_{WDT} **(Note 3)**
DC42	—	40	μA	—	2.3V	RTCC + Timer1 w/32 kHz Crystal: ΔI_{RTCC} **(Notes 3,6)**
DC42a	23	—			3.3V	RTCC + Timer1 w/32 kHz Crystal: ΔI_{RTCC} **(Note 3)**
DC42b	—	50			3.6V	RTCC + Timer1 w/32 kHz Crystal: ΔI_{RTCC} **(Note 3)**
DC43	—	1300	μA	—	2.5V	ADC: ΔI_{ADC} **(Notes 3,4,6)**
DC43a	1100	—			3.3V	ADC: ΔI_{ADC} **(Notes 3,4)**
DC43b	—	1300			3.6V	ADC: ΔI_{ADC} **(Notes 3,4)**

Note 1: The test conditions for I_{PD} current measurements are as follows:

- Oscillator mode is EC (for 8 MHz and below) and EC+PLL (for above 8 MHz) with OSC1 driven by external square wave from rail-to-rail, (OSC1 input clock input over/undershoot < 100 mV required)
- OSC2/CLKO is configured as an I/O input pin
- USB PLL oscillator is disabled if the USB module is implemented, PBCLK divisor = 1:8
- CPU is in Sleep mode, program Flash memory Wait states = 111, Program Cache and Prefetch are disabled and SRAM data memory Wait states = 1
- No peripheral modules are operating, (ON bit = 0)
- WDT, Clock Switching, Fail-Safe Clock Monitor, and Secondary Oscillator are disabled
- All I/O pins are configured as inputs and pulled to V_{SS}
- $\overline{MCLR}$ = V_{DD}
- RTCC and JTAG are disabled

2: Data in the "Typical" column is at 3.3V, 25°C unless otherwise stated. Parameters are for design guidance only and are not tested.

3: The Δ current is the additional current consumed when the module is enabled. This current should be added to the base I_{PD} current.

4: Test conditions for ADC module differential current are as follows: Internal ADC RC oscillator enabled.

5: Data is characterized at +70°C and not tested. Parameter is for design guidance only.

6: This parameter is characterized, but not tested in manufacturing.

© 2009-2013 Microchip Technology Inc.

TABLE 31-7: DC CHARACTERISTICS: POWER-DOWN CURRENT (I_{PD}) (CONTINUED)

DC CHARACTERISTICS			Standard Operating Conditions: 2.3V to 3.6V (unless otherwise stated) Operating temperature -40°C ≤ TA ≤ +85°C for Industrial -40°C ≤ TA ≤ +105°C for V-Temp			
Param. No.	**Typical(2)**	**Max.**	**Units**	**Conditions**		
Power-Down Current (I_{PD})(1) for PIC32MX534/564/664/764 Family Devices						
DC40g	12	40	μA	-40°C	2.3V	Base Power-Down Current **(Note 6)**
DC40h	20	120		+25°C		
DC40i	210	600		+85°C		
DC40o	400	1000		+105°C		
DC40j	20	120		+25°C	3.3V	Base Power-Down Current
DC40k	15	80		-40°C	3.6V	Base Power-Down Current
DC40l	20	120		+25°C		
DC40m	113	350(5)		+70°C		
DC40n	220	650		+85°C		
DC40p	500	1000		+105°C		
Module Differential Current for PIC32MX534/564/664/764 Family Devices						
DC41c	—	10	μA	—	2.5V	Watchdog Timer Current: ΔI_{WDT} **(Notes 3,6)**
DC41d	5	—			3.3V	Watchdog Timer Current: ΔI_{WDT} **(Note 3)**
DC41e	—	20			3.6V	Watchdog Timer Current: ΔI_{WDT} **(Note 3)**
DC42c	—	40	μA	—	2.5V	RTCC + Timer1 w/32 kHz Crystal: ΔI_{RTCC} **(Notes 3,6)**
DC42d	23	—			3.3V	RTCC + Timer1 w/32 kHz Crystal: ΔI_{RTCC} **(Note 3)**
DC42e	—	50			3.6V	RTCC + Timer1 w/32 kHz Crystal: ΔI_{RTCC} **(Note 3)**
DC43c	—	1300	μA	—	2.5V	ADC: ΔI_{ADC} **(Notes 3,4,6)**
DC43d	1100	—			3.3V	ADC: ΔI_{ADC} **(Notes 3,4)**
DC43e	—	1300			3.6V	ADC: ΔI_{ADC} **(Notes 3,4)**

Note 1: The test conditions for I_{PD} current measurements are as follows:

- Oscillator mode is EC (for 8 MHz and below) and EC+PLL (for above 8 MHz) with OSC1 driven by external square wave from rail-to-rail, (OSC1 input clock input over/undershoot < 100 mV required)
- OSC2/CLKO is configured as an I/O input pin
- USB PLL oscillator is disabled if the USB module is implemented, PBCLK divisor = 1:8
- CPU is in Sleep mode, program Flash memory Wait states = 111, Program Cache and Prefetch are disabled and SRAM data memory Wait states = 1
- No peripheral modules are operating, (ON bit = 0)
- WDT, Clock Switching, Fail-Safe Clock Monitor, and Secondary Oscillator are disabled
- All I/O pins are configured as inputs and pulled to V_{SS}
- $\overline{MCLR}$ = V_{DD}
- RTCC and JTAG are disabled

2: Data in the "Typical" column is at 3.3V, 25°C unless otherwise stated. Parameters are for design guidance only and are not tested.

3: The Δ current is the additional current consumed when the module is enabled. This current should be added to the base I_{PD} current.

4: Test conditions for ADC module differential current are as follows: Internal ADC RC oscillator enabled.

5: Data is characterized at +70°C and not tested. Parameter is for design guidance only.

6: This parameter is characterized, but not tested in manufacturing.

TABLE 31-8: DC CHARACTERISTICS: I/O PIN INPUT SPECIFICATIONS

DC CHARACTERISTICS			Standard Operating Conditions: 2.3V to 3.6V (unless otherwise stated) Operating temperature -40°C ≤ TA ≤ +85°C for Industrial -40°C ≤ TA ≤ +105°C for V-Temp				
Param. No.	**Symbol**	**Characteristics**	**Min.**	**Typical(1)**	**Max.**	**Units**	**Conditions**
	VIL	**Input Low Voltage**					
DI10		I/O Pins:					
		with TTL Buffer	VSS	—	0.15 VDD	V	
		with Schmitt Trigger Buffer	VSS	—	0.2 VDD	V	
DI15		$\overline{\text{MCLR}}$(2)	VSS	—	0.2 VDD	V	
DI16		OSC1 (XT mode)	VSS	—	0.2 VDD	V	**(Note 4)**
DI17		OSC1 (HS mode)	VSS	—	0.2 VDD	V	**(Note 4)**
DI18		SDAx, SCLx	VSS	—	0.3 VDD	V	SMBus disabled **(Note 4)**
DI19		SDAx, SCLx	VSS	—	0.8	V	SMBus enabled **(Note 4)**
	VIH	**Input High Voltage**					
DI20		I/O Pins not 5V-tolerant(5)	0.65 VDD	—	VDD	V	**(Note 4,6)**
		I/O Pins 5V-tolerant with PMP(5)	0.25 VDD + 0.8V	—	5.5	V	**(Note 4,6)**
		I/O Pins 5V-tolerant(5)	0.65 VDD	—	5.5	V	
DI28		SDAx, SCLx	0.65 VDD	—	5.5	V	SMBus disabled **(Note 4,6)**
DI29		SDAx, SCLx	2.1	—	5.5	V	SMBus enabled, 2.3V ≤ VPIN ≤ 5.5 **(Note 4,6)**
DI30	ICNPU	**Change Notification Pull-up Current**	—	—	-50	μA	VDD = 3.3V, VPIN = VSS **(Note 3,6)**
DI31	ICNPD	**Change Notification Pull-down Current(4)**	—	50	—	μA	VDD = 3.3V, VPIN = VDD

Note 1: Data in "Typical" column is at 3.3V, 25°C unless otherwise stated. Parameters are for design guidance only and are not tested.

2: The leakage current on the $\overline{\text{MCLR}}$ pin is strongly dependent on the applied voltage level. The specified levels represent normal operating conditions. Higher leakage current may be measured at different input voltages.

3: Negative current is defined as current sourced by the pin.

4: This parameter is characterized, but not tested in manufacturing.

5: See the **"Pin Diagrams"** section for the 5V-tolerant pins.

6: The VIH specification is only in relation to externally applied inputs and not with respect to the user-selectable pull-ups. Externally applied high impedance or open drain input signals utilizing the PIC32 internal pull-ups are guaranteed to be recognized as a logic "high" internally to the PIC32 device, provided that the external load does not exceed the maximum value of ICNPU.

7: VIL source < (VSS - 0.3). Characterized but not tested.

8: VIH source > (VDD + 0.3) for non-5V tolerant pins only.

9: Digital 5V tolerant pins do not have an internal high side diode to VDD, and therefore, cannot tolerate any "positive" input injection current.

10: Injection currents > | 0 | can affect the ADC results by approximately 4 to 6 counts (i.e., VIH Source > (VDD + 0.3) or VIL source < (VSS - 0.3)).

11: Any number and/or combination of I/O pins not excluded under IICL or IICH conditions are permitted provided the "absolute instantaneous" sum of the input injection currents from all pins do not exceed the specified limit. If **Note 7**, IICL = (((VSS - 0.3) - VIL source) / RS). If **Note 8**, IICH = ((IICH source - (VDD + 0.3)) / RS). RS = Resistance between input source voltage and device pin. If (VSS - 0.3) ≤ VSOURCE ≤ (VDD + 0.3), injection current = 0.

© 2009-2013 Microchip Technology Inc.

TABLE 31-8: DC CHARACTERISTICS: I/O PIN INPUT SPECIFICATIONS

DC CHARACTERISTICS			Standard Operating Conditions: 2.3V to 3.6V (unless otherwise stated) Operating temperature -40°C ≤ TA ≤ +85°C for Industrial -40°C ≤ TA ≤ +105°C for V-Temp				
Param. No.	**Symbol**	**Characteristics**	**Min.**	**Typical(1)**	**Max.**	**Units**	**Conditions**
	IIL	**Input Leakage Current(3)**					
DI50		I/O Ports	—	—	±1	μA	VSS ≤ VPIN ≤ VDD, Pin at high-impedance
DI51		Analog Input Pins	—	—	±1	μA	VSS ≤ VPIN ≤ VDD, Pin at high-impedance
DI55		$\overline{\text{MCLR}}$(2)	—	—	±1	μA	VSS ≤ VPIN ≤ VDD
DI56		OSC1	—	—	±1	μA	VSS ≤ VPIN ≤ VDD, XT and HS modes
DI60a	IICL	**Input Low Injection Current**	0	—	-5(7,10)	mA	This parameter applies to all pins, with the exception of RB10. Maximum IICH current for this exception is 0 mA.
DI60b	IICH	**Input High Injection Current**	0	—	+5(8,9,10)	mA	This parameter applies to all pins, with the exception of all 5V tolerant pins, SOSCI, and RB10. Maximum IICH current for these exceptions is 0 mA.
DI60c	∑IICT	**Total Input Injection Current (sum of all I/O and control pins)**	-20(11)	—	+20(11)	mA	Absolute instantaneous sum of all ± input injection currents from all I/O pins (| IICL + | IICH |) ≤ ∑IICT

Note 1: Data in "Typical" column is at 3.3V, 25°C unless otherwise stated. Parameters are for design guidance only and are not tested.

2: The leakage current on the $\overline{\text{MCLR}}$ pin is strongly dependent on the applied voltage level. The specified levels represent normal operating conditions. Higher leakage current may be measured at different input voltages.

3: Negative current is defined as current sourced by the pin.

4: This parameter is characterized, but not tested in manufacturing.

5: See the **"Pin Diagrams"** section for the 5V-tolerant pins.

6: The VIH specification is only in relation to externally applied inputs and not with respect to the user-selectable pull-ups. Externally applied high impedance or open drain input signals utilizing the PIC32 internal pull-ups are guaranteed to be recognized as a logic "high" internally to the PIC32 device, provided that the external load does not exceed the maximum value of ICNPU.

7: VIL source < (VSS - 0.3). Characterized but not tested.

8: VIH source > (VDD + 0.3) for non-5V tolerant pins only.

9: Digital 5V tolerant pins do not have an internal high side diode to VDD, and therefore, cannot tolerate any "positive" input injection current.

10: Injection currents > | 0 | can affect the ADC results by approximately 4 to 6 counts (i.e., VIH Source > (VDD + 0.3) or VIL source < (VSS - 0.3)).

11: Any number and/or combination of I/O pins not excluded under IICL or IICH conditions are permitted provided the "absolute instantaneous" sum of the input injection currents from all pins do not exceed the specified limit. If **Note 7**, IICL = (((Vss - 0.3) - VIL source) / Rs). If **Note 8**, IICH = ((IICH source - (VDD + 0.3)) / RS). RS = Resistance between input source voltage and device pin. If (VSS - 0.3) ≤ VSOURCE ≤ (VDD + 0.3), injection current = 0.

TABLE 31-9: DC CHARACTERISTICS: I/O PIN OUTPUT SPECIFICATIONS

DC CHARACTERISTICS			Standard Operating Conditions: 2.3V to 3.6V (unless otherwise stated) Operating temperature -40°C ≤ TA ≤ +85°C for Industrial -40°C ≤ TA ≤ +105°C for V-temp				
Param.	**Symbol**	**Characteristic**	**Min.**	**Typ.**	**Max.**	**Units**	**Conditions**
DO10	VOL	**Output Low Voltage** I/O Pins: 4x Sink Driver Pins - All I/O output pins not defined as 8x Sink Driver pins	—	—	0.4	V	IOL ≤ 10 mA, VDD = 3.3V
		Output Low Voltage I/O Pins: 8x Sink Driver Pins - RC15	—	—	0.4	V	IOL ≤ 15 mA, VDD = 3.3V
DO20	VOH	**Output High Voltage** I/O Pins: 4x Source Driver Pins - All I/O output pins not defined as 8x Source Driver pins	2.4	—	—	V	IOH ≥ -10 mA, VDD = 3.3V
		Output High Voltage I/O Pins: 8x Source Driver Pins - RC15	2.4	—	—	V	IOH ≥ -15 mA, VDD = 3.3V
DO20A	VOH1	**Output High Voltage** I/O Pins: 4x Source Driver Pins - All I/O output pins not defined as 8x Sink Driver pins	1.5(1)	—	—	V	IOH ≥ -14 mA, VDD = 3.3V
			2.0(1)	—	—		IOH ≥ -12 mA, VDD = 3.3V
			3.0(1)	—	—		IOH ≥ -7 mA, VDD = 3.3V
		Output High Voltage I/O Pins: 8x Source Driver Pins - RC15	1.5(1)	—	—	V	IOH ≥ -22 mA, VDD = 3.3V
			2.0(1)	—	—		IOH ≥ -18 mA, VDD = 3.3V
			3.0(1)	—	—		IOH ≥ -10 mA, VDD = 3.3V

Note 1: Parameters are characterized, but not tested.
2: This driver pin only applies to devices with less than 64 pins.
3: This driver pin only applies to devices with 64 pins.

TABLE 31-10: ELECTRICAL CHARACTERISTICS: BOR

DC CHARACTERISTICS			Standard Operating Conditions: 2.3V to 3.6V (unless otherwise stated) Operating temperature -40°C ≤ TA ≤ +85°C for Industrial -40°C ≤ TA ≤ +105°C for V-Temp				
Param. No.	**Symbol**	**Characteristics**	**Min.(1)**	**Typical**	**Max.**	**Units**	**Conditions**
BO10	VBOR	BOR Event on VDD transition high-to-low (**Note 2**)	2.0	—	2.3	V	—

Note 1: Parameters are for design guidance only and are not tested in manufacturing.
2: Overall functional device operation at VBORMIN < VDD < VDDMIN is tested, but not characterized. All device Analog modules, such as ADC, etc., will function, but with degraded performance below VDDMIN.

© 2009-2013 Microchip Technology Inc.

TABLE 31-11: DC CHARACTERISTICS: PROGRAM MEMORY

DC CHARACTERISTICS			Standard Operating Conditions: 2.3V to 3.6V (unless otherwise stated) Operating temperature -40°C ≤ TA ≤ +85°C for Industrial -40°C ≤ TA ≤ +105°C for V-Temp				
Param. No.	**Symbol**	**Characteristics**	**Min.**	**Typical(1)**	**Max.**	**Units**	**Conditions**
		Program Flash Memory(3)					
D130	EP	Cell Endurance	1000	—	—	E/W	—
D130a	EP	Cell Endurance	20,000	—	—	E/W	See **Note 4**
D131	VPR	VDD for Read	2.3	—	3.6	V	—
D132	VPEW	VDD for Erase or Write	3.0	—	3.6	V	—
D132a	VPEW	VDD for Erase or Write	2.3	—	3.6	V	See **Note 4**
D134	TRETD	Characteristic Retention	20	—	—	Year	Provided no other specifications are violated
D135	IDDP	Supply Current during Programming	—	10	—	mA	—
	TWW	Word Write Cycle Time	20	—	40	μs	—
D136	TRW	Row Write Cycle Time(2)	3	4.5	—	ms	—
D137	TPE	Page Erase Cycle Time	20	—	—	ms	—
	TCE	Chip Erase Cycle Time	80	—	—	ms	—

Note 1: Data in “Typical” column is at 3.3V, 25°C unless otherwise stated.

2: The minimum SYSCLK for row programming is 4 MHz. Care should be taken to minimize bus activities during row programming, such as suspending any memory-to-memory DMA operations. If heavy bus loads are expected, selecting Bus Matrix Arbitration mode 2 (rotating priority) may be necessary. The default Arbitration mode is mode 1 (CPU has lowest priority).

3: Refer to *“PIC32 Flash Programming Specification”* (DS60001145) for operating conditions during programming and erase cycles.

4: This parameter only applies to PIC32MX534/564/664/764 devices.

TABLE 31-12: PROGRAM FLASH MEMORY WAIT STATE CHARACTERISTICS

DC CHARACTERISTICS	Standard Operating Conditions: 2.3V to 3.6V (unless otherwise stated) Operating temperature -40°C ≤ TA ≤ +85°C for Industrial -40°C ≤ TA ≤ +105°C for V-Temp		
Required Flash Wait States	**SYSCLK**	**Units**	**Comments**
0 Wait State	0 to 30	MHz	—
1 Wait State	31 to 60		
2 Wait States	61 to 80		

TABLE 31-13: COMPARATOR SPECIFICATIONS

DC CHARACTERISTICS			Standard Operating Conditions (see Note 3): 2.3V to 3.6V (unless otherwise stated) Operating temperature -40°C ≤ TA ≤ +85°C for Industrial -40°C ≤ TA ≤ +105°C for V-Temp				
Param. No.	**Symbol**	**Characteristics**	**Min.**	**Typical**	**Max.**	**Units**	**Comments**
D300	VIOFF	Input Offset Voltage	—	±7.5	±25	mV	AVDD = VDD, AVSS = VSS
D301	VICM	Input Common Mode Voltage	0	—	VDD	V	AVDD = VDD, AVSS = VSS **(Note 2)**
D302	CMRR	Common Mode Rejection Ratio	55	—	—	dB	Max VICM = (VDD - 1)V **(Note 2)**
D303	TRESP	Response Time	—	150	400	ns	AVDD = VDD, AVSS = VSS **(Notes 1, 2)**
D304	ON2OV	Comparator Enabled to Output Valid	—	—	10	µs	Comparator module is configured before setting the comparator ON bit **(Note 2)**
D305	IVREF	Internal Voltage Reference	0.57	0.6	0.63	V	For devices without BGSEL<1:0>
			1.14	1.2	1.26	V	BGSEL<1:0> = 00
			0.57	0.6	0.63	V	BGSEL<1:0> = 01

Note 1: Response time measured with one comparator input at (VDD – 1.5)/2, while the other input transitions from VSS to VDD.

2: These parameters are characterized but not tested.

3: The Comparator module is functional at VBORMIN < VDD < VDDMIN, but with degraded performance. Unless otherwise stated, module functionality is tested, but not characterized.

© 2009-2013 Microchip Technology Inc.

TABLE 31-14: VOLTAGE REFERENCE SPECIFICATIONS

DC CHARACTERISTICS			Standard Operating Conditions: 2.3V to 3.6V (unless otherwise stated) Operating temperature -40°C ≤ TA ≤ +85°C for Industrial -40°C ≤ TA ≤ +105°C for V-Temp				
Param. No.	**Symbol**	**Characteristics**	**Min.**	**Typical**	**Max.**	**Units**	**Comments**
D310	VRES	Resolution	VDD/24	—	VDD/32	LSb	—
D311	VRAA	Absolute Accuracy	—	—	1/2	LSb	—
D312	TSET	Settling Time(1)	—	—	10	μs	—
D313	VIREF	Internal Voltage Reference	—	0.6	—	V	—

Note 1: Settling time measured while CVRR = 1 and CVR<3:0> transitions from ‘0000’ to ‘1111’. This parameter is characterized, but not tested in manufacturing.

TABLE 31-15: INTERNAL VOLTAGE REGULATOR SPECIFICATIONS

DC CHARACTERISTICS			Standard Operating Conditions: 2.3V to 3.6V (unless otherwise stated) Operating temperature -40°C ≤ TA ≤ +85°C for Industrial -40°C ≤ TA ≤ +105°C for V-Temp				
Param. No.	**Symbol**	**Characteristics**	**Min.**	**Typical**	**Max.**	**Units**	**Comments**
D321	CEFC	External Filter Capacitor Value	8	10	—	μF	Capacitor must be low series resistance (1 ohm)
D322	TPWRT	Power-up Timer Period	—	64	—	ms	—

31.2 AC Characteristics and Timing Parameters

The information contained in this section defines PIC32MX5XX/6XX/7XX AC characteristics and timing parameters.

FIGURE 31-1: LOAD CONDITIONS FOR DEVICE TIMING SPECIFICATIONS

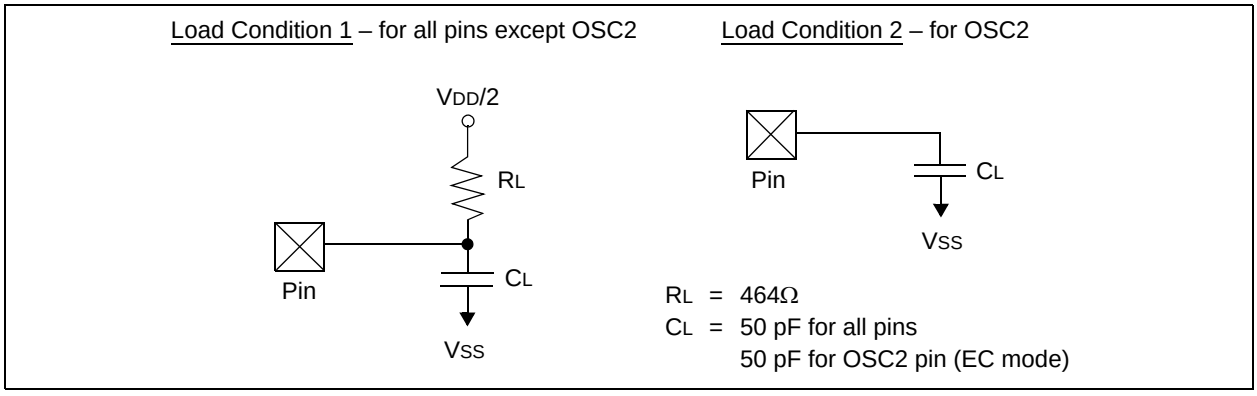

TABLE 31-16: CAPACITIVE LOADING REQUIREMENTS ON OUTPUT PINS

AC CHARACTERISTICS			Standard Operating Conditions: 2.3V to 3.6V (unless otherwise stated) Operating temperature -40°C ≤ TA ≤ +85°C for Industrial -40°C ≤ TA ≤ +105°C for V-Temp				
Param. No.	**Symbol**	**Characteristics**	**Min.**	**Typical(1)**	**Max.**	**Units**	**Conditions**
DO56	CIO	All I/O pins and OSC2	—	—	50	pF	EC mode
DO58	CB	SCLx, SDAx	—	—	400	pF	In I²C™ mode

Note 1: Data in “Typical” column is at 3.3V, 25°C unless otherwise stated. Parameters are for design guidance only and are not tested.

FIGURE 31-2: EXTERNAL CLOCK TIMING

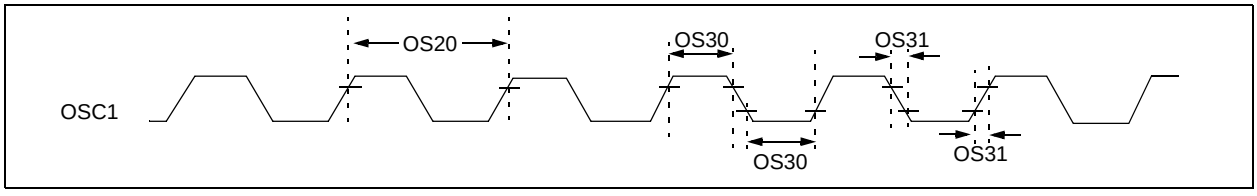

© 2009-2013 Microchip Technology Inc.

TABLE 31-17: EXTERNAL CLOCK TIMING REQUIREMENTS

AC CHARACTERISTICS			Standard Operating Conditions: 2.3V to 3.6V (unless otherwise stated) Operating temperature -40°C ≤ TA ≤ +85°C for Industrial -40°C ≤ TA ≤ +105°C for V-Temp				
Param. No.	**Symbol**	**Characteristics**	**Min.**	**Typical(1)**	**Max.**	**Units**	**Conditions**
OS10	FOSC	External CLKI Frequency (External clocks only allowed in EC and ECPLL modes)	DC 4	— —	50 50	MHz MHz	EC **(Note 4)** ECPLL **(Note 3)**
OS11		Oscillator Crystal Frequency	3	—	10	MHz	XT **(Note 4)**
OS12			4	—	10	MHz	XTPLL **(Notes 3,4)**
OS13			10	—	25	MHz	HS **(Note 5)**
OS14			10	—	25	MHz	HSPLL **(Notes 3,4)**
OS15			32	32.768	100	kHz	SOSC **(Note 4)**
OS20	TOSC	TOSC = 1/FOSC = TCY(2)	—	—	—	—	See parameter OS10 for FOSC value
OS30	TOSL, TOSH	External Clock In (OSC1) High or Low Time	0.45 x TOSC	—	—	ns	EC **(Note 4)**
OS31	TOSR, TOSF	External Clock In (OSC1) Rise or Fall Time	—	—	0.05 x TOSC	ns	EC **(Note 4)**
OS40	TOST	Oscillator Start-up Timer Period (Only applies to HS, HSPLL, XT, XTPLL and SOSC Clock Oscillator modes)	—	1024	—	TOSC	**(Note 4)**
OS41	TFSCM	Primary Clock Fail Safe Time-out Period	—	2	—	ms	**(Note 4)**
OS42	GM	External Oscillator Transconductance	—	12	—	mA/V	VDD = 3.3V, TA = +25°C **(Note 4)**

Note 1: Data in “Typical” column is at 3.3V, 25°C unless otherwise stated. Parameters are characterized but are not tested.

2: Instruction cycle period (TCY) equals the input oscillator time base period. All specified values are based on characterization data for that particular oscillator type under standard operating conditions with the device executing code. Exceeding these specified limits may result in an unstable oscillator operation and/or higher than expected current consumption. All devices are tested to operate at “min.” values with an external clock applied to the OSC1/CLKI pin.

3: PLL input requirements: 4 MHz ≤ FPLLIN ≤ 5 MHz (use PLL prescaler to reduce FOSC). This parameter is characterized, but is only tested at 10 MHz at manufacturing.

4: This parameter is characterized, but not tested in manufacturing.

TABLE 31-18: PLL CLOCK TIMING SPECIFICATIONS (V_{DD} = 2.3V TO 3.6V)

AC CHARACTERISTICS			Standard Operating Conditions: 2.3V to 3.6V (unless otherwise stated) Operating temperature -40°C ≤ TA ≤ +85°C for Industrial -40°C ≤ TA ≤ +105°C for V-Temp				
Param. No.	**Symbol**	**Characteristics(1)**	**Min.**	**Typical**	**Max.**	**Units**	**Conditions**
OS50	FPLLI	PLL Voltage Controlled Oscillator (VCO) Input Frequency Range	3.92	—	5	MHz	ECPLL, HSPLL, XTPLL, FRCPLL modes
OS51	FSYS	On-Chip VCO System Frequency	60	—	120	MHz	—
OS52	TLOCK	PLL Start-up Time (Lock Time)	—	—	2	ms	—
OS53	DCLK	CLKO Stability(2) (Period Jitter or Cumulative)	-0.25	—	+0.25	%	Measured over 100 ms period

Note 1: These parameters are characterized, but not tested in manufacturing.

2: This jitter specification is based on clock-cycle by clock-cycle measurements. To get the effective jitter for individual time-bases on communication clocks, use the following formula:

$$EffectiveJitter = \frac{D_{CLK}}{\sqrt{\frac{SYSCLK}{CommunicationClock}}}$$

For example, if SYSCLK = 80 MHz and SPI bit rate = 20 MHz, the effective jitter is as follows:

$$EffectiveJitter = \frac{D_{CLK}}{\sqrt{\frac{80}{20}}} = \frac{D_{CLK}}{2}$$

TABLE 31-19: INTERNAL FRC ACCURACY

AC CHARACTERISTICS		Standard Operating Conditions: 2.3V to 3.6V (unless otherwise stated) Operating temperature -40°C ≤ TA ≤ +85°C for Industrial -40°C ≤ TA ≤ +105°C for V-Temp				
Param. No.	**Characteristics**	**Min.**	**Typical**	**Max.**	**Units**	**Conditions**
Internal FRC Accuracy @ 8.00 MHz(1) for PIC32MX575/675/695/775/795 Family Devices						
F20a	FRC	-2	—	+2	%	—
Internal FRC Accuracy @ 8.00 MHz(1) for PIC32MX534/564/664/764 Family Devices						
F20b	FRC	-0.9	—	+0.9	%	—

Note 1: Frequency calibrated at 25°C and 3.3V. The TUN bits can be used to compensate for temperature drift.

© 2009-2013 Microchip Technology Inc.

TABLE 31-20: INTERNAL RC ACCURACY

AC CHARACTERISTICS		Standard Operating Conditions: 2.3V to 3.6V (unless otherwise stated) Operating temperature -40°C ≤ TA ≤ +85°C for Industrial -40°C ≤ TA ≤ +105°C for V-Temp				
Param. No.	**Characteristics**	**Min.**	**Typical**	**Max.**	**Units**	**Conditions**
LPRC @ 31.25 kHz(1)						
F21	LPRC	-15	—	+15	%	—

Note 1: Change of LPRC frequency as VDD changes.

FIGURE 31-3: I/O TIMING CHARACTERISTICS

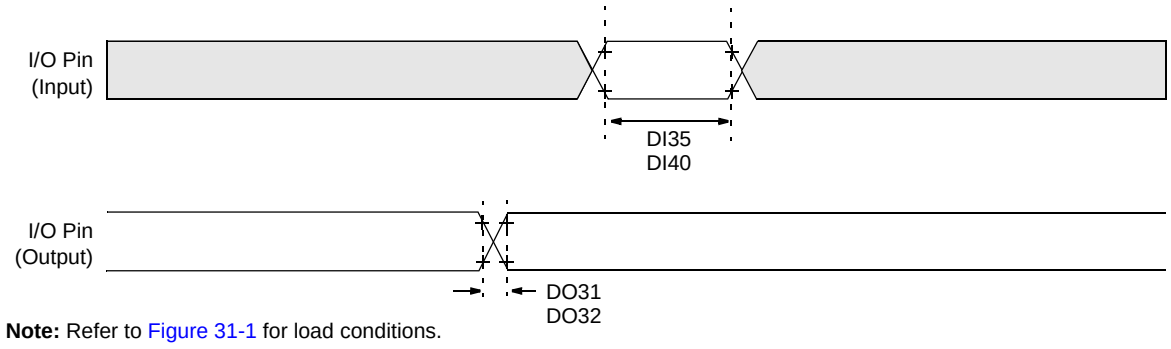

Note: Refer to Figure 31-1 for load conditions.

TABLE 31-21: I/O TIMING REQUIREMENTS

AC CHARACTERISTICS		Standard Operating Conditions: 2.3V to 3.6V (unless otherwise stated) Operating temperature -40°C ≤ TA ≤ +85°C for Industrial -40°C ≤ TA ≤ +105°C for V-Temp					
Param. No.	**Symbol**	**Characteristics(2)**	**Min.**	**Typical(1)**	**Max.**	**Units**	**Conditions**
DO31	TIOR	Port Output Rise Time	—	5	15	ns	VDD < 2.5V
			—	5	10	ns	VDD > 2.5V
DO32	TIOF	Port Output Fall Time	—	5	15	ns	VDD < 2.5V
			—	5	10	ns	VDD > 2.5V
DI35	TINP	INTx Pin High or Low Time	10	—	—	ns	—
DI40	TRBP	CNx High or Low Time (input)	2	—	—	TSYSCLK	—

Note 1: Data in “Typical” column is at 3.3V, 25°C unless otherwise stated.

2: This parameter is characterized, but not tested in manufacturing.

FIGURE 31-4: POWER-ON RESET TIMING CHARACTERISTICS

Internal Voltage Regulator Enabled
Clock Sources = (FRC, FRCDIV, FRCDIV16, FRCPLL, EC, ECPLL and LPRC)

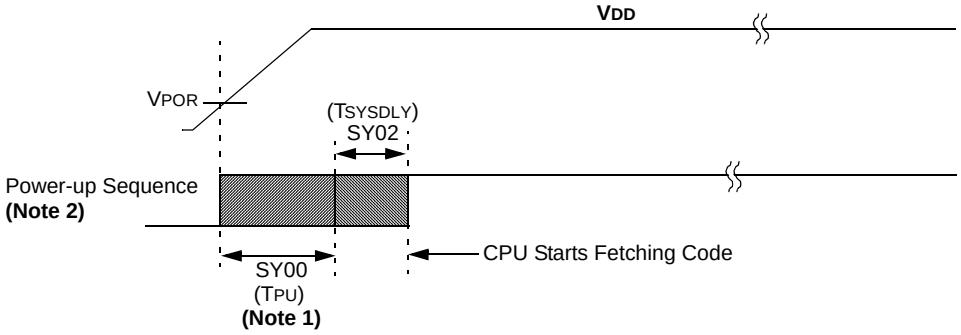

Internal Voltage Regulator Enabled
Clock Sources = (HS, HSPLL, XT, XTPLL and SOSC)

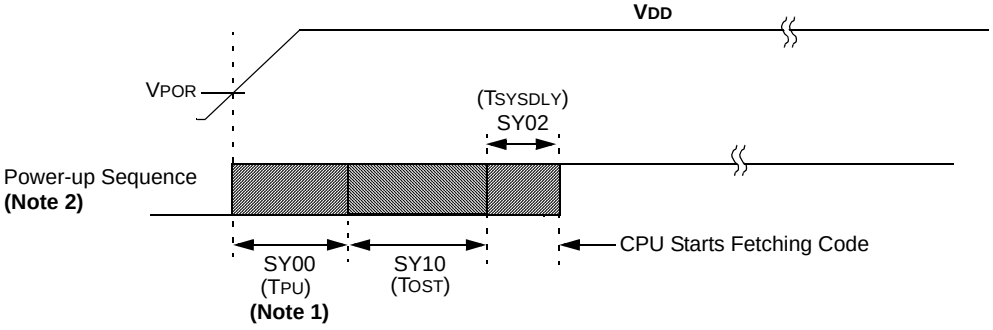

Note 1: The power-up period will be extended if the power-up sequence completes before the device exits from BOR ($V_{DD} < V_{DDMIN}$).

2: Includes interval voltage regulator stabilization delay.

© 2009-2013 Microchip Technology Inc.

FIGURE 31-5: EXTERNAL RESET TIMING CHARACTERISTICS

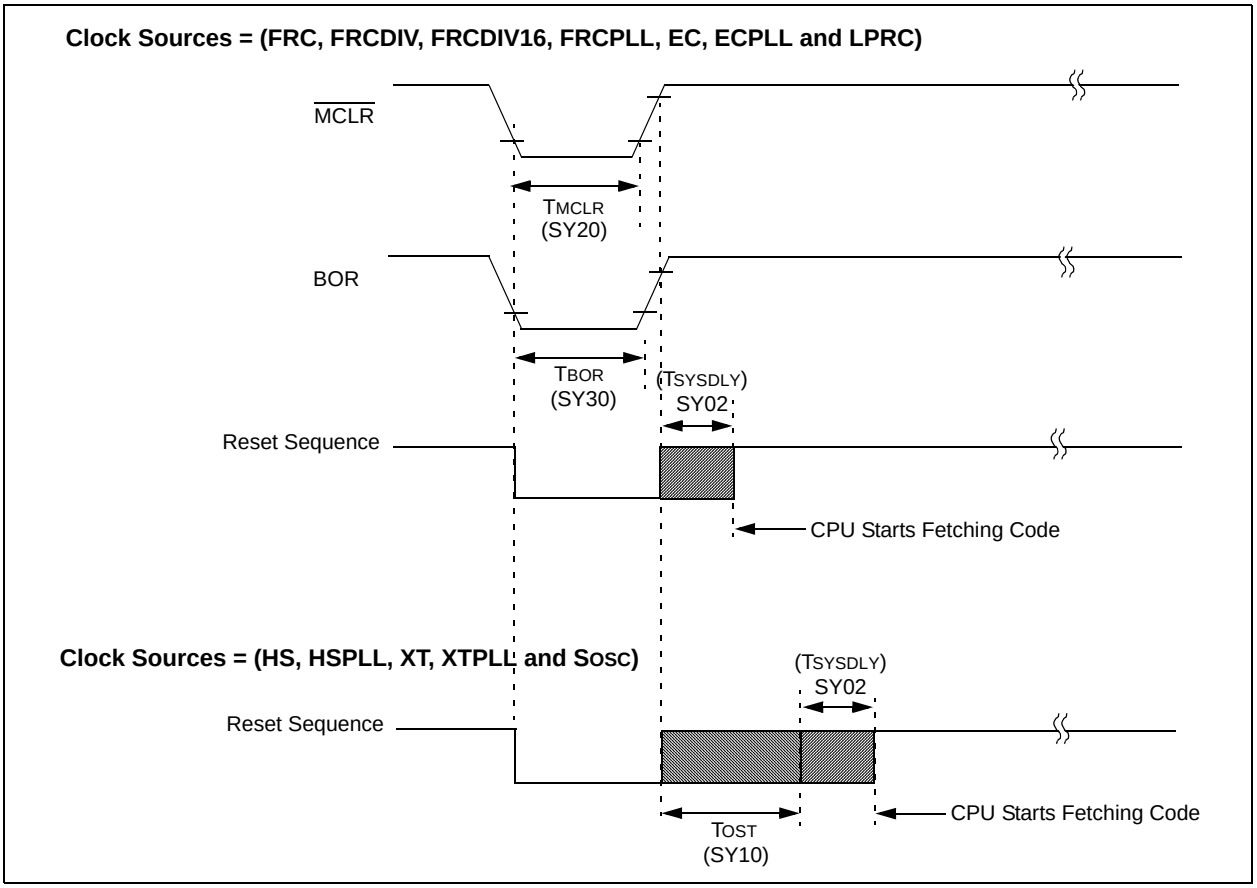

TABLE 31-22: RESETS TIMING

AC CHARACTERISTICS			Standard Operating Conditions: 2.3V to 3.6V (unless otherwise stated) Operating temperature -40°C ≤ TA ≤ +85°C for Industrial -40°C ≤ TA ≤ +105°C for V-Temp				
Param. No.	**Symbol**	**Characteristics(1)**	**Min.**	**Typical(2)**	**Max.**	**Units**	**Conditions**
SY00	TPU	Power-up Period Internal Voltage Regulator Enabled	—	400	600	μs	-40°C to +85°C
SY02	TSYSDLY	System Delay Period: Time Required to Reload Device Configuration Fuses plus SYSCLK Delay before First instruction is Fetched.	—	1 μs + 8 SYSCLK cycles	—	—	-40°C to +85°C
SY20	TMCLR	$\overline{\text{MCLR}}$ Pulse Width (low)	—	2	—	μs	-40°C to +85°C
SY30	TBOR	BOR Pulse Width (low)	—	1	—	μs	-40°C to +85°C

Note 1: These parameters are characterized, but not tested in manufacturing.
2: Data in “Typ” column is at 3.3V, 25°C unless otherwise stated. Characterized by design but not tested.

FIGURE 31-6: TIMER1, 2, 3, 4, 5 EXTERNAL CLOCK TIMING CHARACTERISTICS

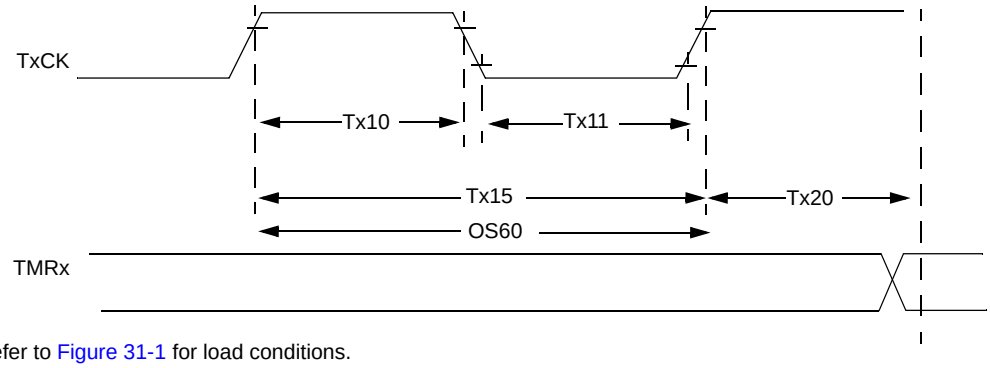

Note: Refer to Figure 31-1 for load conditions.

TABLE 31-23: TIMER1 EXTERNAL CLOCK TIMING REQUIREMENTS(1)

AC CHARACTERISTICS				Standard Operating Conditions: 2.3V to 3.6V (unless otherwise stated) Operating temperature -40°C ≤ TA ≤ +85°C for Industrial -40°C ≤ TA ≤ +105°C for V-Temp				
Param. No.	**Symbol**	**Characteristics(2)**		**Min.**	**Typical**	**Max.**	**Units**	**Conditions**
TA10	TTXH	TxCK High Time	Synchronous, with prescaler	[(12.5 ns or 1 TPB)/N] + 25 ns	—	—	ns	Must also meet parameter TA15
			Asynchronous, with prescaler	10	—	—	ns	—
TA11	TTXL	TxCK Low Time	Synchronous, with prescaler	[(12.5 ns or 1 TPB)/N] + 25 ns	—	—	ns	Must also meet parameter TA15
			Asynchronous, with prescaler	10	—	—	ns	—
TA15	TTXP	TxCK Input Period	Synchronous, with prescaler	[(Greater of 25 ns or 2 TPB)/N] + 30 ns	—	—	ns	VDD > 2.7V
				[(Greater of 25 ns or 2 TPB)/N] + 50 ns	—	—	ns	VDD < 2.7V
			Asynchronous, with prescaler	20	—	—	ns	VDD > 2.7V **(Note 3)**
				50	—	—	ns	VDD < 2.7V **(Note 3)**
OS60	FT1	SOSC1/T1CK Oscillator Input Frequency Range (oscillator enabled by setting TCS bit (T1CON<1>))		32	—	100	kHz	—
TA20	TCKEXTMRL	Delay from External TxCK Clock Edge to Timer Increment		—	—	1	TPB	—

Note 1: Timer1 is a Type A.

2: This parameter is characterized, but not tested in manufacturing.

3: N = Prescale Value (1, 8, 64, 256).

© 2009-2013 Microchip Technology Inc.

TABLE 31-24: TIMER2, 3, 4, 5 EXTERNAL CLOCK TIMING REQUIREMENTS

AC CHARACTERISTICS				Standard Operating Conditions: 2.3V to 3.6V (unless otherwise stated) Operating temperature -40°C ≤ TA ≤ +85°C for Industrial -40°C ≤ TA ≤ +105°C for V-Temp				
Param. No.	**Symbol**	**Characteristics(1)**		**Min.**	**Max.**	**Units**	**Conditions**	
TB10	TTXH	TxCK High Time	Synchronous, with prescaler	[(12.5 ns or 1 TPB)/N] + 25 ns	—	ns	Must also meet parameter TB15	N = prescale value (1, 2, 4, 8, 16, 32, 64, 256)
TB11	TTXL	TxCK Low Time	Synchronous, with prescaler	[(12.5 ns or 1 TPB)/N] + 25 ns	—	ns	Must also meet parameter TB15	
TB15	TTXP	TxCK Input Period	Synchronous, with prescaler	[(Greater of [(25 ns or 2 TPB)/N] + 30 ns	—	ns	VDD > 2.7V	
				[(Greater of [(25 ns or 2 TPB)/N] + 50 ns	—	ns	VDD < 2.7V	
TB20	TCKEXTMRL	Delay from External TxCK Clock Edge to Timer Increment		—	1	TPB	—	

Note 1: These parameters are characterized, but not tested in manufacturing.

FIGURE 31-7: INPUT CAPTURE (CAPx) TIMING CHARACTERISTICS

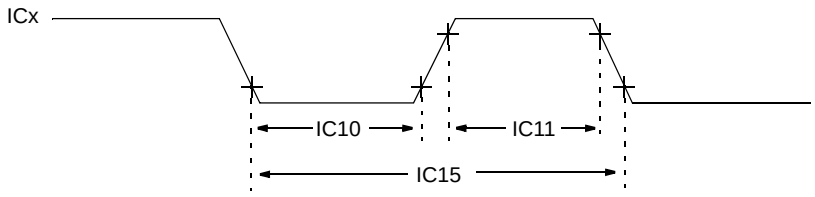

Note: Refer to Figure 31-1 for load conditions.

TABLE 31-25: INPUT CAPTURE MODULE TIMING REQUIREMENTS

AC CHARACTERISTICS			Standard Operating Conditions: 2.3V to 3.6V (unless otherwise stated) Operating temperature -40°C ≤ TA ≤ +85°C for Industrial -40°C ≤ TA ≤ +105°C for V-Temp				
Param. No.	**Symbol**	**Characteristics(1)**	**Min.**	**Max.**	**Units**	**Conditions**	
IC10	TccL	ICx Input Low Time	[(12.5 ns or 1 TPB)/N] + 25 ns	—	ns	Must also meet parameter IC15.	N = prescale value (1, 4, 16)
IC11	TccH	ICx Input High Time	[(12.5 ns or 1 TPB)/N] + 25 ns	—	ns	Must also meet parameter IC15.	
IC15	TccP	ICx Input Period	[(25 ns or 2 TPB)/N] + 50 ns	—	ns	—	

Note 1: These parameters are characterized, but not tested in manufacturing.

FIGURE 31-8: OUTPUT COMPARE MODULE (OCx) TIMING CHARACTERISTICS

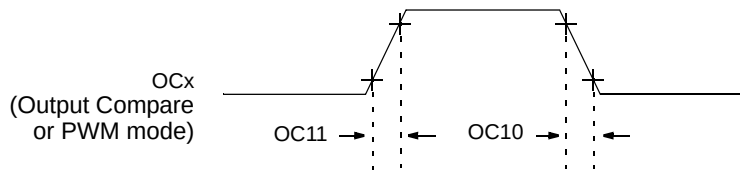

Note: Refer to Figure 31-1 for load conditions.

TABLE 31-26: OUTPUT COMPARE MODULE TIMING REQUIREMENTS

AC CHARACTERISTICS			Standard Operating Conditions: 2.3V to 3.6V (unless otherwise stated) Operating temperature -40°C ≤ TA ≤ +85°C for Industrial -40°C ≤ TA ≤ +105°C for V-Temp				
Param. No.	**Symbol**	**Characteristics(1)**	**Min.**	**Typical(2)**	**Max.**	**Units**	**Conditions**
OC10	TccF	OCx Output Fall Time	—	—	—	ns	See parameter DO32
OC11	TccR	OCx Output Rise Time	—	—	—	ns	See parameter DO31

Note 1: These parameters are characterized, but not tested in manufacturing.

2: Data in “Typical” column is at 3.3V, 25°C unless otherwise stated. Parameters are for design guidance only and are not tested.

© 2009-2013 Microchip Technology Inc.

FIGURE 31-9: OCx/PWM MODULE TIMING CHARACTERISTICS

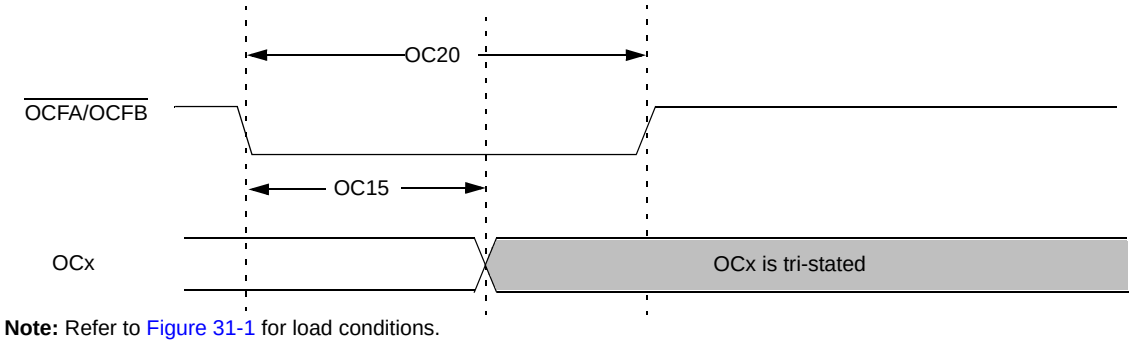

Note: Refer to Figure 31-1 for load conditions.

TABLE 31-27: SIMPLE OCx/PWM MODE TIMING REQUIREMENTS

AC CHARACTERISTICS			Standard Operating Conditions: 2.3V to 3.6V (unless otherwise stated) Operating temperature -40°C ≤ TA ≤ +85°C for Industrial -40°C ≤ TA ≤ +105°C for V-Temp				
Param No.	**Symbol**	**Characteristics(1)**	**Min**	**Typical(2)**	**Max**	**Units**	**Conditions**
OC15	TFD	Fault Input to PWM I/O Change	—	—	50	ns	—
OC20	TFLT	Fault Input Pulse Width	50	—	—	ns	—

Note 1: These parameters are characterized, but not tested in manufacturing.

2: Data in “Typical” column is at 3.3V, 25°C unless otherwise stated. Parameters are for design guidance only and are not tested.

FIGURE 31-10: SPIx MODULE MASTER MODE (CKE = 0) TIMING CHARACTERISTICS

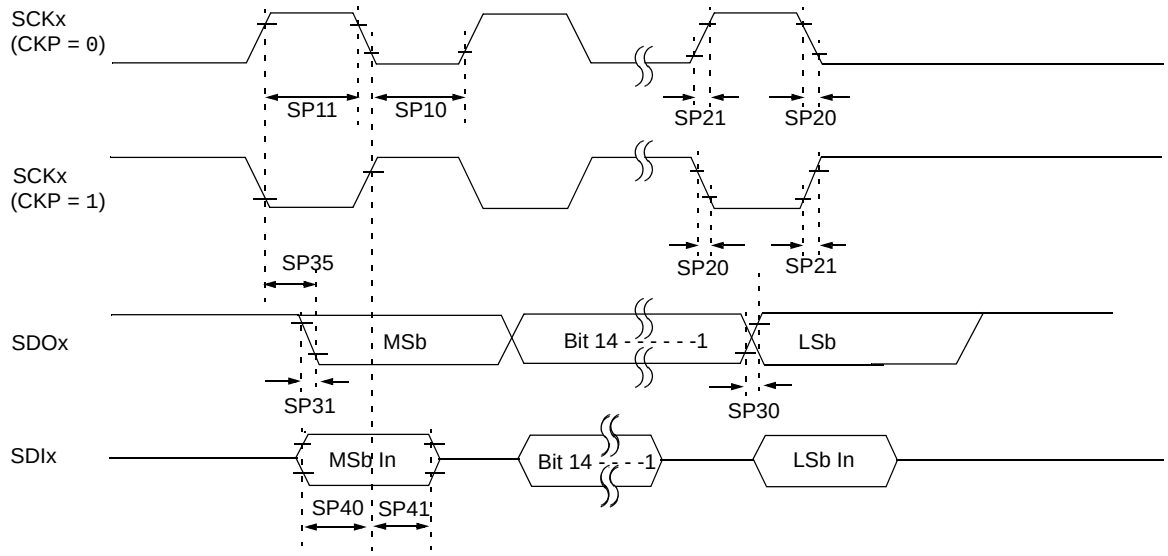

Note: Refer to Figure 31-1 for load conditions.

TABLE 31-28: SPIx MASTER MODE (CKE = 0) TIMING REQUIREMENTS

AC CHARACTERISTICS			Standard Operating Conditions: 2.3V to 3.6V (unless otherwise stated) Operating temperature -40°C ≤ TA ≤ +85°C for Industrial -40°C ≤ TA ≤ +105°C for V-Temp				
Param. No.	**Symbol**	**Characteristics(1)**	**Min.**	**Typical(2)**	**Max.**	**Units**	**Conditions**
SP10	TscL	SCKx Output Low Time(3)	Tsck/2	—	—	ns	—
SP11	TscH	SCKx Output High Time(3)	Tsck/2	—	—	ns	—
SP20	TscF	SCKx Output Fall Time(4)	—	—	—	ns	See parameter DO32
SP21	TscR	SCKx Output Rise Time(4)	—	—	—	ns	See parameter DO31
SP30	TdoF	SDOx Data Output Fall Time(4)	—	—	—	ns	See parameter DO32
SP31	TdoR	SDOx Data Output Rise Time(4)	—	—	—	ns	See parameter DO31
SP35	TscH2doV, TscL2doV	SDOx Data Output Valid after SCKx Edge	—	—	15	ns	VDD > 2.7V
			—	—	20	ns	VDD < 2.7V
SP40	TdiV2scH, TdiV2scL	Setup Time of SDIx Data Input to SCKx Edge	10	—	—	ns	—
SP41	TscH2diL, TscL2diL	Hold Time of SDIx Data Input to SCKx Edge	10	—	—	ns	—

Note 1: These parameters are characterized, but not tested in manufacturing.

2: Data in “Typical” column is at 3.3V, 25°C unless otherwise stated. Parameters are for design guidance only and are not tested.

3: The minimum clock period for SCKx is 40 ns. Therefore, the clock generated in Master mode must not violate this specification.

4: Assumes 50 pF load on all SPIx pins.

© 2009-2013 Microchip Technology Inc.

FIGURE 31-11: SPIx MODULE MASTER MODE (CKE = 1) TIMING CHARACTERISTICS

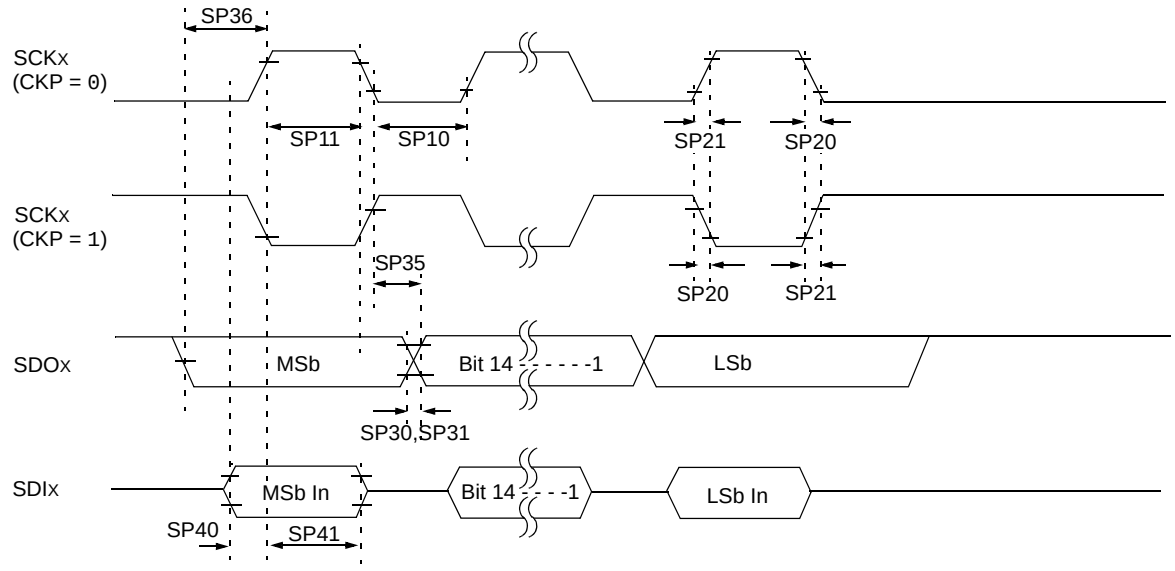

Note: Refer to Figure 31-1 for load conditions.

TABLE 31-29: SPIx MODULE MASTER MODE (CKE = 1) TIMING REQUIREMENTS

AC CHARACTERISTICS			Standard Operating Conditions: 2.3V to 3.6V (unless otherwise stated) Operating temperature -40°C ≤ TA ≤ +85°C for Industrial -40°C ≤ TA ≤ +105°C for V-Temp				
Param. No.	**Symbol**	**Characteristics(1)**	**Min.**	**Typ.(2)**	**Max.**	**Units**	**Conditions**
SP10	TscL	SCKx Output Low Time(3)	Tsck/2	—	—	ns	—
SP11	TscH	SCKx Output High Time(3)	Tsck/2	—	—	ns	—
SP20	TscF	SCKx Output Fall Time(4)	—	—	—	ns	See parameter DO32
SP21	TscR	SCKx Output Rise Time(4)	—	—	—	ns	See parameter DO31
SP30	TdoF	SDOx Data Output Fall Time(4)	—	—	—	ns	See parameter DO32
SP31	TdoR	SDOx Data Output Rise Time(4)	—	—	—	ns	See parameter DO31
SP35	TscH2doV, TscL2doV	SDOx Data Output Valid after SCKx Edge	—	—	15	ns	VDD > 2.7V
			—	—	20	ns	VDD < 2.7V
SP36	TdoV2sc, TdoV2scL	SDOx Data Output Setup to First SCKx Edge	15	—	—	ns	—
SP40	TdiV2scH, TdiV2scL	Setup Time of SDIx Data Input to SCKx Edge	15	—	—	ns	VDD > 2.7V
			20	—	—	ns	VDD < 2.7V
SP41	TscH2diL, TscL2diL	Hold Time of SDIx Data Input to SCKx Edge	15	—	—	ns	VDD > 2.7V
			20	—	—	ns	VDD < 2.7V

Note 1: These parameters are characterized, but not tested in manufacturing.

2: Data in "Typical" column is at 3.3V, 25°C unless otherwise stated. Parameters are for design guidance only and are not tested.

3: The minimum clock period for SCKx is 40 ns. Therefore, the clock generated in Master mode must not violate this specification.

4: Assumes 50 pF load on all SPIx pins.

FIGURE 31-12: SPIx MODULE SLAVE MODE (CKE = 0) TIMING CHARACTERISTICS

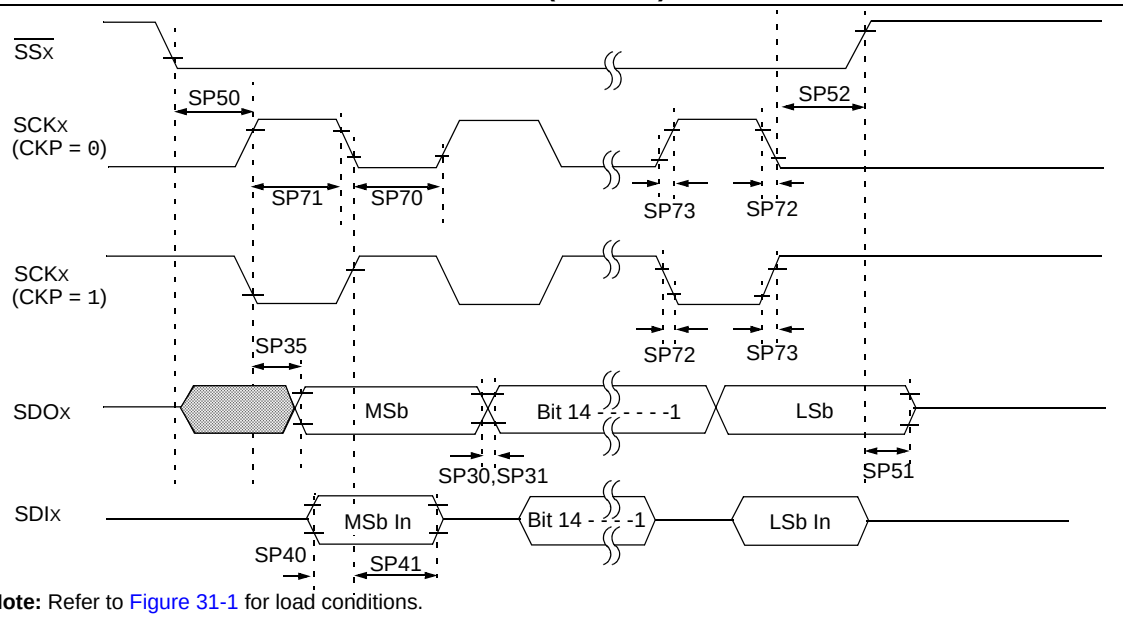

Note: Refer to Figure 31-1 for load conditions.

TABLE 31-30: SPIx MODULE SLAVE MODE (CKE = 0) TIMING REQUIREMENTS

AC CHARACTERISTICS			Standard Operating Conditions: 2.3V to 3.6V (unless otherwise stated) Operating temperature -40°C ≤ TA ≤ +85°C for Industrial -40°C ≤ TA ≤ +105°C for V-Temp				
Param. No.	**Symbol**	**Characteristics(1)**	**Min.**	**Typ.(2)**	**Max.**	**Units**	**Conditions**
SP70	TscL	SCKx Input Low Time(3)	Tsck/2	—	—	ns	—
SP71	TscH	SCKx Input High Time(3)	Tsck/2	—	—	ns	—
SP72	TscF	SCKx Input Fall Time	—	—	—	ns	See parameter DO32
SP73	TscR	SCKx Input Rise Time	—	—	—	ns	See parameter DO31
SP30	TdoF	SDOx Data Output Fall Time(4)	—	—	—	ns	See parameter DO32
SP31	TdoR	SDOx Data Output Rise Time(4)	—	—	—	ns	See parameter DO31
SP35	TscH2doV, TscL2doV	SDOx Data Output Valid after SCKx Edge	—	—	15	ns	VDD > 2.7V
			—	—	20	ns	VDD < 2.7V
SP40	TdiV2scH, TdiV2scL	Setup Time of SDIx Data Input to SCKx Edge	10	—	—	ns	—
SP41	TscH2diL, TscL2diL	Hold Time of SDIx Data Input to SCKx Edge	10	—	—	ns	—
SP50	TssL2scH, TssL2scL	$\overline{SSx}$ ↓ to SCKx ↑ or SCKx Input	175	—	—	ns	—
SP51	TssH2doZ	$\overline{SSx}$ ↑ to SDOx Output High-Impedance(3)	5	—	25	ns	—
SP52	TscH2ssH TscL2ssH	$\overline{SSx}$ after SCKx Edge	Tsck + 20	—	—	ns	—

Note 1: These parameters are characterized, but not tested in manufacturing.

2: Data in "Typical" column is at 3.3V, 25°C unless otherwise stated. Parameters are for design guidance only and are not tested.

3: The minimum clock period for SCKx is 40 ns.

4: Assumes 50 pF load on all SPIx pins.

© 2009-2013 Microchip Technology Inc.

FIGURE 31-13: SPIx MODULE SLAVE MODE (CKE = 1) TIMING CHARACTERISTICS

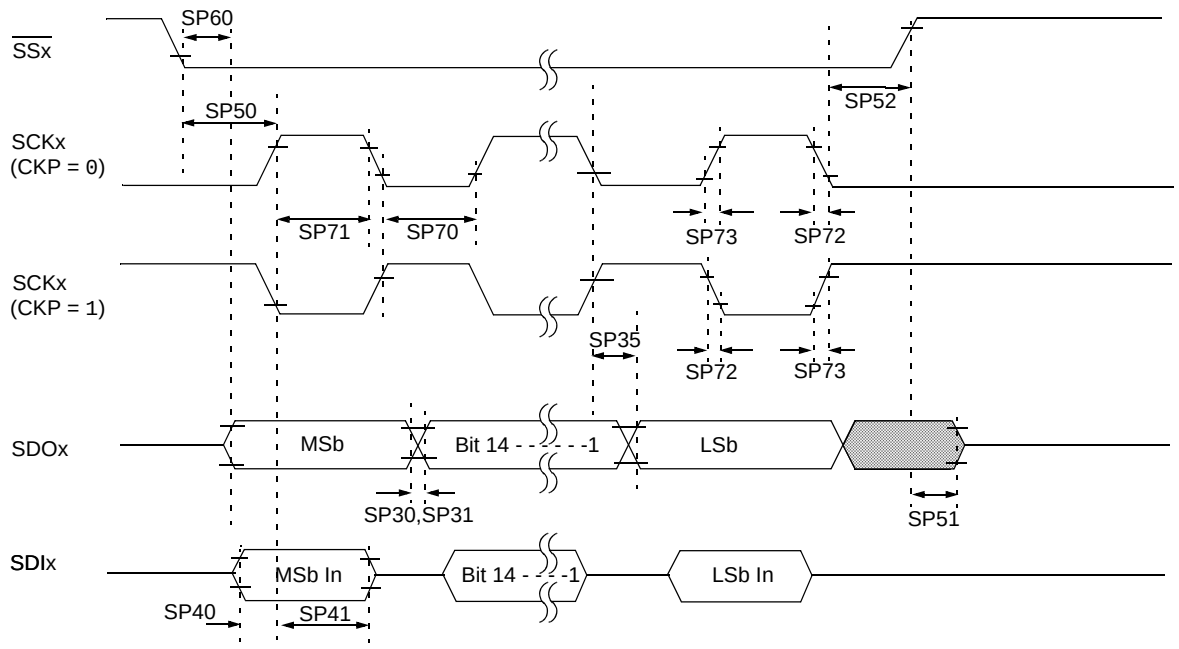

Note: Refer to Figure 31-1 for load conditions.

TABLE 31-31: SPIx MODULE SLAVE MODE (CKE = 1) TIMING REQUIREMENTS

AC CHARACTERISTICS			Standard Operating Conditions: 2.3V to 3.6V (unless otherwise stated) Operating temperature -40°C ≤ TA ≤ +85°C for Industrial -40°C ≤ TA ≤ +105°C for V-Temp				
Param. No.	**Symbol**	**Characteristics(1)**	**Min.**	**Typical(2)**	**Max.**	**Units**	**Conditions**
SP70	TscL	SCKx Input Low Time(3)	Tsck/2	—	—	ns	—
SP71	TscH	SCKx Input High Time(3)	Tsck/2	—	—	ns	—
SP72	TscF	SCKx Input Fall Time	—	5	10	ns	—
SP73	TscR	SCKx Input Rise Time	—	5	10	ns	—
SP30	TdoF	SDOx Data Output Fall Time(4)	—	—	—	ns	See parameter DO32
SP31	TdoR	SDOx Data Output Rise Time(4)	—	—	—	ns	See parameter DO31
SP35	TscH2doV, TscL2doV	SDOx Data Output Valid after SCKx Edge	—	—	20	ns	VDD > 2.7V
			—	—	30	ns	VDD < 2.7V
SP40	TdiV2scH, TdiV2scL	Setup Time of SDIx Data Input to SCKx Edge	10	—	—	ns	—
SP41	TscH2diL, TscL2diL	Hold Time of SDIx Data Input to SCKx Edge	10	—	—	ns	—
SP50	TssL2scH, TssL2scL	$\overline{SSx}$ ↓ to SCKx ↓ or SCKx ↑ Input	175	—	—	ns	—

Note 1: These parameters are characterized, but not tested in manufacturing.

2: Data in "Typical" column is at 3.3V, 25°C unless otherwise stated. Parameters are for design guidance only and are not tested.

3: The minimum clock period for SCKx is 40 ns.

4: Assumes 50 pF load on all SPIx pins.

TABLE 31-31: SPIx MODULE SLAVE MODE (CKE = 1) TIMING REQUIREMENTS (CONTINUED)

AC CHARACTERISTICS			Standard Operating Conditions: 2.3V to 3.6V (unless otherwise stated) Operating temperature -40°C ≤ TA ≤ +85°C for Industrial -40°C ≤ TA ≤ +105°C for V-Temp				
Param. No.	**Symbol**	**Characteristics(1)**	**Min.**	**Typical(2)**	**Max.**	**Units**	**Conditions**
SP51	TSSH2DOZ	$\overline{SSx}$ ↑ to SDOx Output High-Impedance(4)	5	—	25	ns	—
SP52	TSCH2SSH TSCL2SSH	$\overline{SSx}$ ↑ after SCKx Edge	TSCK + 20	—	—	ns	—
SP60	TSSL2DOV	SDOx Data Output Valid after $\overline{SSx}$ Edge	—	—	25	ns	—

Note 1: These parameters are characterized, but not tested in manufacturing.

2: Data in “Typical” column is at 3.3V, 25°C unless otherwise stated. Parameters are for design guidance only and are not tested.

3: The minimum clock period for SCKx is 40 ns.

4: Assumes 50 pF load on all SPIx pins.

© 2009-2013 Microchip Technology Inc.

FIGURE 31-14: I2Cx BUS START/STOP BITS TIMING CHARACTERISTICS (MASTER MODE)

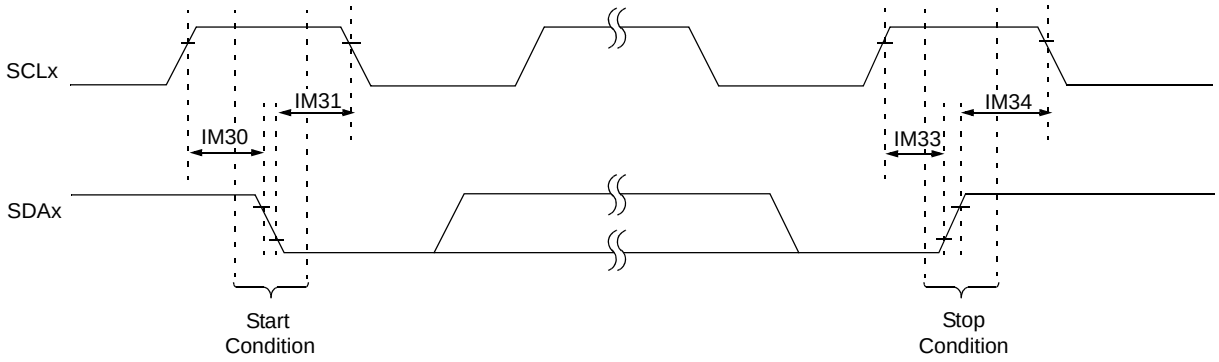

Note: Refer to Figure 31-1 for load conditions.

FIGURE 31-15: I2Cx BUS DATA TIMING CHARACTERISTICS (MASTER MODE)

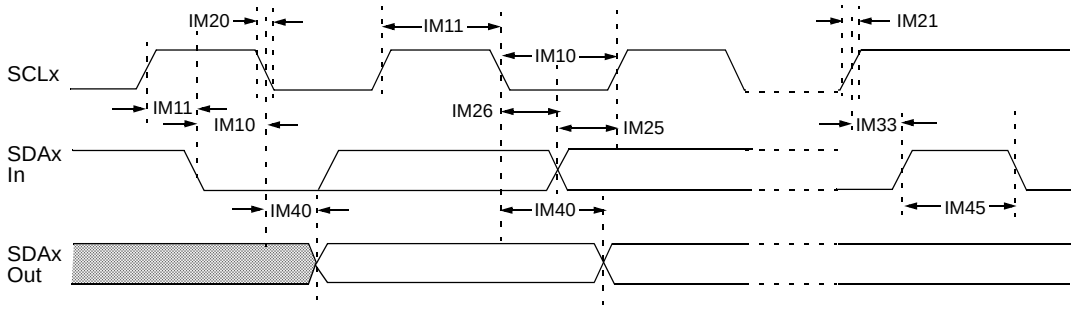

Note: Refer to Figure 31-1 for load conditions.

TABLE 31-32: I2Cx BUS DATA TIMING REQUIREMENTS (MASTER MODE)

AC CHARACTERISTICS				Standard Operating Conditions: 2.3V to 3.6V (unless otherwise stated) Operating temperature -40°C ≤ TA ≤ +85°C for Industrial -40°C ≤ TA ≤ +105°C for V-Temp			
Param. No.	**Symbol**	**Characteristics**		**Min.(1)**	**Max.**	**Units**	**Conditions**
IM10	TLO:SCL	Clock Low Time	100 kHz mode	TPB * (BRG + 2)	—	μs	—
			400 kHz mode	TPB * (BRG + 2)	—	μs	—
			1 MHz mode(2)	TPB * (BRG + 2)	—	μs	—
IM11	THI:SCL	Clock High Time	100 kHz mode	TPB * (BRG + 2)	—	μs	—
			400 kHz mode	TPB * (BRG + 2)	—	μs	—
			1 MHz mode(2)	TPB * (BRG + 2)	—	μs	—
IM20	TF:SCL	SDAx and SCLx Fall Time	100 kHz mode	—	300	ns	CB is specified to be from 10 to 400 pF
			400 kHz mode	20 + 0.1 CB	300	ns	
			1 MHz mode(2)	—	100	ns	
IM21	TR:SCL	SDAx and SCLx Rise Time	100 kHz mode	—	1000	ns	CB is specified to be from 10 to 400 pF
			400 kHz mode	20 + 0.1 CB	300	ns	
			1 MHz mode(2)	—	300	ns	
IM25	TSU:DAT	Data Input Setup Time	100 kHz mode	250	—	ns	—
			400 kHz mode	100	—	ns	
			1 MHz mode(2)	100	—	ns	
IM26	THD:DAT	Data Input Hold Time	100 kHz mode	0	—	μs	—
			400 kHz mode	0	0.9	μs	
			1 MHz mode(2)	0	0.3	μs	
IM30	TSU:STA	Start Condition Setup Time	100 kHz mode	TPB * (BRG + 2)	—	ns	Only relevant for Repeated Start condition
			400 kHz mode	TPB * (BRG + 2)	—	ns	
			1 MHz mode(2)	TPB * (BRG + 2)	—	ns	
IM31	THD:STA	Start Condition Hold Time	100 kHz mode	TPB * (BRG + 2)	—	ns	After this period, the first clock pulse is generated
			400 kHz mode	TPB * (BRG + 2)	—	ns	
			1 MHz mode(2)	TPB * (BRG + 2)	—	ns	
IM33	TSU:STO	Stop Condition Setup Time	100 kHz mode	TPB * (BRG + 2)	—	ns	—
			400 kHz mode	TPB * (BRG + 2)	—	ns	
			1 MHz mode(2)	TPB * (BRG + 2)	—	ns	
IM34	THD:STO	Stop Condition Hold Time	100 kHz mode	TPB * (BRG + 2)	—	ns	—
			400 kHz mode	TPB * (BRG + 2)	—	ns	
			1 MHz mode(2)	TPB * (BRG + 2)	—	ns	
IM40	TAA:SCL	Output Valid from Clock	100 kHz mode	—	3500	ns	—
			400 kHz mode	—	1000	ns	—
			1 MHz mode(2)	—	350	ns	—
IM45	TBF:SDA	Bus Free Time	100 kHz mode	4.7	—	μs	The amount of time the bus must be free before a new transmission can start
			400 kHz mode	1.3	—	μs	
			1 MHz mode(2)	0.5	—	μs	
IM50	CB	Bus Capacitive Loading		—	400	pF	—
IM51	TPGD	Pulse Gobbler Delay(3)		52	312	ns	—

Note 1: BRG is the value of the I^2C™ Baud Rate Generator.

2: Maximum pin capacitance = 10 pF for all I2Cx pins (only for 1 MHz mode).

© 2009-2013 Microchip Technology Inc.

FIGURE 31-16: I2Cx BUS START/STOP BITS TIMING CHARACTERISTICS (SLAVE MODE)

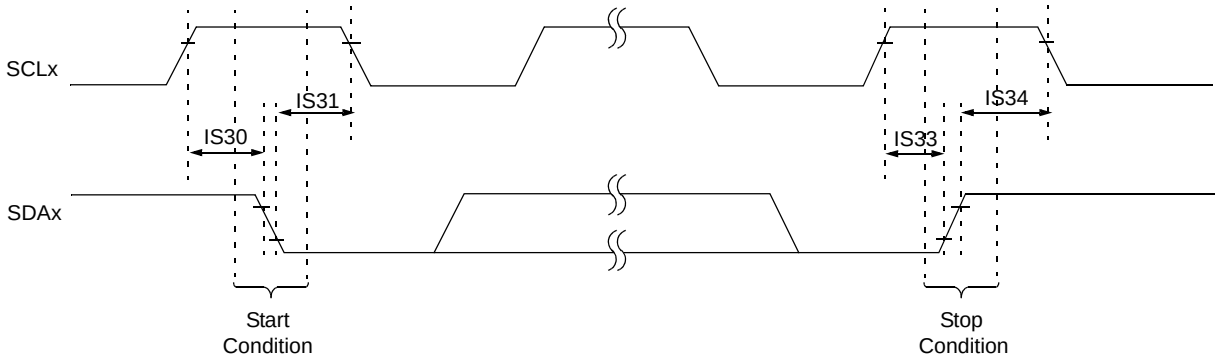

Note: Refer to Figure 31-1 for load conditions.

FIGURE 31-17: I2Cx BUS DATA TIMING CHARACTERISTICS (SLAVE MODE)

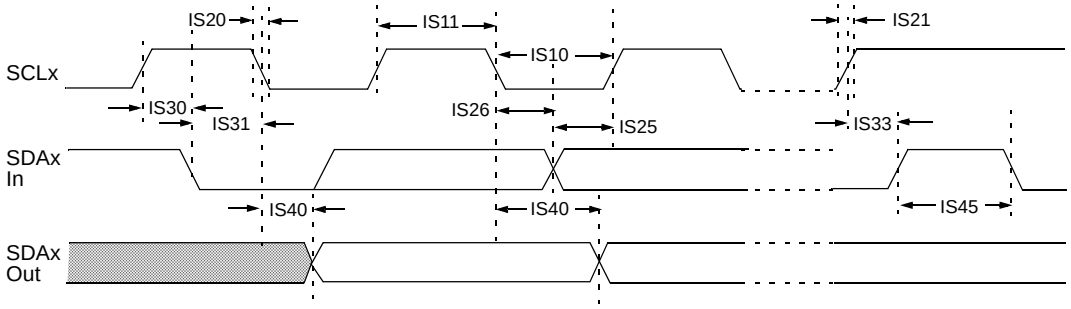

Note: Refer to Figure 31-1 for load conditions.

TABLE 31-33: I2Cx BUS DATA TIMING REQUIREMENTS (SLAVE MODE)

AC CHARACTERISTICS				Standard Operating Conditions: 2.3V to 3.6V (unless otherwise stated) Operating temperature -40°C ≤ TA ≤ +85°C for Industrial -40°C ≤ TA ≤ +105°C for V-Temp			
Param. No.	**Symbol**	**Characteristics**		**Min.**	**Max.**	**Units**	**Conditions**
IS10	TLO:SCL	Clock Low Time	100 kHz mode	4.7	—	μs	PBCLK must operate at a minimum of 800 kHz
			400 kHz mode	1.3	—	μs	PBCLK must operate at a minimum of 3.2 MHz
			1 MHz mode(1)	0.5	—	μs	—
IS11	THI:SCL	Clock High Time	100 kHz mode	4.0	—	μs	PBCLK must operate at a minimum of 800 kHz
			400 kHz mode	0.6	—	μs	PBCLK must operate at a minimum of 3.2 MHz
			1 MHz mode(1)	0.5	—	μs	—
IS20	TF:SCL	SDAx and SCLx Fall Time	100 kHz mode	—	300	ns	CB is specified to be from 10 to 400 pF
			400 kHz mode	20 + 0.1 CB	300	ns	
			1 MHz mode(1)	—	100	ns	
IS21	TR:SCL	SDAx and SCLx Rise Time	100 kHz mode	—	1000	ns	CB is specified to be from 10 to 400 pF
			400 kHz mode	20 + 0.1 CB	300	ns	
			1 MHz mode(1)	—	300	ns	
IS25	TSU:DAT	Data Input Setup Time	100 kHz mode	250	—	ns	—
			400 kHz mode	100	—	ns	
			1 MHz mode(1)	100	—	ns	
IS26	THD:DAT	Data Input Hold Time	100 kHz mode	0	—	ns	—
			400 kHz mode	0	0.9	μs	
			1 MHz mode(1)	0	0.3	μs	
IS30	TSU:STA	Start Condition Setup Time	100 kHz mode	4700	—	ns	Only relevant for Repeated Start condition
			400 kHz mode	600	—	ns	
			1 MHz mode(1)	250	—	ns	
IS31	THD:STA	Start Condition Hold Time	100 kHz mode	4000	—	ns	After this period, the first clock pulse is generated
			400 kHz mode	600	—	ns	
			1 MHz mode(1)	250	—	ns	
IS33	TSU:STO	Stop Condition Setup Time	100 kHz mode	4000	—	ns	—
			400 kHz mode	600	—	ns	
			1 MHz mode(1)	600	—	ns	
IS34	THD:STO	Stop Condition Hold Time	100 kHz mode	4000	—	ns	—
			400 kHz mode	600	—	ns	
			1 MHz mode(1)	250		ns	
IS40	TAA:SCL	Output Valid from Clock	100 kHz mode	0	3500	ns	—
			400 kHz mode	0	1000	ns	
			1 MHz mode(1)	0	350	ns	
IS45	TBF:SDA	Bus Free Time	100 kHz mode	4.7	—	μs	The amount of time the bus must be free before a new transmission can start
			400 kHz mode	1.3	—	μs	
			1 MHz mode(1)	0.5	—	μs	
IS50	CB	Bus Capacitive Loading		—	400	pF	—

Note 1: Maximum pin capacitance = 10 pF for all I2Cx pins (only for 1 MHz mode).

© 2009-2013 Microchip Technology Inc.

FIGURE 31-18: CAN MODULE I/O TIMING CHARACTERISTICS

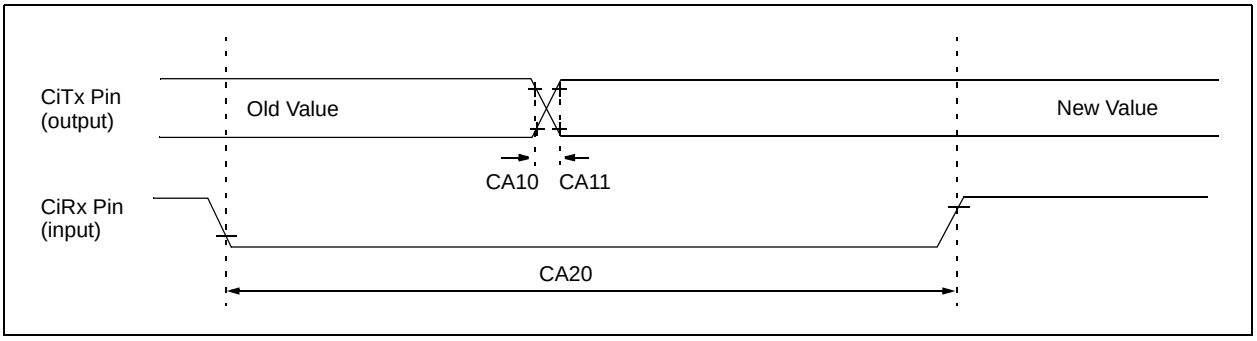

TABLE 31-34: CAN MODULE I/O TIMING REQUIREMENTS

AC CHARACTERISTICS			Standard Operating Conditions: 2.3V to 3.6V (unless otherwise stated) Operating temperature -40°C ≤ TA ≤ +85°C for Industrial -40°C ≤ TA ≤ +105°C for V-Temp				
Param No.	**Symbol**	**Characteristic(1)**	**Min**	**Typ(2)**	**Max**	**Units**	**Conditions**
CA10	TioF	Port Output Fall Time	—	—	—	ns	See parameter DO32
CA11	TioR	Port Output Rise Time	—	—	—	ns	See parameter DO31
CA20	Tcwf	Pulse Width to Trigger CAN Wake-up Filter	700	—	—	ns	—

Note 1: These parameters are characterized but not tested in manufacturing.

2: Data in “Typ” column is at 3.3V, 25°C unless otherwise stated. Parameters are for design guidance only and are not tested.

TABLE 31-35: ETHERNET MODULE SPECIFICATIONS

AC CHARACTERISTICS		Standard Operating Conditions (see Note 1): 2.9V to 3.6V (unless otherwise stated) Operating temperature -40°C ≤ TA ≤ +85°C for Industrial -40°C ≤ TA ≤ +105°C for V-Temp				
Param. No.	**Characteristic**	**Min.**	**Typical**	**Max.**	**Units**	**Conditions**
MIIM Timing Requirements						
ET1	MDC Duty Cycle	40	—	60	%	—
ET2	MDC Period	400	—	—	ns	—
ET3	MDIO Output Setup and Hold	10	—	10	ns	See Figure 31-19
ET4	MDIO Input Setup and Hold	0	—	300	ns	See Figure 31-20
MII Timing Requirements						
ET5	TX Clock Frequency	—	25	—	MHz	—
ET6	TX Clock Duty Cycle	35	—	65	%	—
ET7	ETXDx, ETEN, ETXERR Output Delay	0	—	25	ns	See Figure 31-21
ET8	RX Clock Frequency	—	25	—	MHz	—
ET9	RX Clock Duty Cycle	35	—	65	%	—
ET10	ERXDx, ERXDV, ERXERR Setup and Hold	10	—	30	ns	See Figure 31-22
RMII Timing Requirements						
ET11	Reference Clock Frequency	—	50	—	MHz	—
ET12	Reference Clock Duty Cycle	35	—	65	%	—
ET13	ETXDx, ETEN, Setup and Hold	2	—	16	ns	—
ET14	ERXDx, ERXDV, ERXERR Setup and Hold	2	—	16	ns	—

Note 1: The Ethernet module is functional at VBORMIN < VDD < 2.9V, but with degraded performance. Unless otherwise stated, module functionality is tested, but not characterized.

FIGURE 31-19: MDIO SOURCED BY THE PIC32 DEVICE

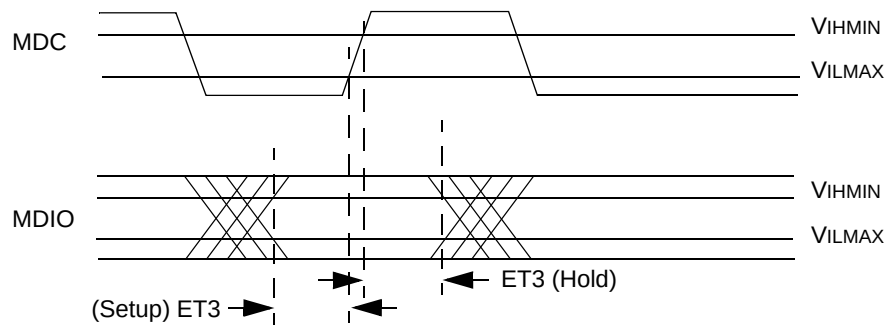

FIGURE 31-20: MDIO SOURCED BY THE PHY

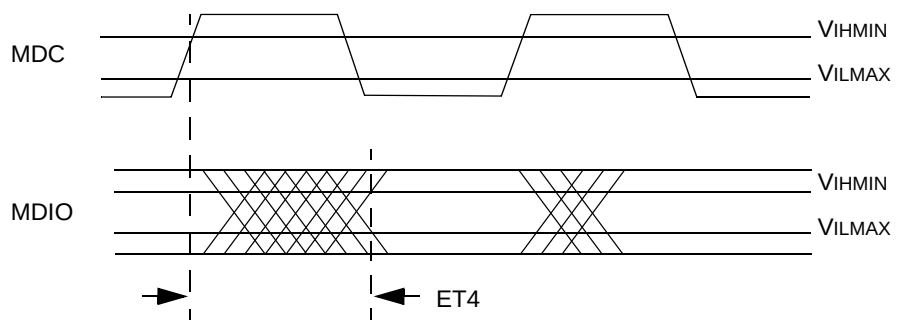

© 2009-2013 Microchip Technology Inc.

FIGURE 31-21: TRANSMIT SIGNAL TIMING RELATIONSHIPS AT THE MII

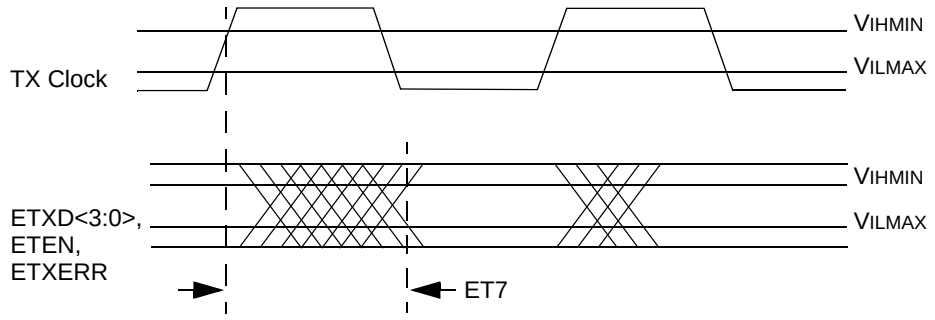

FIGURE 31-22: RECEIVE SIGNAL TIMING RELATIONSHIPS AT THE MII

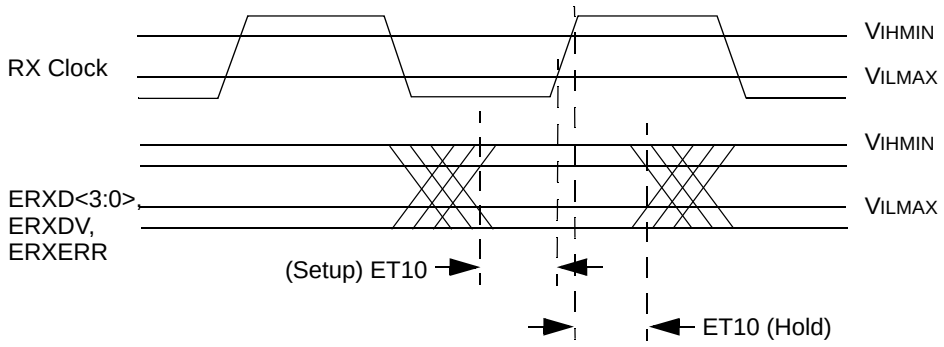

TABLE 31-36: ADC MODULE SPECIFICATIONS

AC CHARACTERISTICS			Standard Operating Conditions (see Note 5): 2.5V to 3.6V (unless otherwise stated) Operating temperature -40°C ≤ TA ≤ +85°C for Industrial -40°C ≤ TA ≤ +105°C for V-Temp				
Param. No.	**Symbol**	**Characteristics**	**Min.**	**Typical**	**Max.**	**Units**	**Conditions**
Device Supply							
AD01	AVDD	Module VDD Supply	Greater of VDD – 0.3 or 2.5	—	Lesser of VDD + 0.3 or 3.6	V	—
AD02	AVSS	Module VSS Supply	VSS	—	VSS + 0.3	V	—
Reference Inputs							
AD05 AD05a	VREFH	Reference Voltage High	AVSS + 2.0 2.5	— —	AVDD 3.6	V V	**(Note 1)** VREFH = AVDD **(Note 3)**
AD06	VREFL	Reference Voltage Low	AVSS	—	VREFH – 2.0	V	**(Note 1)**
AD07	VREF	Absolute Reference Voltage (VREFH – VREFL)	2.0	—	AVDD	V	**(Note 3)**
AD08 AD08a	IREF	Current Drain	— —	250 —	400 3	μA μA	ADC operating ADC off
Analog Input							
AD12	VINH-VINL	Full-Scale Input Span	VREFL	—	VREFH	V	—
AD13	VINL	Absolute VINL Input Voltage	AVSS – 0.3	—	AVDD/2	V	—
AD14	VIN	Absolute Input Voltage	AVSS – 0.3	—	AVDD + 0.3	V	—
AD15		Leakage Current	—	±0.001	±0.610	μA	VINL = AVSS = VREFL = 0V, AVDD = VREFH = 3.3V Source Impedance = 10 kΩ
AD17	RIN	Recommended Impedance of Analog Voltage Source	—	—	5K	Ω	**(Note 1)**
ADC Accuracy – Measurements with External VREF+/VREF-							
AD20c	Nr	Resolution	10 data bits			bits	—
AD21c	INL	Integral Nonlinearity	> -1	—	< 1	LSb	VINL = AVSS = VREFL = 0V, AVDD = VREFH = 3.3V
AD22c	DNL	Differential Nonlinearity	> -1	—	< 1	LSb	VINL = AVSS = VREFL = 0V, AVDD = VREFH = 3.3V **(Note 2)**
AD23c	GERR	Gain Error	> -1	—	< 1	LSb	VINL = AVSS = VREFL = 0V, AVDD = VREFH = 3.3V
AD24c	EOFF	Offset Error	> -1	—	< 1	LSb	VINL = AVSS = 0V, AVDD = 3.3V
AD25c	—	Monotonicity	—	—	—	—	Guaranteed

Note 1: These parameters are not characterized or tested in manufacturing.

2: With no missing codes.

3: These parameters are characterized, but not tested in manufacturing.

4: Characterized with a 1 kHz sine wave.

5: The ADC module is functional at VBORMIN < VDD < 2.5V, but with degraded performance. Unless otherwise stated, module functionality is tested, but not characterized.

© 2009-2013 Microchip Technology Inc.

TABLE 31-36: ADC MODULE SPECIFICATIONS (CONTINUED)

AC CHARACTERISTICS			Standard Operating Conditions (see Note 5): 2.5V to 3.6V (unless otherwise stated) Operating temperature -40°C ≤ TA ≤ +85°C for Industrial -40°C ≤ TA ≤ +105°C for V-Temp				
Param. No.	**Symbol**	**Characteristics**	**Min.**	**Typical**	**Max.**	**Units**	**Conditions**
ADC Accuracy – Measurements with Internal VREF+/VREF-							
AD20d	Nr	Resolution	10 data bits			bits	**(Note 3)**
AD21d	INL	Integral Nonlinearity	> -1	—	< 1	LSb	VINL = AVSS = 0V, AVDD = 2.5V to 3.6V **(Note 3)**
AD22d	DNL	Differential Nonlinearity	> -1	—	< 1	LSb	VINL = AVSS = 0V, AVDD = 2.5V to 3.6V **(Notes 2,3)**
AD23d	GERR	Gain Error	> -4	—	< 4	LSb	VINL = AVSS = 0V, AVDD = 2.5V to 3.6V **(Note 3)**
AD24d	EOFF	Offset Error	> -2	—	< 2	LSb	VINL = AVSS = 0V, AVDD = 2.5V to 3.6V **(Note 3)**
AD25d	—	Monotonicity	—	—	—	—	Guaranteed
Dynamic Performance							
AD31b	SINAD	Signal to Noise and Distortion	55	58.5	—	dB	**(Notes 3,4)**
AD34b	ENOB	Effective Number of Bits	9.0	9.5	—	bits	**(Notes 3,4)**

Note 1: These parameters are not characterized or tested in manufacturing.

2: With no missing codes.

3: These parameters are characterized, but not tested in manufacturing.

4: Characterized with a 1 kHz sine wave.

5: The ADC module is functional at VBORMIN < VDD < 2.5V, but with degraded performance. Unless otherwise stated, module functionality is tested, but not characterized.

TABLE 31-37: 10-BIT ADC CONVERSION RATE PARAMETERS

Standard Operating Conditions (see Note 3): 2.5V to 3.6V (unless otherwise stated) Operating temperature -40°C ≤ TA ≤ +85°C for Industrial -40°C ≤ TA ≤ +105°C for V-Temp					
ADC Speed(2)	**TAD Minimum**	**Sampling Time Minimum**	**RS Maximum**	**VDD**	**ADC Channels Configuration**
1 Msps to 400 ksps(1)	65 ns	132 ns	500Ω	3.0V to 3.6V	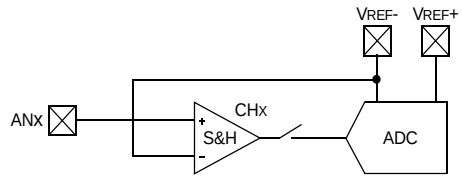
Up to 400 ksps	200 ns	200 ns	5.0 kΩ	2.5V to 3.6V	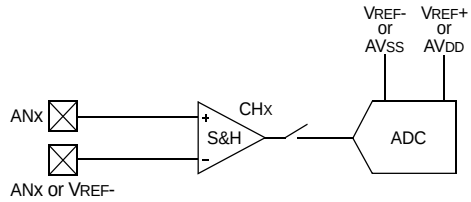

Note 1: External VREF- and VREF+ pins must be used for correct operation.

2: These parameters are characterized, but not tested in manufacturing.

3: The ADC module is functional at VBORMIN < VDD < 2.5V, but with degraded performance. Unless otherwise stated, module functionality is tested, but not characterized.

© 2009-2013 Microchip Technology Inc.

TABLE 31-38: ANALOG-TO-DIGITAL CONVERSION TIMING REQUIREMENTS

AC CHARACTERISTICS			Standard Operating Conditions (see Note 4): 2.5V to 3.6V (unless otherwise stated) Operating temperature -40°C ≤ TA ≤ +85°C for Industrial -40°C ≤ TA ≤ +105°C for V-Temp				
Param. No.	**Symbol**	**Characteristics**	**Min.**	**Typical(1)**	**Max.**	**Units**	**Conditions**
Clock Parameters							
AD50	TAD	Analog-to-Digital Clock Period(2)	65	—	—	ns	See Table 31-37
Conversion Rate							
AD55	TCONV	Conversion Time	—	12 TAD	—	—	—
AD56	FCNV	Throughput Rate (Sampling Speed)	—	—	1000	ksps	AVDD = 3.0V to 3.6V
			—	—	400	ksps	AVDD = 2.5V to 3.6V
AD57	TSAMP	Sample Time	1 TAD	—	—	—	TSAMP must be ≥ 132 ns
Timing Parameters							
AD60	TPCS	Conversion Start from Sample Trigger(3)	—	1.0 TAD	—	—	Auto-Convert Trigger (SSRC<2:0> = 111) not selected
AD61	TPSS	Sample Start from Setting Sample (SAMP) bit	0.5 TAD	—	1.5 TAD	—	—
AD62	TCSS	Conversion Completion to Sample Start (ASAM = 1)(3)	—	0.5 TAD	—	—	—
AD63	TDPU	Time to Stabilize Analog Stage from Analog-to-Digital Off to Analog-to-Digital On(3)	—	—	2	µs	—

Note 1: These parameters are characterized, but not tested in manufacturing.

2: Because the sample caps will eventually lose charge, clock rates below 10 kHz can affect linearity performance, especially at elevated temperatures.

3: Characterized by design but not tested.

4: The ADC module is functional at VBORMIN < VDD < 2.5V, but with degraded performance. Unless otherwise stated, module functionality is tested, but not characterized.

FIGURE 31-23: ANALOG-TO-DIGITAL CONVERSION (10-BIT MODE) TIMING CHARACTERISTICS (ASAM = 0, SSRC<2:0> = 000)

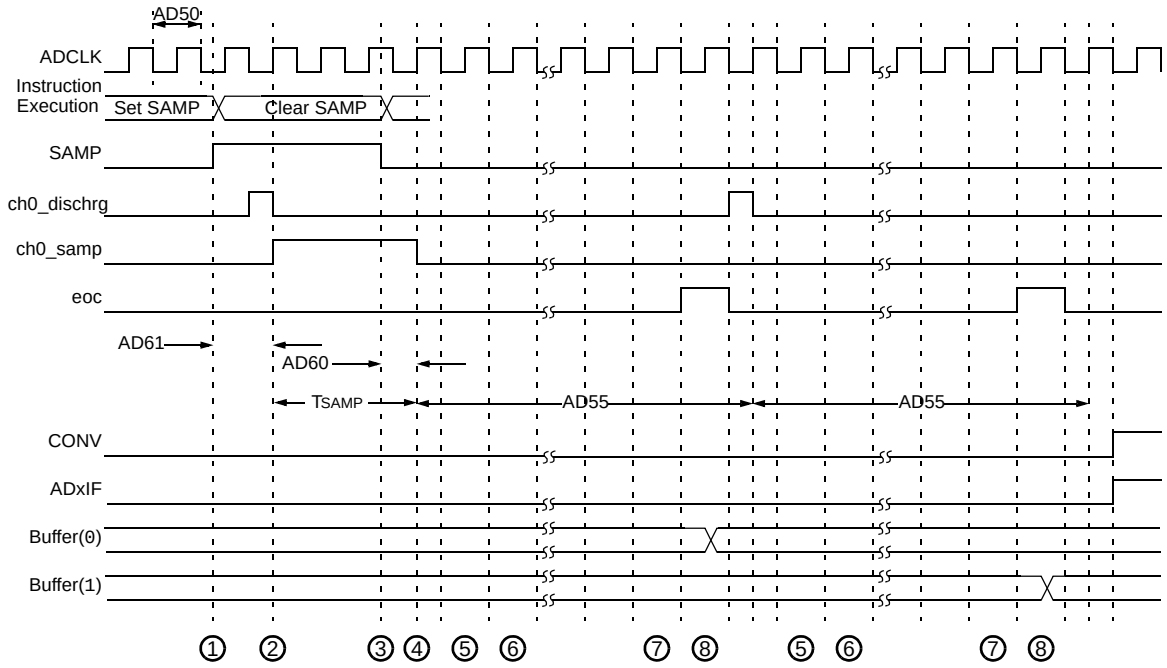

1 – Software sets ADxCON. SAMP to start sampling.

2 – Sampling starts after discharge period. TSAMP is described in Section 17. “10-bit A/D Converter” (DS60001104) of the *“PIC32 Family Reference Manual”*.

3 – Software clears ADxCON. SAMP to start conversion.

4 – Sampling ends, conversion sequence starts.

5 – Convert bit 9.

6 – Convert bit 8.

7 – Convert bit 0.

8 – One TAD for end of conversion.

© 2009-2013 Microchip Technology Inc.

FIGURE 31-24: ANALOG-TO-DIGITAL CONVERSION (10-BIT MODE) TIMING CHARACTERISTICS (ASAM = 1, SSRC<2:0> = 111, SAMC<4:0> = 00001)

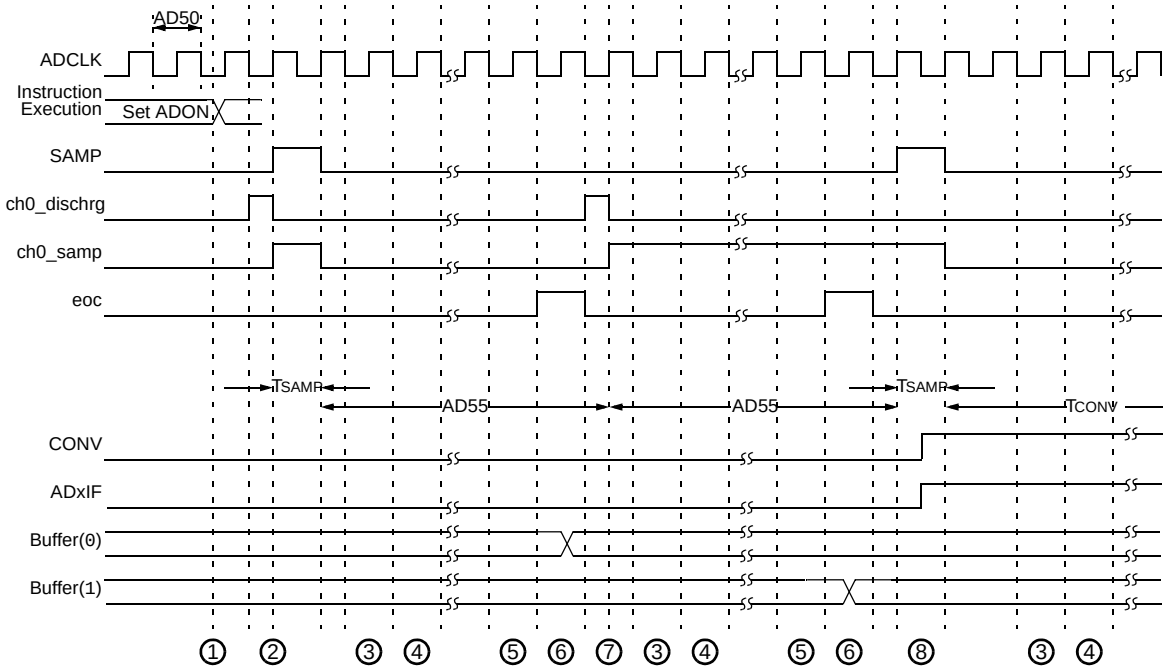

1 – Software sets ADxCON. ADON to start AD operation.

2 – Sampling starts after discharge period.
TSAMP is described in Section 17. “10-bit A/D Converter” (DS60001104) of the *“PIC32 Family Reference Manual*.

3 – Convert bit 9.

4 – Convert bit 8.

5 – Convert bit 0.

6 – One TAD for end of conversion.

7 – Begin conversion of next channel.

8 – Sample for time specified by SAMC<4:0>.

FIGURE 31-25: PARALLEL SLAVE PORT TIMING

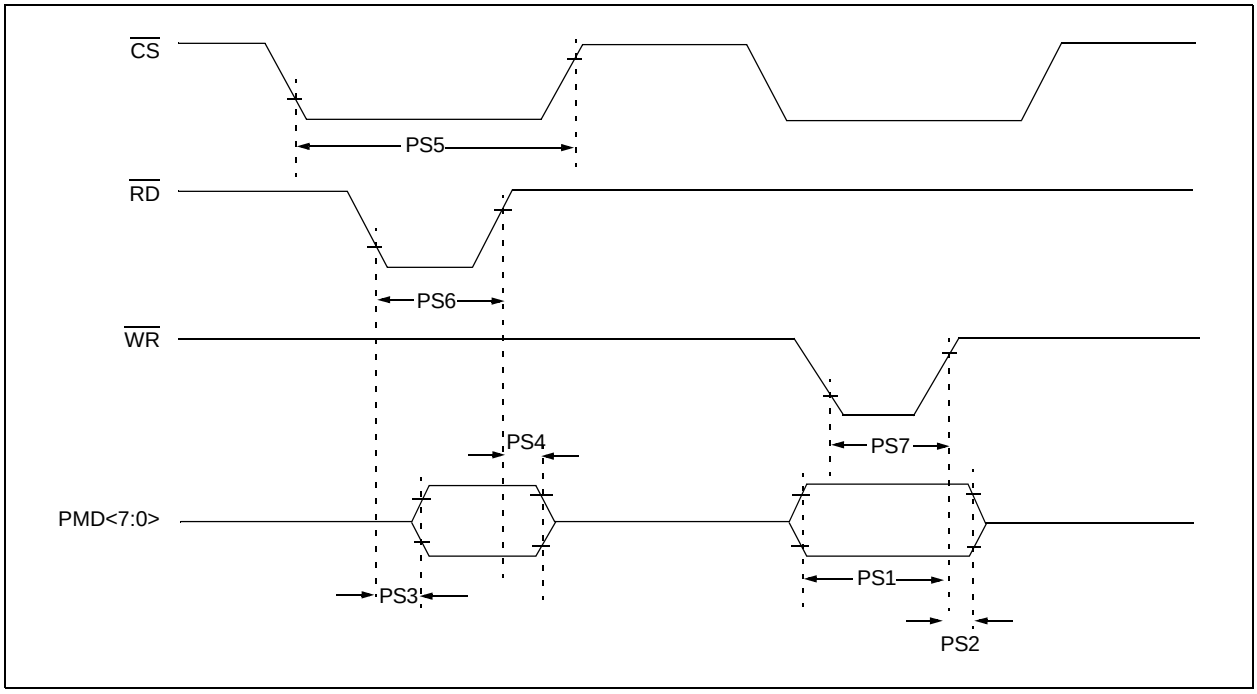

TABLE 31-39: PARALLEL SLAVE PORT REQUIREMENTS

AC CHARACTERISTICS			Standard Operating Conditions: 2.3V to 3.6V (unless otherwise stated) Operating temperature -40°C ≤ TA ≤ +85°C for Industrial -40°C ≤ TA ≤ +105°C for V-Temp				
Param. No.	**Symbol**	**Characteristics(1)**	**Min.**	**Typical**	**Max.**	**Units**	**Conditions**
PS1	TdtV2wrH	Data In Valid before $\overline{WR}$ or $\overline{CS}$ Inactive (setup time)	20	—	—	ns	—
PS2	TwrH2dtI	$\overline{WR}$ or $\overline{CS}$ Inactive to Data-In Invalid (hold time)	40	—	—	ns	—
PS3	TrdL2dtV	$\overline{RD}$ and $\overline{CS}$ Active to Data-Out Valid	—	—	60	ns	—
PS4	TrdH2dtI	$\overline{RD}$ Active or $\overline{CS}$ Inactive to Data-Out Invalid	0	—	10	ns	—
PS5	Tcs	$\overline{CS}$ Active Time	TPB + 40	—	—	ns	—
PS6	TWR	$\overline{WR}$ Active Time	TPB + 25	—	—	ns	—
PS7	TRD	$\overline{RD}$ Active Time	TPB + 25	—	—	ns	—

Note 1: These parameters are characterized, but not tested in manufacturing.

© 2009-2013 Microchip Technology Inc.

FIGURE 31-26: PARALLEL MASTER PORT READ TIMING DIAGRAM

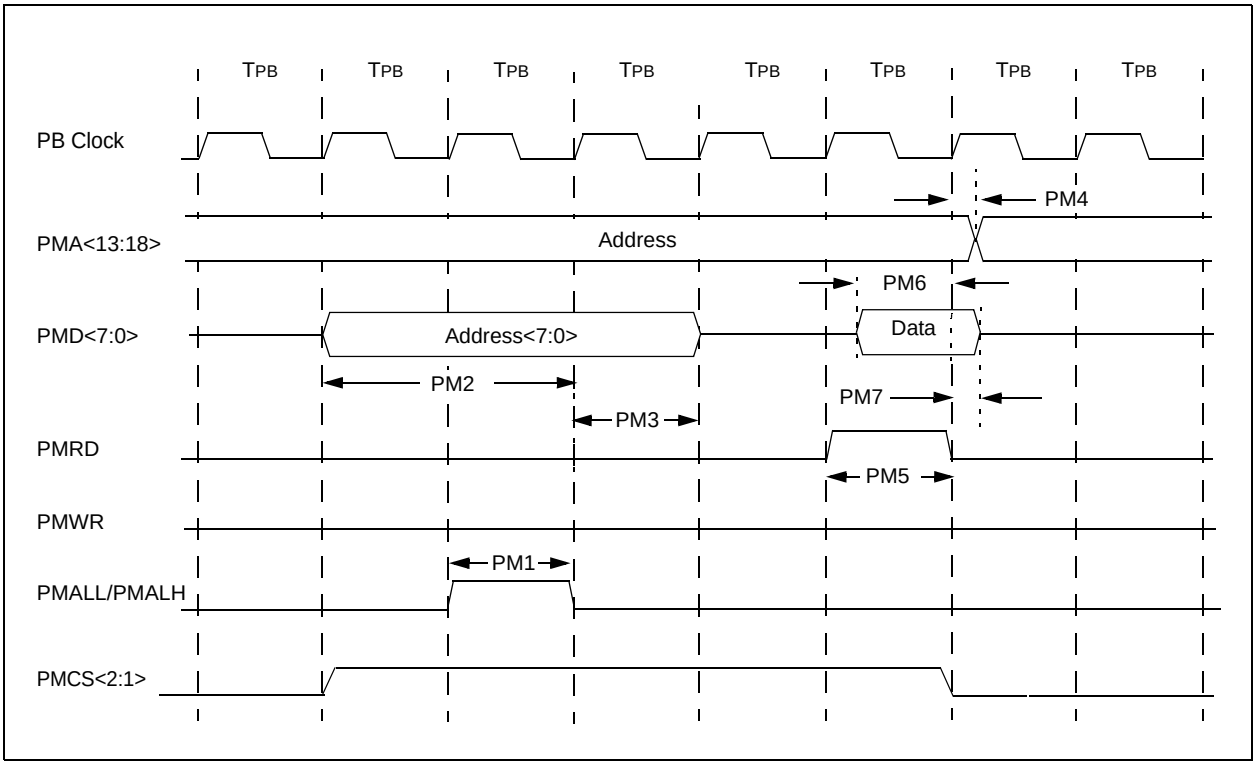

TABLE 31-40: PARALLEL MASTER PORT READ TIMING REQUIREMENTS

AC CHARACTERISTICS			Standard Operating Conditions: 2.3V to 3.6V (unless otherwise stated) Operating temperature -40°C ≤ TA ≤ +85°C for Industrial -40°C ≤ TA ≤ +105°C for V-Temp				
Param. No.	**Symbol**	**Characteristics(1)**	**Min.**	**Typical**	**Max.**	**Units**	**Conditions**
PM1	TLAT	PMALL/PMALH Pulse Width	—	1 TPB	—	—	—
PM2	TADSU	Address Out Valid to PMALL/ PMALH Invalid (address setup time)	—	2 TPB	—	—	—
PM3	TADHOLD	PMALL/PMALH Invalid to Address Out Invalid (address hold time)	—	1 TPB	—	—	—
PM4	TAHOLD	PMRD Inactive to Address Out Invalid (address hold time)	5	—	—	ns	—
PM5	TRD	PMRD Pulse Width	—	1 TPB	—	—	—
PM6	TDSU	PMRD or PMENB Active to Data In Valid (data setup time)	15	—	—	ns	—
PM7	TDHOLD	PMRD or PMENB Inactive to Data In Invalid (data hold time)	—	80	—	ns	—

Note 1: These parameters are characterized, but not tested in manufacturing.

FIGURE 31-27: PARALLEL MASTER PORT WRITE TIMING DIAGRAM

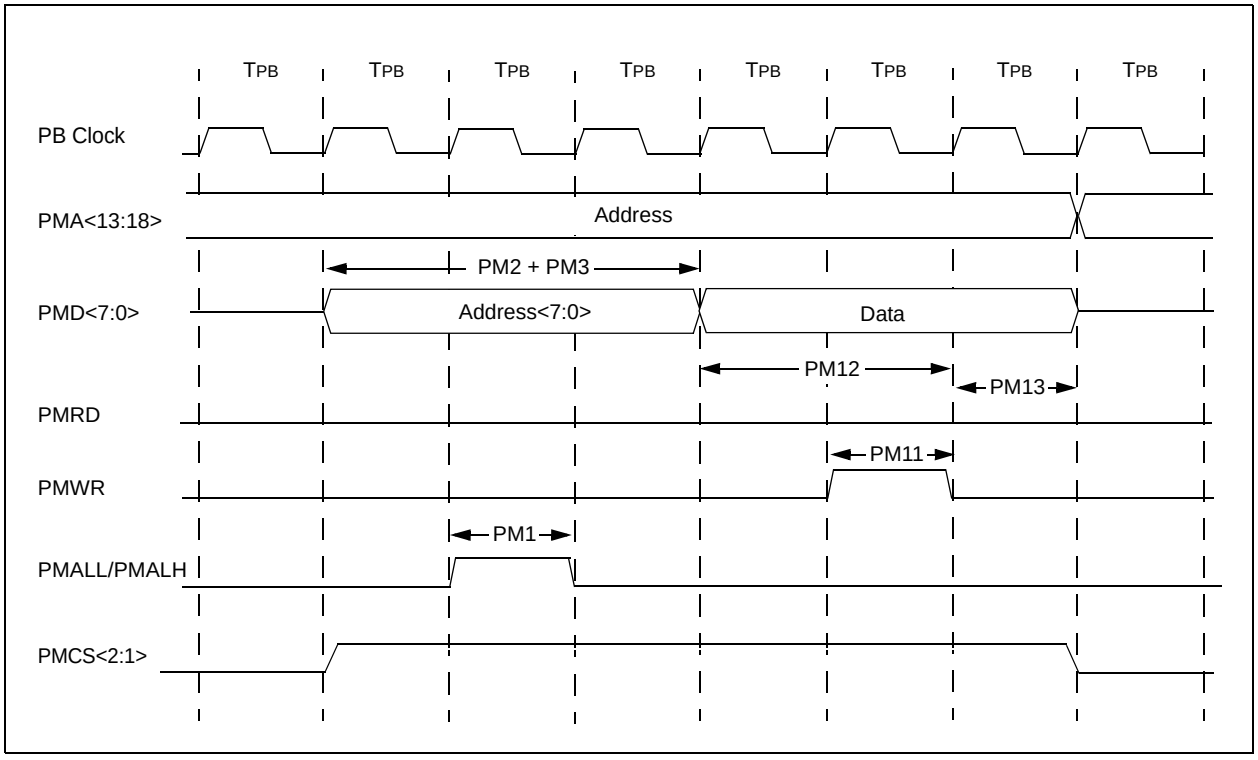

TABLE 31-41: PARALLEL MASTER PORT WRITE TIMING REQUIREMENTS

AC CHARACTERISTICS			Standard Operating Conditions: 2.3V to 3.6V (unless otherwise stated) Operating temperature -40°C ≤ TA ≤ +85°C for Industrial -40°C ≤ TA ≤ +105°C for V-Temp				
Param. No.	**Symbol**	**Characteristics(1)**	**Min.**	**Typical**	**Max.**	**Units**	**Conditions**
PM11	TWR	PMWR Pulse Width	—	1 TPB	—	—	—
PM12	TDVSU	Data Out Valid before PMWR or PMENB goes Inactive (data setup time)	—	2 TPB	—	—	—
PM13	TDVHOLD	PMWR or PMEMB Invalid to Data Out Invalid (data hold time)	—	1 TPB	—	—	—

Note 1: These parameters are characterized, but not tested in manufacturing.

© 2009-2013 Microchip Technology Inc.

TABLE 31-42: USB OTG ELECTRICAL SPECIFICATIONS

AC CHARACTERISTICS			Standard Operating Conditions: 2.3V to 3.6V (unless otherwise stated) Operating temperature -40°C ≤ TA ≤ +85°C for Industrial -40°C ≤ TA ≤ +105°C for V-Temp				
Param. No.	**Symbol**	**Characteristics(1)**	**Min.**	**Typical**	**Max.**	**Units**	**Conditions**
USB313	V_{USB3V3}	USB Voltage	3.0	—	3.6	V	Voltage on V_{USB3V3} must be in this range for proper USB operation
USB315	V_{ILUSB}	Input Low Voltage for USB Buffer	—	—	0.8	V	—
USB316	V_{IHUSB}	Input High Voltage for USB Buffer	2.0	—	—	V	—
USB318	V_{DIFS}	Differential Input Sensitivity	—	—	0.2	V	The difference between D+ and D- must exceed this value while VCM is met
USB319	VCM	Differential Common Mode Range	0.8	—	2.5	V	—
USB320	Z_{OUT}	Driver Output Impedance	28.0	—	44.0	Ω	—
USB321	V_{OL}	Voltage Output Low	0.0	—	0.3	V	14.25 kΩ load connected to 3.6V
USB322	V_{OH}	Voltage Output High	2.8	—	3.6	V	14.25 kΩ load connected to ground

Note 1: These parameters are characterized, but not tested in manufacturing.

FIGURE 31-28: EJTAG TIMING CHARACTERISTICS

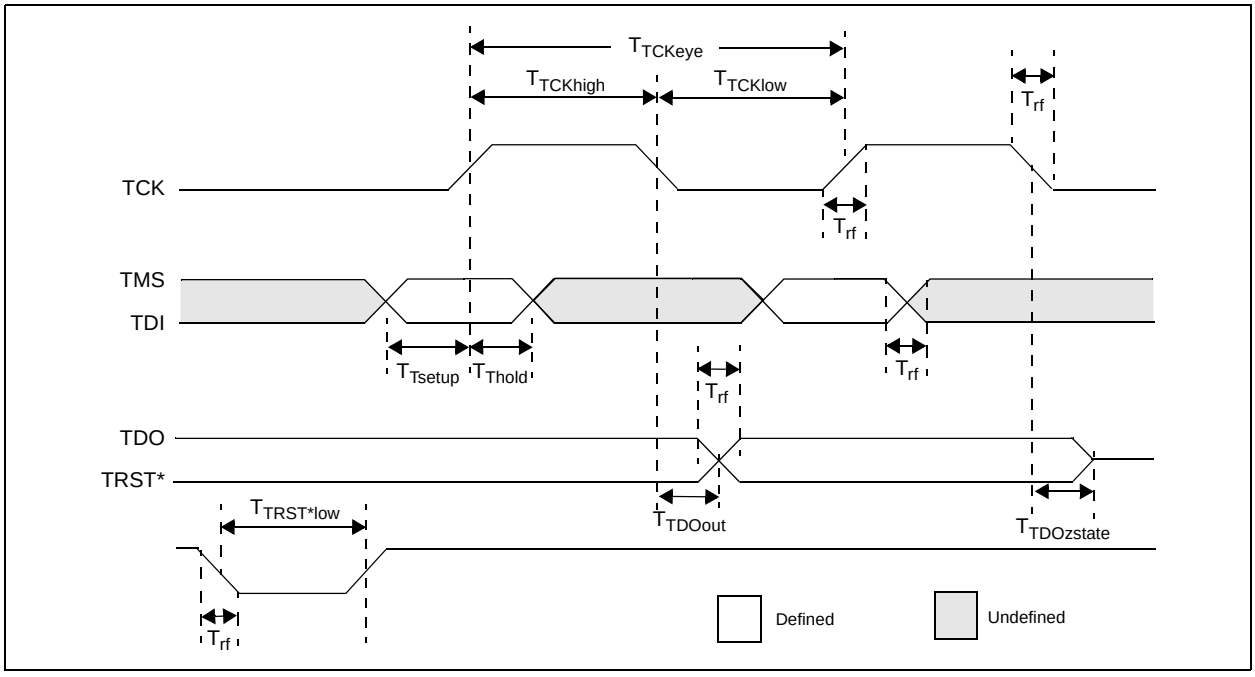

TABLE 31-43: EJTAG TIMING REQUIREMENTS

AC CHARACTERISTICS			Standard Operating Conditions: 2.3V to 3.6V (unless otherwise stated) Operating temperature -40°C ≤ TA ≤ +85°C for Industrial -40°C ≤ TA ≤ +105°C for V-Temp			
Param. No.	**Symbol**	**Description(1)**	**Min.**	**Max.**	**Units**	**Conditions**
EJ1	TTCKCYC	TCK Cycle Time	25	—	ns	—
EJ2	TTCKHIGH	TCK High Time	10	—	ns	—
EJ3	TTCKLOW	TCK Low Time	10	—	ns	—
EJ4	TTSETUP	TAP Signals Setup Time Before Rising TCK	5	—	ns	—
EJ5	TTHOLD	TAP Signals Hold Time After Rising TCK	3	—	ns	—
EJ6	TTDOOUT	TDO Output Delay Time from Falling TCK	—	5	ns	—
EJ7	TTDOZSTATE	TDO 3-State Delay Time from Falling TCK	—	5	ns	—
EJ8	TTRSTLOW	TRST Low Time	25	—	ns	—
EJ9	TRF	TAP Signals Rise/Fall Time, All Input and Output	—	—	ns	—

Note 1: These parameters are characterized, but not tested in manufacturing.

© 2009-2013 Microchip Technology Inc.

32.0 DC AND AC DEVICE CHARACTERISTICS GRAPHS

Note: The graphs provided following this note are a statistical summary based on a limited number of samples and are provided for design guidance purposes only. The performance characteristics listed herein are not tested or guaranteed. In some graphs, the data presented may be outside the specified operating range (e.g., outside specified power supply range) and therefore, outside the warranted range.

FIGURE 32-1: VOH – 4x DRIVER PINS

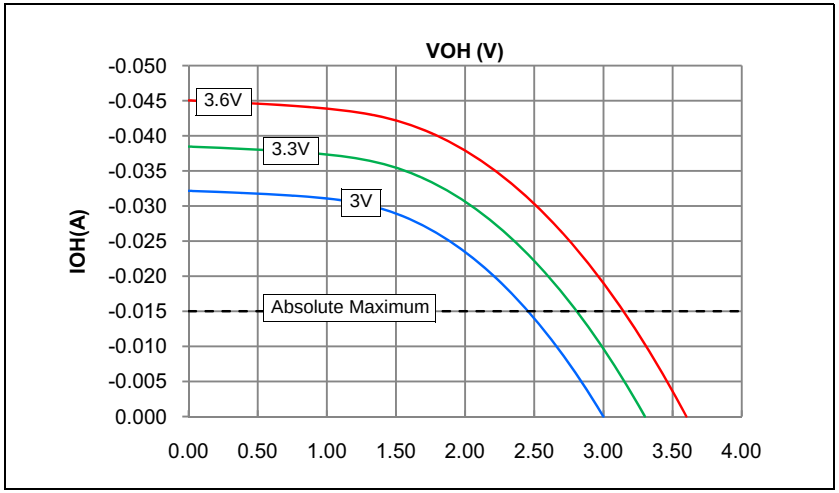

FIGURE 32-2: VOH – 8x DRIVER PINS

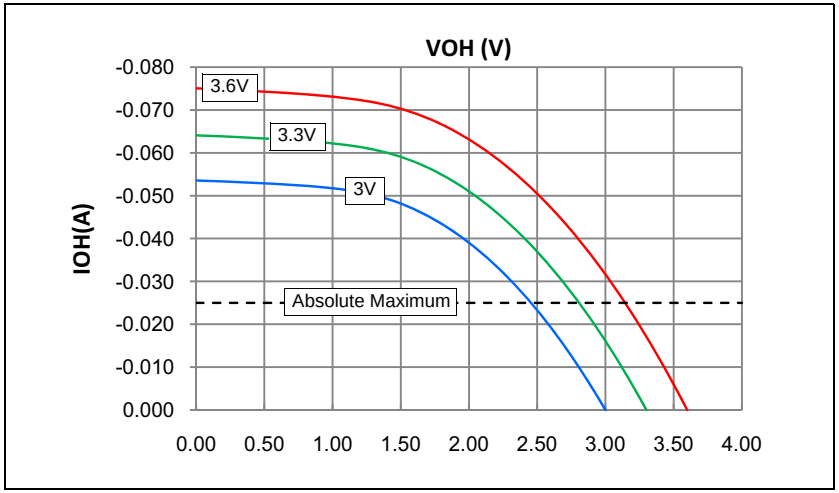

FIGURE 32-3: VOL – 4x DRIVER PINS

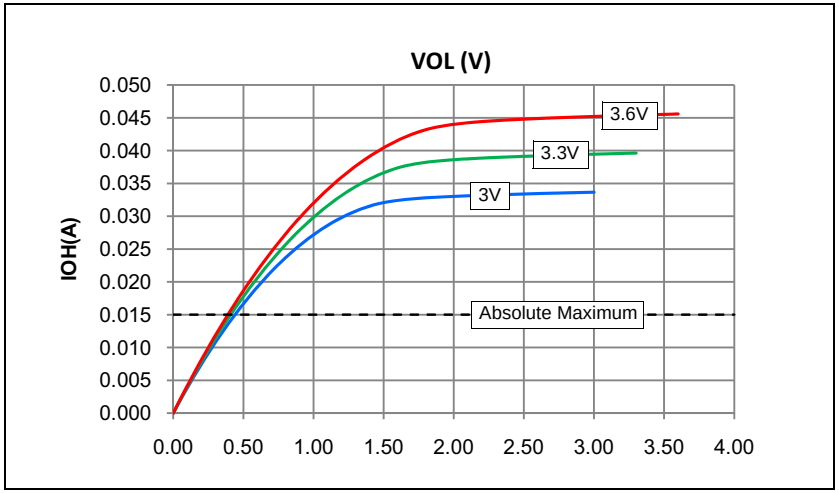

FIGURE 32-4: VOL – 8x DRIVER PINS

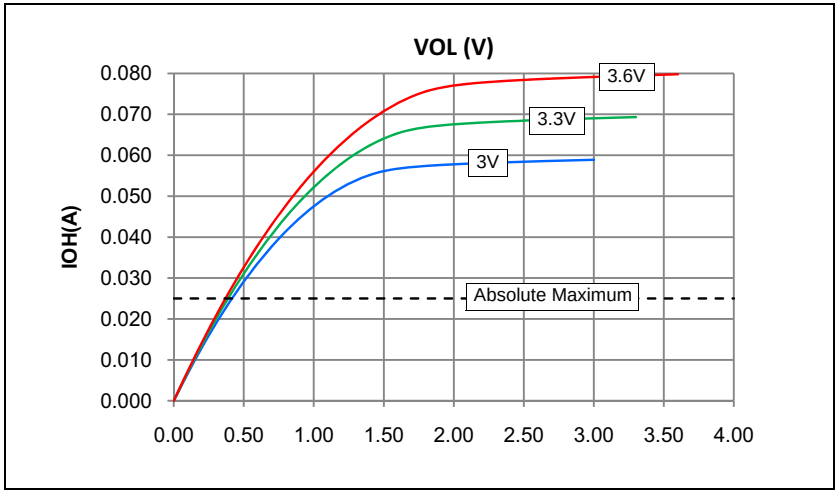

© 2009-2013 Microchip Technology Inc.

NOTES:

© 2009-2013 Microchip Technology Inc.

33.0 PACKAGING INFORMATION

33.1 Package Marking Information

64-Lead TQFP (10x10x1 mm)

Example

100-Lead TQFP (14x14x1 mm)

Example

100-Lead TQFP (12x12x1 mm)

Example

Legend:	XX...X	Customer-specific information
	Y	Year code (last digit of calendar year)
	YY	Year code (last 2 digits of calendar year)
	WW	Week code (week of January 1 is week ‘01’)
	NNN	Alphanumeric traceability code
		Pb-free JEDEC designator for Matte Tin (Sn)
	*	This package is Pb-free. The Pb-free JEDEC designator (e3) can be found on the outer packaging for this package.
Note:	In the event the full Microchip part number cannot be marked on one line, it will be carried over to the next line, thus limiting the number of available characters for customer-specific information.	

33.1 Package Marking Information (Continued)

64-Lead QFN (9x9x0.9 mm)

XXXXXXXXXX
XXXXXXXXXX
XXXXXXXXXX
YYWWNNN

Example

PIC32MX575F
512H-80I/MR
e3
0510017

121-Lead TFBGA (10x10x1.1 mm)

XXXXXXXXXX
XXXXXXXXXX
XXXXXXXXXX
YYWWNNN

Example

PIC32MX575F
512H-80I/BG
e3
0510017

124-Lead VTLA (9x9x0.9 mm)

XXXXXXXXXX
XXXXXXXXXX
XXXXXXXXXX
YYWWNNN

Example

PIC32MX795F
512L-80I/TL
e3
0510017

Legend:	XX...X	Customer-specific information
	Y	Year code (last digit of calendar year)
	YY	Year code (last 2 digits of calendar year)
	WW	Week code (week of January 1 is week ‘01’)
	NNN	Alphanumeric traceability code
		Pb-free JEDEC designator for Matte Tin (Sn)
	*	This package is Pb-free. The Pb-free JEDEC designator (e3) can be found on the outer packaging for this package.
Note:	In the event the full Microchip part number cannot be marked on one line, it will be carried over to the next line, thus limiting the number of available characters for customer-specific information.	

© 2009-2013 Microchip Technology Inc.

33.2 Package Details

The following sections give the technical details of the packages.

64-Lead Plastic Thin Quad Flatpack (PT) – 10x10x1 mm Body, 2.00 mm [TQFP]

Note: For the most current package drawings, please see the Microchip Packaging Specification located at http://www.microchip.com/packaging

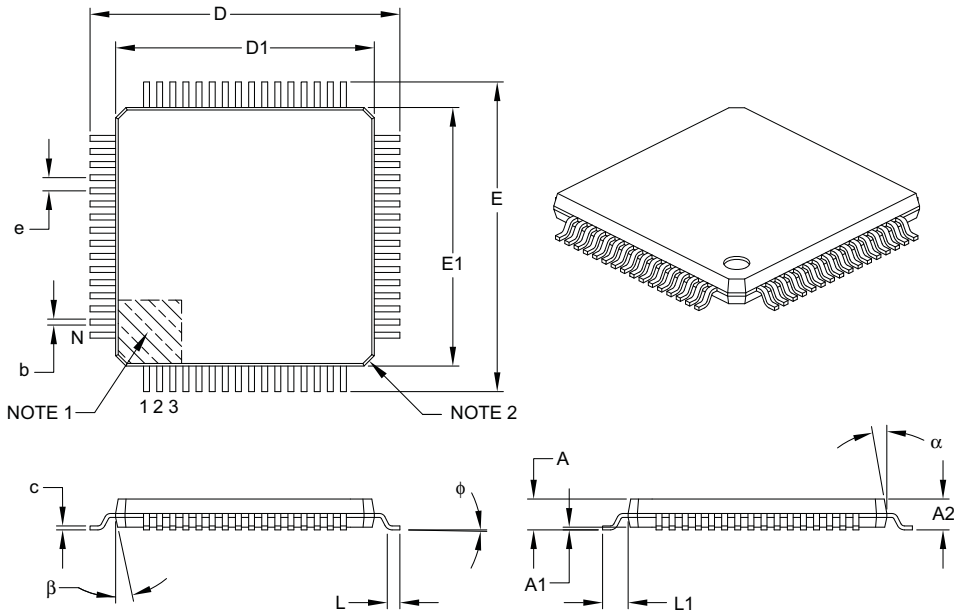

Units		MILLIMETERS		
Dimension Limits		MIN	NOM	MAX
Number of Leads	N	64		
Lead Pitch	e	0.50 BSC		
Overall Height	A	–	–	1.20
Molded Package Thickness	A2	0.95	1.00	1.05
Standoff	A1	0.05	–	0.15
Foot Length	L	0.45	0.60	0.75
Footprint	L1	1.00 REF		
Foot Angle	ϕ	0°	3.5°	7°
Overall Width	E	12.00 BSC		
Overall Length	D	12.00 BSC		
Molded Package Width	E1	10.00 BSC		
Molded Package Length	D1	10.00 BSC		
Lead Thickness	c	0.09	–	0.20
Lead Width	b	0.17	0.22	0.27
Mold Draft Angle Top	α	11°	12°	13°
Mold Draft Angle Bottom	β	11°	12°	13°

Notes:

1. Pin 1 visual index feature may vary, but must be located within the hatched area.
2. Chamfers at corners are optional; size may vary.
3. Dimensions D1 and E1 do not include mold flash or protrusions. Mold flash or protrusions shall not exceed 0.25 mm per side.
4. Dimensioning and tolerancing per ASME Y14.5M.

   BSC: Basic Dimension. Theoretically exact value shown without tolerances.

   REF: Reference Dimension, usually without tolerance, for information purposes only.

Microchip Technology Drawing C04-085B

64-Lead Plastic Thin Quad Flatpack (PT) 10x10x1 mm Body, 2.00 mm Footprint [TQFP]

Note: For the most current package drawings, please see the Microchip Packaging Specification located at http://www.microchip.com/packaging

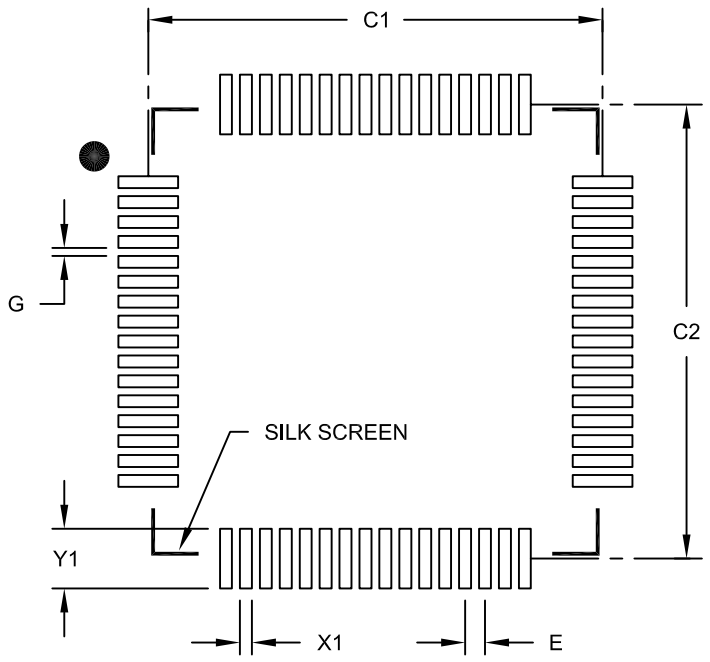

RECOMMENDED LAND PATTERN

Units		MILLIMETERS		
Dimension Limits		MIN	NOM	MAX
Contact Pitch	E		0.50 BSC	
Contact Pad Spacing	C1		11.40	
Contact Pad Spacing	C2		11.40	
Contact Pad Width (X64)	X1			0.30
Contact Pad Length (X64)	Y1			1.50
Distance Between Pads	G	0.20		

Notes:

1. Dimensioning and tolerancing per ASME Y14.5M
   BSC: Basic Dimension. Theoretically exact value shown without tolerances.

Microchip Technology Drawing No. C04-2085B

© 2009-2013 Microchip Technology Inc.

100-Lead Plastic Thin Quad Flatpack (PF) – 14x14x1 mm Body, 2.00 mm [TQFP]

Note: For the most current package drawings, please see the Microchip Packaging Specification located at http://www.microchip.com/packaging

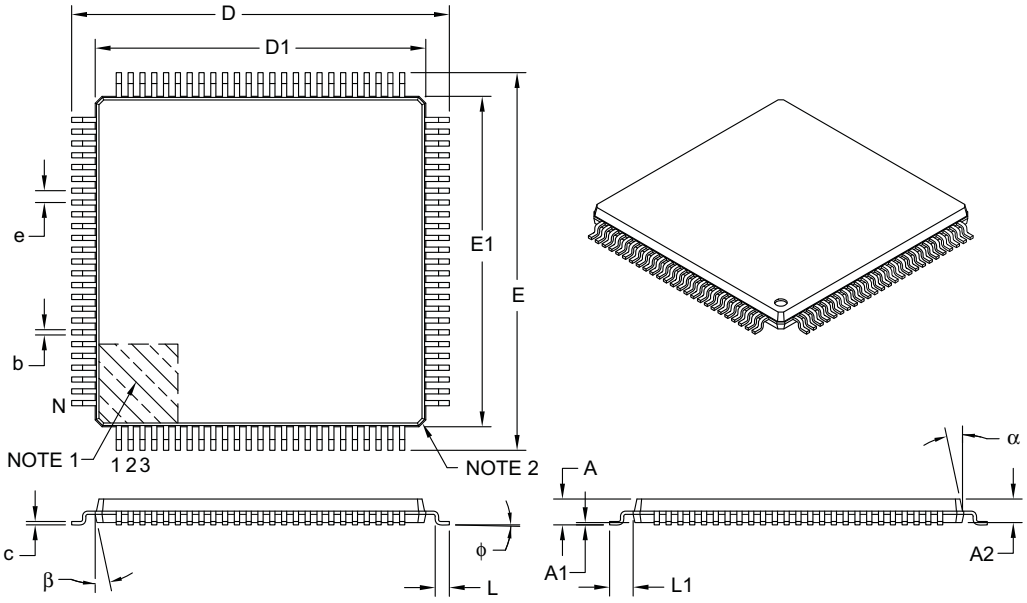

Units		MILLIMETERS		
Dimension Limits		MIN	NOM	MAX
Number of Leads	N	100		
Lead Pitch	e	0.50 BSC		
Overall Height	A	–	–	1.20
Molded Package Thickness	A2	0.95	1.00	1.05
Standoff	A1	0.05	–	0.15
Foot Length	L	0.45	0.60	0.75
Footprint	L1	1.00 REF		
Foot Angle	ϕ	0°	3.5°	7°
Overall Width	E	16.00 BSC		
Overall Length	D	16.00 BSC		
Molded Package Width	E1	14.00 BSC		
Molded Package Length	D1	14.00 BSC		
Lead Thickness	c	0.09	–	0.20
Lead Width	b	0.17	0.22	0.27
Mold Draft Angle Top	α	11°	12°	13°
Mold Draft Angle Bottom	β	11°	12°	13°

Notes:

1. Pin 1 visual index feature may vary, but must be located within the hatched area.
2. Chamfers at corners are optional; size may vary.
3. Dimensions D1 and E1 do not include mold flash or protrusions. Mold flash or protrusions shall not exceed 0.25 mm per side.
4. Dimensioning and tolerancing per ASME Y14.5M.

   BSC: Basic Dimension. Theoretically exact value shown without tolerances.

   REF: Reference Dimension, usually without tolerance, for information purposes only.

Microchip Technology Drawing C04-110B

100-Lead Plastic Thin Quad Flatpack (PF) - 14x14x1 mm Body 2.00 mm Footprint [TQFP]

Note: For the most current package drawings, please see the Microchip Packaging Specification located at http://www.microchip.com/packaging

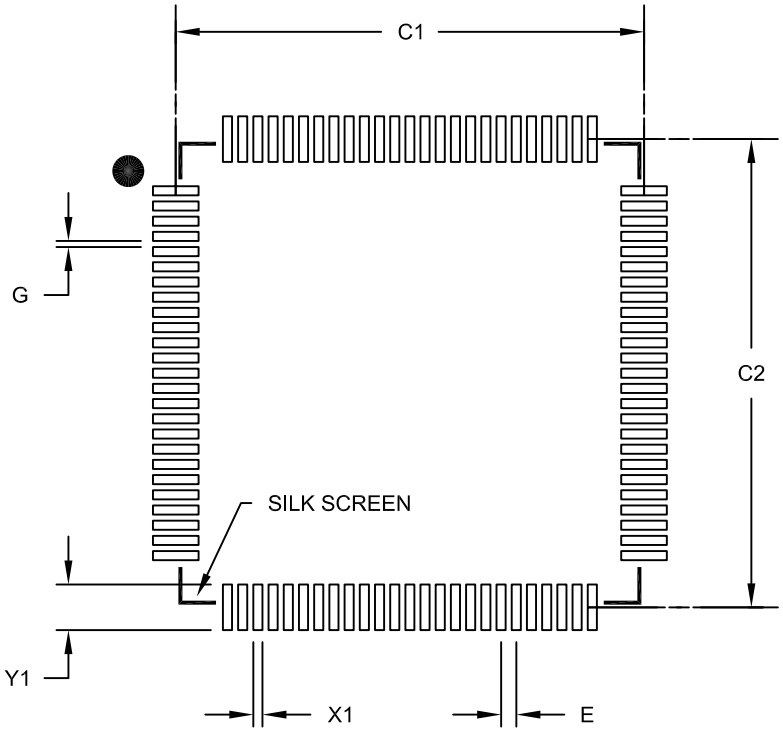

RECOMMENDED LAND PATTERN

Units		MILLIMETERS		
Dimension Limits		MIN	NOM	MAX
Contact Pitch	E		0.50 BSC	
Contact Pad Spacing	C1		15.40	
Contact Pad Spacing	C2		15.40	
Contact Pad Width (X100)	X1			0.30
Contact Pad Length (X100)	Y1			1.50
Distance Between Pads	G	0.20		

Notes:

1. Dimensioning and tolerancing per ASME Y14.5M
   BSC: Basic Dimension. Theoretically exact value shown without tolerances.

Microchip Technology Drawing No. C04-2110B

© 2009-2013 Microchip Technology Inc.

100-Lead Plastic Thin Quad Flatpack (PT) – 12x12x1 mm Body, 2.00 mm [TQFP]

Note: For the most current package drawings, please see the Microchip Packaging Specification located at http://www.microchip.com/packaging

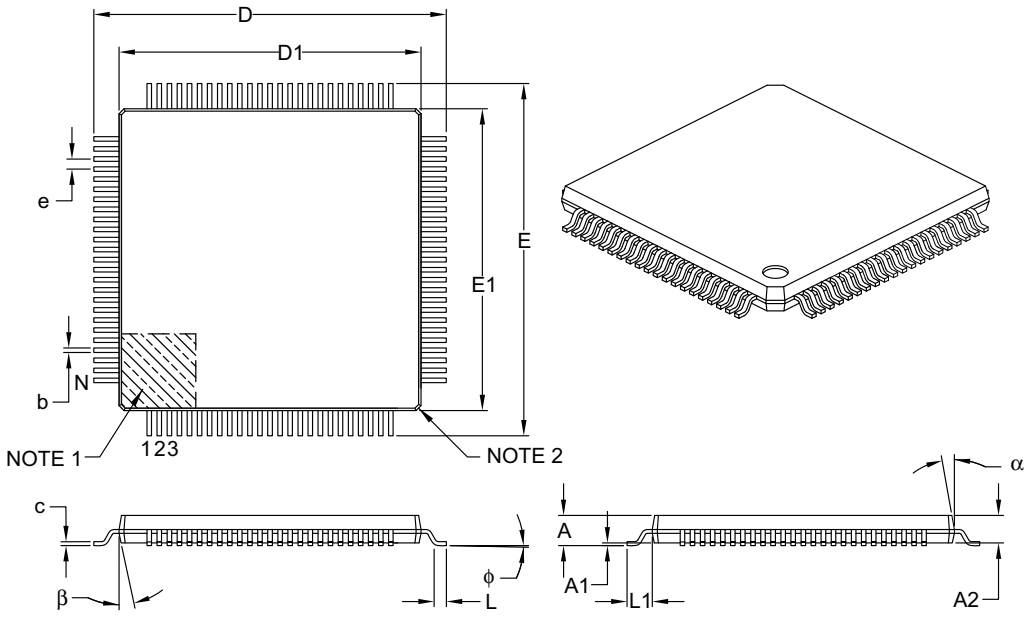

Units		MILLIMETERS		
Dimension Limits		MIN	NOM	MAX
Number of Leads	N	100		
Lead Pitch	e	0.40 BSC		
Overall Height	A	–	–	1.20
Molded Package Thickness	A2	0.95	1.00	1.05
Standoff	A1	0.05	–	0.15
Foot Length	L	0.45	0.60	0.75
Footprint	L1	1.00 REF		
Foot Angle	φ	0°	3.5°	7°
Overall Width	E	14.00 BSC		
Overall Length	D	14.00 BSC		
Molded Package Width	E1	12.00 BSC		
Molded Package Length	D1	12.00 BSC		
Lead Thickness	c	0.09	–	0.20
Lead Width	b	0.13	0.18	0.23
Mold Draft Angle Top	α	11°	12°	13°
Mold Draft Angle Bottom	β	11°	12°	13°

Notes:

1. Pin 1 visual index feature may vary, but must be located within the hatched area.
2. Chamfers at corners are optional; size may vary.
3. Dimensions D1 and E1 do not include mold flash or protrusions. Mold flash or protrusions shall not exceed 0.25 mm per side.
4. Dimensioning and tolerancing per ASME Y14.5M.

   BSC: Basic Dimension. Theoretically exact value shown without tolerances.

   REF: Reference Dimension, usually without tolerance, for information purposes only.

Microchip Technology Drawing C04-100B

100-Lead Plastic Thin Quad Flatpack (PT)-12x12x1mm Body, 2.00 mm Footprint [TQFP]

Note: For the most current package drawings, please see the Microchip Packaging Specification located at http://www.microchip.com/packaging

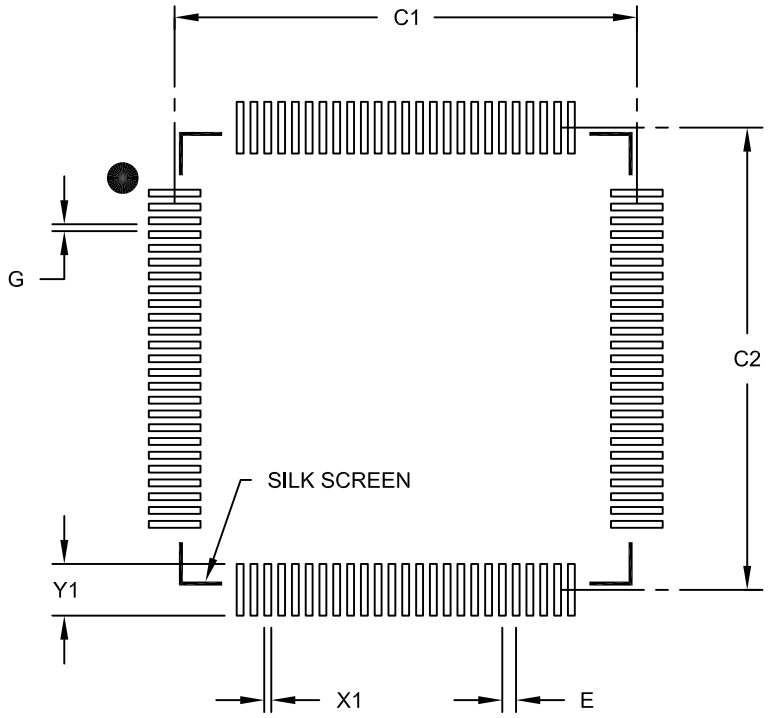

RECOMMENDED LAND PATTERN

Units		MILLIMETERS		
Dimension Limits		MIN	NOM	MAX
Contact Pitch	E		0.40 BSC	
Contact Pad Spacing	C1		13.40	
Contact Pad Spacing	C2		13.40	
Contact Pad Width (X100)	X1			0.20
Contact Pad Length (X100)	Y1			1.50
Distance Between Pads	G	0.20		

Notes:

1. Dimensioning and tolerancing per ASME Y14.5M

   BSC: Basic Dimension. Theoretically exact value shown without tolerances.

Microchip Technology Drawing No. C04-2100B

© 2009-2013 Microchip Technology Inc.

64-Lead Plastic Quad Flat, No Lead Package (MR) – 9x9x0.9 mm Body [QFN]
With 7.15 x 7.15 Exposed Pad [QFN]

Note:	For the most current package drawings, please see the Microchip Packaging Specification located at http://www.microchip.com/packaging

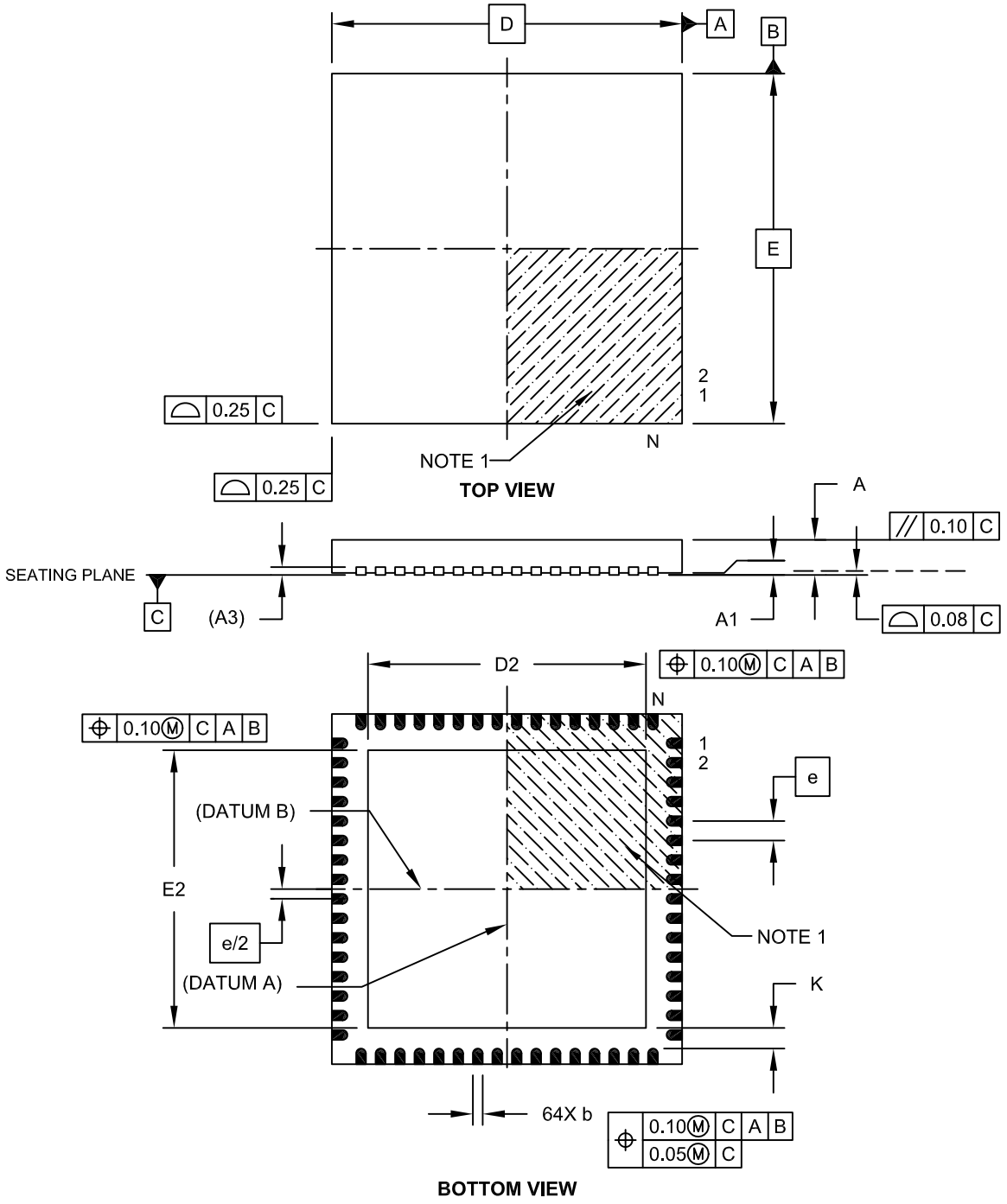

Microchip Technology Drawing C04-149C Sheet 1 of 2

64-Lead Plastic Quad Flat, No Lead Package (MR) – 9x9x0.9 mm Body [QFN] With 7.15 x 7.15 Exposed Pad [QFN]

Note: For the most current package drawings, please see the Microchip Packaging Specification located at http://www.microchip.com/packaging

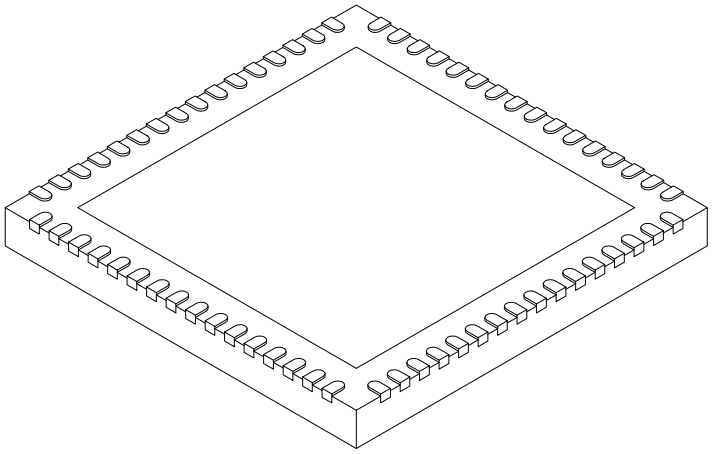

Units		MILLIMETERS		
Dimension Limits		MIN	NOM	MAX
Number of Pins	N	64		
Pitch	e	0.50 BSC		
Overall Height	A	0.80	0.90	1.00
Standoff	A1	0.00	0.02	0.05
Contact Thickness	A3	0.20 REF		
Overall Width	E	9.00 BSC		
Exposed Pad Width	E2	7.05	7.15	7.50
Overall Length	D	9.00 BSC		
Exposed Pad Length	D2	7.05	7.15	7.50
Contact Width	b	0.18	0.25	0.30
Contact Length	L	0.30	0.40	0.50
Contact-to-Exposed Pad	K	0.20	-	-

Notes:

1. Pin 1 visual index feature may vary, but must be located within the hatched area.
2. Package is saw singulated.
3. Dimensioning and tolerancing per ASME Y14.5M.
   BSC: Basic Dimension. Theoretically exact value shown without tolerances.
   REF: Reference Dimension, usually without tolerance, for information purposes only.

Microchip Technology Drawing C04-149C Sheet 2 of 2

© 2009-2013 Microchip Technology Inc.

64-Lead Plastic Quad Flat, No Lead Package (MR) – 9x9x0.9 mm Body [QFN]
With 0.40 mm Contact Length

Note: For the most current package drawings, please see the Microchip Packaging Specification located at http://www.microchip.com/packaging

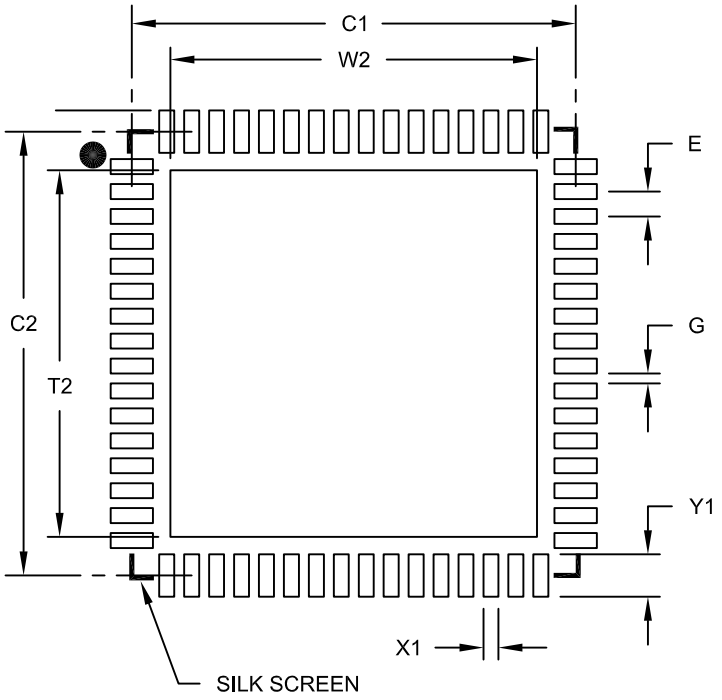

RECOMMENDED LAND PATTERN

Units		MILLIMETERS		
Dimension Limits		MIN	NOM	MAX
Contact Pitch	E		0.50 BSC	
Optional Center Pad Width	W2			7.35
Optional Center Pad Length	T2			7.35
Contact Pad Spacing	C1		8.90	
Contact Pad Spacing	C2		8.90	
Contact Pad Width (X64)	X1			0.30
Contact Pad Length (X64)	Y1			0.85
Distance Between Pads	G	0.20		

Notes:

1. Dimensioning and tolerancing per ASME Y14.5M
   BSC: Basic Dimension. Theoretically exact value shown without tolerances.

Microchip Technology Drawing No. C04-2149A

121-Lead Plastic Thin Profile Ball Grid Array (BG) - 10x10x1.10 mm Body [TFBGA–Formerly XBGA]

Note:	For the most current package drawings, please see the Microchip Packaging Specification located at http://www.microchip.com/packaging

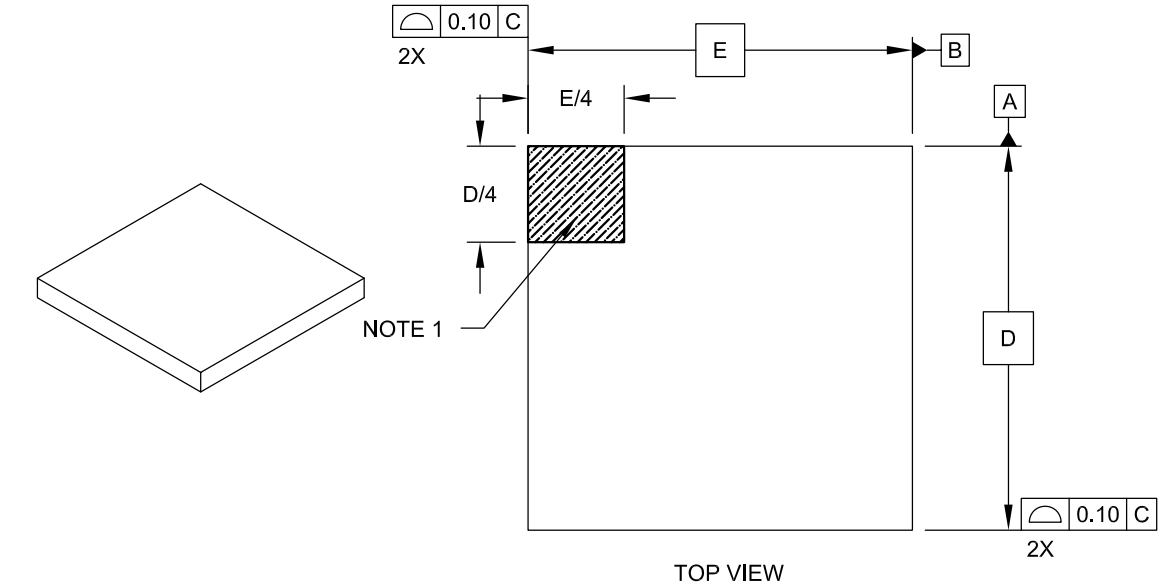

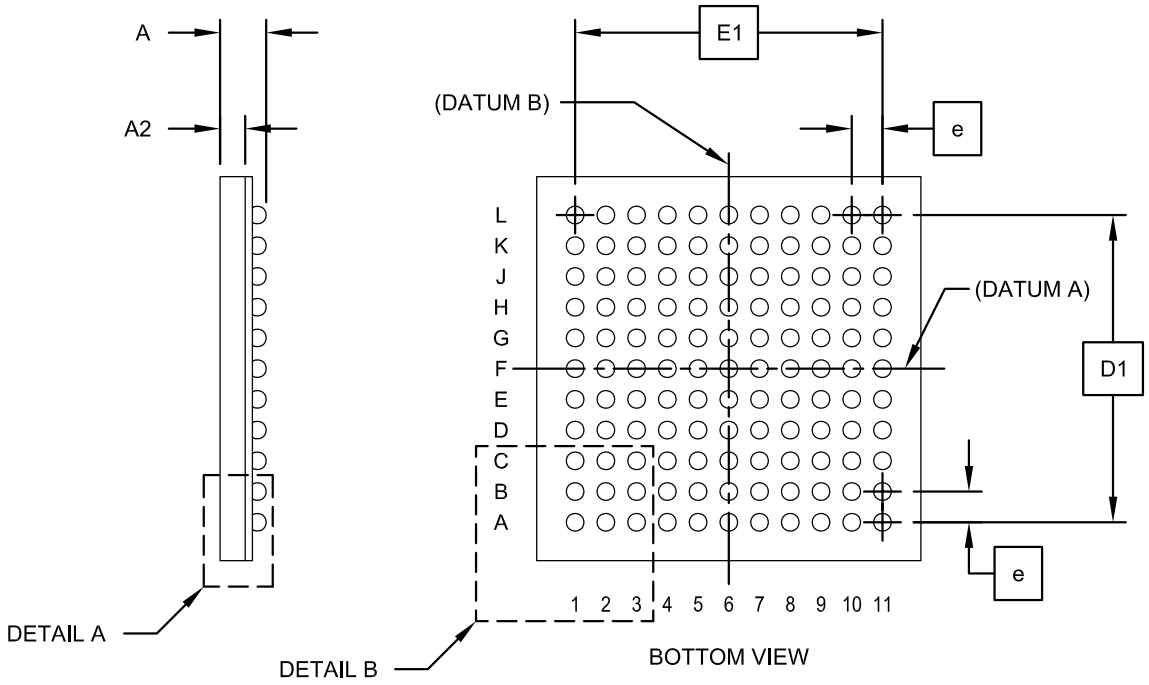

Microchip Technology Drawing C04-148 Rev D Sheet 1 of 2

© 2009-2013 Microchip Technology Inc.

121-Lead Plastic Thin Profile Ball Grid Array (BG) - 10x10x1.10 mm Body [TFBGA–Formerly XBGA]

Note: For the most current package drawings, please see the Microchip Packaging Specification located at http://www.microchip.com/packaging

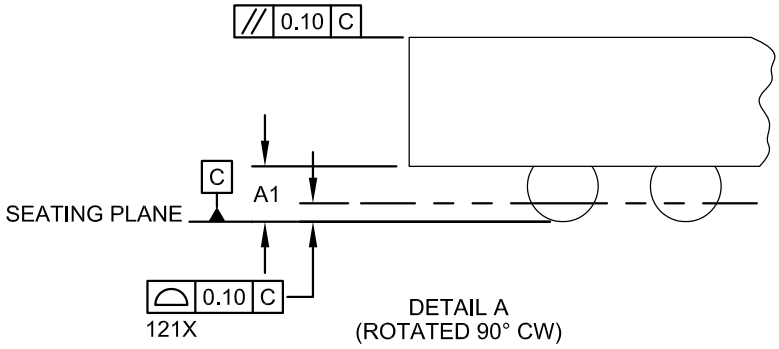

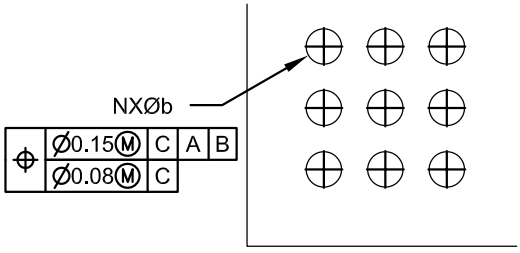

DETAIL B

Units		MILLIMETERS		
Dimension Limits		MIN	NOM	MAX
Number of Contacts	N	121		
Contact Pitch	e	0.80 BSC		
Overall Height	A	1.00	1.10	1.20
Standoff	A1	0.25	0.30	0.35
Molded Package Thickness	A2	0.55	0.60	0.65
Overall Width	E	10.00 BSC		
Array Width	E1	8.00 BSC		
Overall Length	D	10.00 BSC		
Array Length	D1	8.00 BSC		
Contact Diameter	b	0.40 TYP		

Notes:
1. Pin 1 visual index feature may vary, but must be located within the hatched area.
2. Dimensioning and tolerancing per ASME Y14.5M.
   BSC: Basic Dimension. Theoretically exact value shown without tolerances.
   REF: Reference Dimension, usually without tolerance, for information purposes only.
3. The outer rows and colums of balls are located with respect to datums A and B.

Microchip Technology Drawing C04-148 Rev D Sheet 2 of 2

121-Lead Plastic Thin Profile Ball Grid Array (BG) - 10x10x1.10 mm Body [TFBGA--Formerly XBGA]

Note: For the most current package drawings, please see the Microchip Packaging Specification located at http://www.microchip.com/packaging

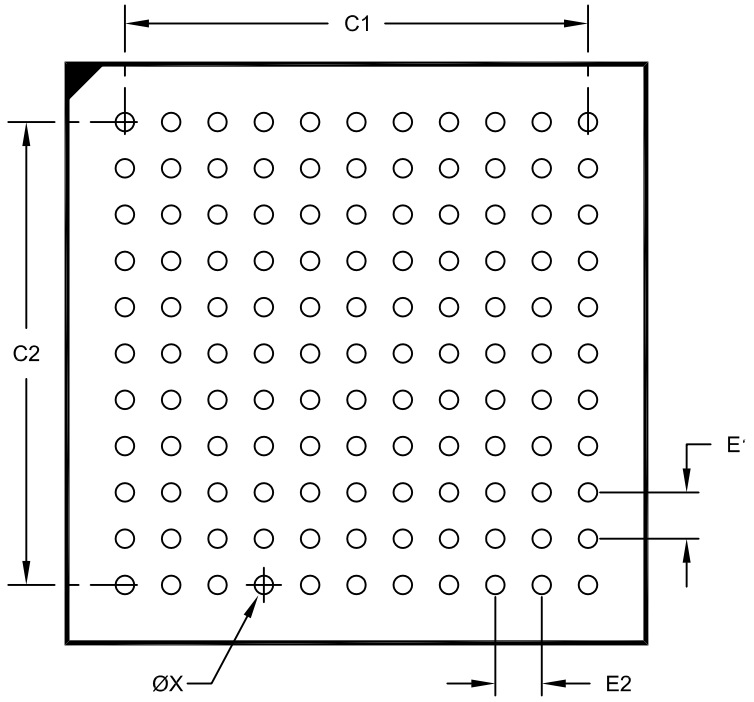

RECOMMENDED LAND PATTERN

Units		MILLIMETERS		
Dimension Limits		MIN	NOM	MAX
Contact Pitch	E1		0.80 BSC	
Contact Pitch	E2		0.80 BSC	
Contact Pad Spacing	C1		8.00	
Contact Pad Spacing	C2		8.00	
Contact Pad Diameter (X121)	X			0.32

Notes:

1. Dimensioning and tolerancing per ASME Y14.5M

   BSC: Basic Dimension. Theoretically exact value shown without tolerances.

Microchip Technology Drawing No. C04-2148 Rev D

© 2009-2013 Microchip Technology Inc.

124-Terminal Very Thin Leadless Array Package (TL) – 9x9x0.9 mm Body [VTLA]

Note: For the most current package drawings, please see the Microchip Packaging Specification located at http://www.microchip.com/packaging

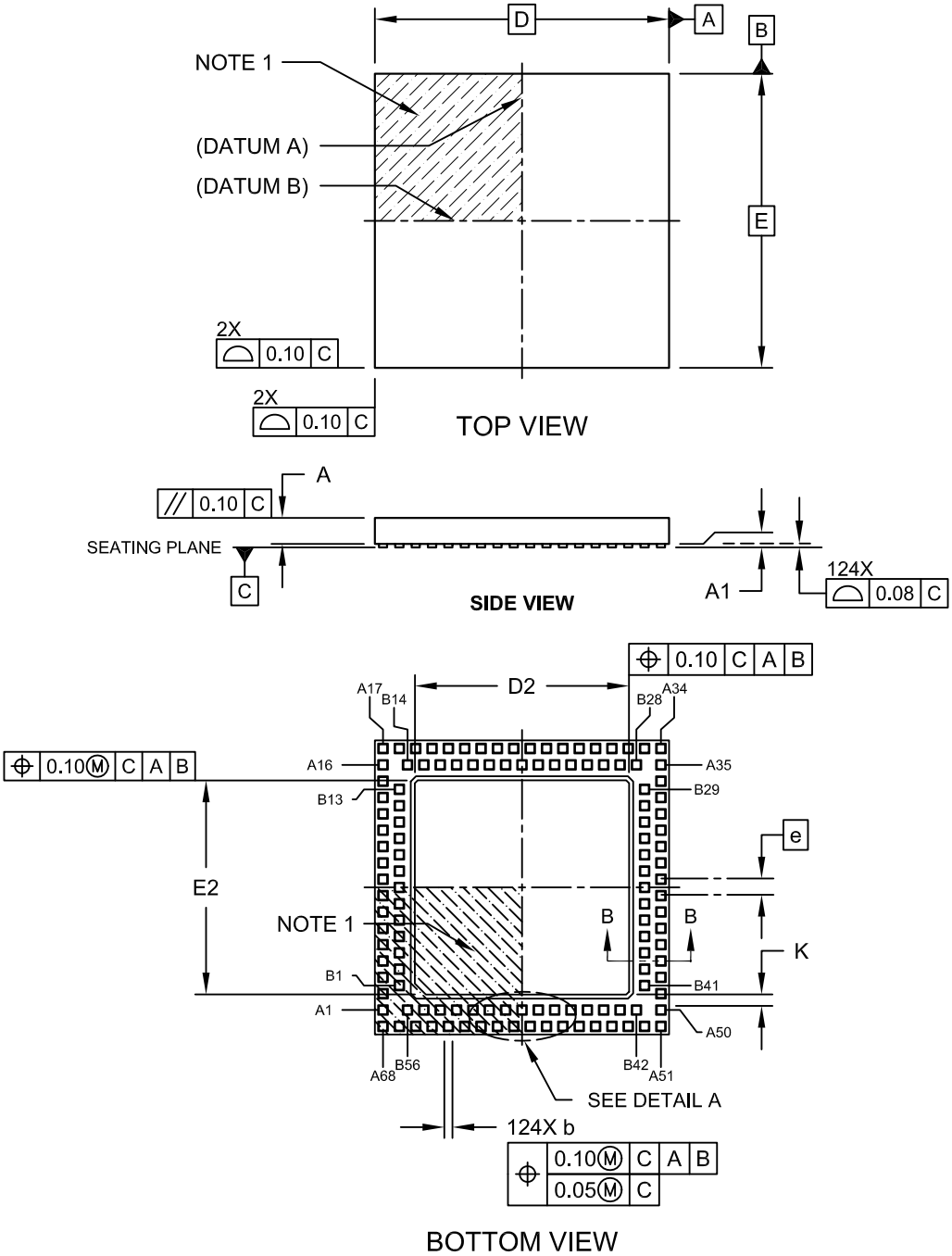

Microchip Technology Drawing C04-193A Sheet 1 of 2

124-Terminal Very Thin Leadless Array Package (TL) – 9x9x0.9 mm Body [VTLA]

Note: For the most current package drawings, please see the Microchip Packaging Specification located at http://www.microchip.com/packaging

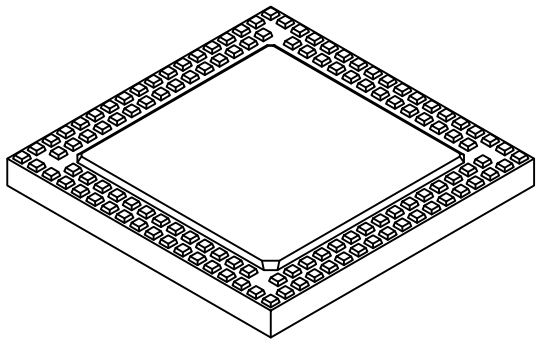

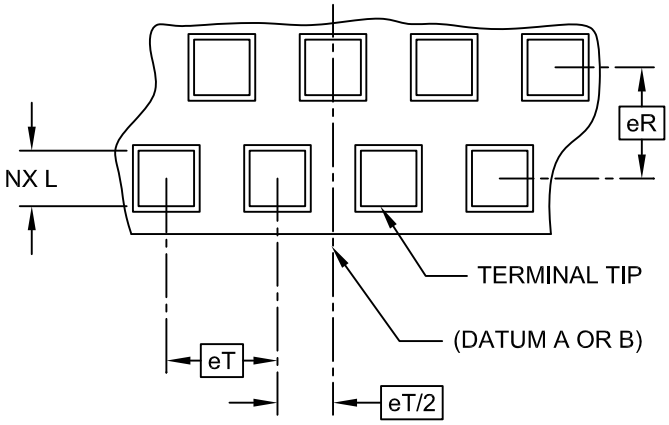

DETAIL A

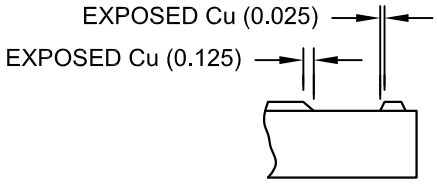

SECTION B-B

Units		MILLIMETERS		
Dimension Limits		MIN	NOM	MAX
Number of Pins	N		124	
Pitch	eT		0.50 BSC	
Pitch (Inner to outer terminal ring)	eR		0.50 BSC	
Overall Height	A	0.80	0.85	0.90
Standoff	A1	0.00	-	0.05
Overall Width	E		9.00 BSC	
Exposed Pad Width	E2	6.40	6.55	6.70
Overall Length	D		9.00 BSC	
Exposed Pad Length	D2	6.40	6.55	6.70
Contact Width	b	0.20	0.25	0.30
Contact Length	L	0.20	0.25	0.30
Contact-to-Exposed Pad	K	0.20	-	-

Notes:

1. Pin 1 visual index feature may vary, but must be located within the hatched area.
2. Package is saw singulated.
3. Dimensioning and tolerancing per ASME Y14.5M.
   BSC: Basic Dimension. Theoretically exact value shown without tolerances.
   REF: Reference Dimension, usually without tolerance, for information purposes only.

Microchip Technology Drawing C04-193A Sheet 2 of 2

© 2009-2013 Microchip Technology Inc.

APPENDIX A: MIGRATING FROM PIC32MX3XX/4XX TO PIC32MX5XX/6XX/7XX DEVICES

This appendix provides an overview of considerations for migrating from PIC32MX3XX/4XX devices to the PIC32MX5XX/6XX/7XX family of devices. The code developed for the PIC32MX3XX/4XX devices can be ported to the PIC32MX5XX/6XX/7XX devices after making the appropriate changes outlined below.

A.1 DMA

PIC32MX5XX/6XX/7XX devices do not support stopping DMA transfers in Idle mode.

A.2 Interrupts

PIC32MX5XX/6XX/7XX devices have persistent interrupts for some of the peripheral modules. This means that the interrupt condition for these peripherals must be cleared before the interrupt flag can be cleared.

For example, to clear a UART receive interrupt, the user application must first read the UART Receive register to clear the interrupt condition and then clear the associated UxIF flag to clear the pending UART interrupt. In other words, the UxIF flag cannot be cleared by software until the UART Receive register is read.

Table A-1 outlines the peripherals and associated interrupts that are implemented differently on PIC32MX5XX/6XX/7XX versus PIC32MX3XX/4XX devices.

In addition, on the SPI module, the IRQ numbers for the receive done interrupts were changed from 25 to 24 and the transfer done interrupts were changed from 24 to 25.

TABLE A-1: PIC32MX3XX/4XX VERSUS PIC32MX5XX/6XX/7XX INTERRUPT IMPLEMENTATION DIFFERENCES

Module	Interrupt Implementation
Input Capture	To clear an interrupt source, read the Buffer Result (ICxBUF) register to obtain the number of capture results in the buffer that are below the interrupt threshold (specified by ICI<1:0> bits).
SPI	Receive and transmit interrupts are controlled by the SRXISEL<1:0> and STXISEL<1:0> bits, respectively. To clear an interrupt source, data must be written to, or read from, the SPIxBUF register to obtain the number of data to receive/transmit below the level specified by the SRXISEL<1:0> and STXISEL<1:0> bits.
UART	TX interrupt will be generated as soon as the UART module is enabled. Receive and transmit interrupts are controlled by the URXISEL<1:0> and UTXISEL<1:0> bits, respectively. To clear an interrupt source, data must be read from, or written to, the UxRXREG or UxTXREG registers to obtain the number of data to receive/transmit below the level specified by the URXISEL<1:0> and UTXISEL<1:0> bits.
ADC	All samples must be read from the result registers (ADC1BUFx) to clear the interrupt source.
PMP	To clear an interrupt source, read the Parallel Master Port Data Input/Output (PMDIN/PMDOUT) register.

APPENDIX B: REVISION HISTORY

Revision A (August 2009)

This is the initial released version of this document.

Revision B (November 2009)

The revision includes the following global update:

Added Note 2 to the shaded table that appears at the beginning of each chapter. This new note provides information regarding the availability of registers and their associated bits.

Other major changes are referenced by their respective chapter/section in Table B-1.

TABLE B-1: MAJOR SECTION UPDATES

Section Name	Update Description
"High-Performance, USB, CAN and Ethernet 32-bit Flash Microcontrollers"	Added the following devices: - PIC32MX575F256L - PIC32MX695F512L - PIC32MX695F512H The 100-pin TQFP pin diagrams have been updated to reflect the current pin name locations (see the **"Pin Diagrams"** section). Added the 121-pin Ball Grid Array (XBGA) pin diagram. Updated Table 1: "PIC32 USB and CAN – Features" Added the following tables: - Table 4: "Pin Names: PIC32MX534F064L, PIC32MX564F064L, PIC32MX564F128L, PIC32MX575F256L and PIC32MX575F512L Devices" - Table 5: "Pin Names: PIC32MX664F064L, PIC32MX664F128L, PIC32MX675F256L, PIC32MX675F512L and PIC32MX695F512L Devices" - Table 6: "Pin Names: PIC32MX775F256L, PIC32MX775F512L and PIC32MX795F512L Devices" Updated the following pins as 5V tolerant: - 64-pin QFN: Pin 36 (D-/RG3) and Pin 37 (D+/RG2) - 64-pin TQFP: Pin 36 (D-/RG3) and Pin 37 (D+/RG2) - 100-pin TQFP: Pin 56 (D-/RG3) and Pin 57 (D+/RG2)
1.0 "Guidelines for Getting Started with 32-bit Microcontrollers"	Removed the last sentence of **1.3.1 "Internal Regulator Mode"**. Removed Section 2.3.2 "External Regulator Mode"

© 2009-2013 Microchip Technology Inc.

TABLE B-1: MAJOR SECTION UPDATES (CONTINUED)

Section Name	Update Description
4.0 "Memory Organization"	Updated all register tables to include the Virtual Address and All Resets columns. Updated the title of Figure 4-4 to include the PIC32MX575F256L device. Updated the title of Figure 4-6 to include the PIC32MX695F512L and PIC32MX695F512H devices. Also changed PIC32MX795F512L to PIC32MX795F512**H**. Updated the title of Table 4-3 to include the PIC32MX695F512H device. Updated the title of Table 4-5 to include the PIC32MX575F5256L device. Updated the title of Table 4-6 to include the PIC32MX695F512L device. Reversed the order of Table 4-11 and Table 4-12. Reversed the order of Table 4-14 and Table 4-15. Updated the title of Table 4-15 to include the PIC32MX575F256L and PIC32MX695F512L devices. Updated the title of Table 4-45 to include the PIC32MX575F256L device. Updated the title of Table 4-47 to include the PIC32MX695F512H and PIC32MX695F512L devices.
1.0 "I/O Ports"	Updated the second paragraph of **1.1.2 "Digital Inputs"** and removed Table 12-1.
22.0 "10-bit Analog-to-Digital Converter (ADC)"	Updated the ADC Conversion Clock Period Block Diagram (see Figure 22-2).
1.0 "Special Features"	Removed references to the ENVREG pin in **1.3 "On-Chip Voltage Regulator"**. Updated the first sentence of **1.3.1 "On-Chip Regulator and POR"** and **1.3.2 "On-Chip Regulator and BOR"**. Updated the Connections for the On-Chip Regulator (see Figure 1-2).
1.0 "Electrical Characteristics"	Updated the Absolute Maximum Ratings and added Note 3. Added Thermal Packaging Characteristics for the 121-pin XBGA package (see Table 1-3). Updated the Operating Current (I_{DD}) DC Characteristics (see Table 1-5). Updated the Idle Current (I_{IDLE}) DC Characteristics (see Table 1-6). Updated the Power-Down Current (I_{PD}) DC Characteristics (see Table 1-7). Removed Note 1 from the Program Flash Memory Wait State Characteristics (see Table 1-12). Updated the SPIx Module Slave Mode (CKE = 1) Timing Characteristics, changing SP52 to SP35 between the MSb and Bit 14 on SDOx (see Figure 1-13).
1.0 "Packaging Information"	Added the 121-pin XBGA package marking information and package details.
"Product Identification System"	Added the definition for BG (121-lead 10x10x1.1 mm, XBGA). Added the definition for Speed.

Revision C (February 2010)

The revision includes the following updates, as described in Table B-2:

TABLE B-2: MAJOR SECTION UPDATES

Section Name	Update Description
"High-Performance, USB, CAN and Ethernet 32-bit Flash Microcontrollers"	Added the following devices: • PIC32MX675F256H • PIC32MX775F256H • PIC32MX775F512H • PIC32MX675F256L • PIC32MX775F256L • PIC32MX775F512L Added the following pins: • EREFCLK • ECRSDV • AEREFCLK • AECRSDV Added the EREFCLK and ECRSDV pins to Table 5 and Table 6.
1.0 "Device Overview"	Updated the pin number pinout I/O descriptions for the following pin names in Table 1-1: • SCL3 • SCL5 • RTCC • C1OUT • SDA3 • SDA5 • CVREF- • C2IN- • SCL2 • TMS • CVREF+ • C2IN+ • SDA2 • TCK • CVREFOUT • C2OUT • SCL4 • TDI • C1IN- • PMA0 • SDA4 • TDO • C1IN+ • PMA1 Added the following pins to the Pinout I/O Descriptions table (Table 1-1): • EREFCLK • ECRSDV • AEREFCLK • AECRSDV
4.0 "Memory Organization"	Added new devices and updated the virtual and physical memory map values in Figure 4-4. Added new devices to Figure 4-5. Added new devices to the following register maps: • Table 4-3, Table 4-4, Table 4-6 and Table 4-7 (Interrupt Register Maps) • Table 4-12 (I2C2 Register Map) • Table 4-15 (SPI1 Register Map) • Table 4-24 through Table 4-35 (PORTA-PORTG Register Maps) • Table 4-36 and Table 4-37 (Change Notice and Pull-up Register Maps) • Table 4-45 (CAN1 Register Map) • Table 4-46 (CAN2 Register Map) • Table 4-47 (Ethernet Controller Register Map) Changed the bits named POSCMD to POSCMOD in Table 4-42 (Device Configuration Word Summary).
1.0 "Special Features"	Changed all references of POSCMD to POSCMOD in the Device Configuration Word 1 register (see Register 1-2).
Appendix A: "Migrating from PIC32MX3XX/4XX to PIC32MX5XX/6XX/7XX Devices"	Added the new section Appendix .

© 2009-2013 Microchip Technology Inc.

Revision D (May 2010)

The revision includes the following updates, as described in Table B-3:

TABLE B-3: MAJOR SECTION UPDATES

Section Name	Update Description
"High-Performance, USB, CAN and Ethernet 32-bit Flash Microcontrollers"	Updated the initial Flash memory range to 64K. Updated the initial SRAM memory range to 16K. Added the following devices (see Table 1, Table 2, Table 3 and the Pin Diagrams): • PIC32MX534F064H • PIC32MX564F064H • PIC32MX664F064H • PIC32MX564F128H • PIC32MX664F128H • PIC32MX764F128H • PIC32MX534F064L • PIC32MX564F064L • PIC32MX664F064L • PIC32MX564F128L • PIC32MX664F128L • PIC32MX764F128L
4.0 "Memory Organization"	Added new Memory Maps (Figure 4-1, Figure 4-2 and Figure 4-3). The bit named I2CSIF was changed to I2C1SIF and the bit named I2CBIF was changed to I2C1BIF in the Interrupt Register Map tables (Table 4-2, Table 4-3, Table 4-4, Table 4-5, Table 4-6 and Table 4-7) Added the following devices to the Interrupt Register Map (Table 4-2): • PIC32MX534F064H • PIC32MX564F064H • PIC32MX564F128H Added the following devices to the Interrupt Register Map (Table 4-3): • PIC32MX664F064H • PIC32MX664F128H Added the following device to the Interrupt Register Map (Table 4-4): • PIC32MX764F128H Added the following devices to the Interrupt Register Map (Table 4-5): • PIC32MX534F064L • PIC32MX564F064L • PIC32MX564F128L Added the following devices to the Interrupt Register Map (Table 4-6): • PIC32MX664F064L • PIC32MX664F128L Added the following device to the Interrupt Register Map (Table 4-7): • PIC32MX764F128L

TABLE B-3: MAJOR SECTION UPDATES (CONTINUED)

Section Name	Update Description
4.0 “Memory Organization” (Continued)	Made the following bit name changes in the I2C1, I2C3, I2C4 and I2C5 Register Map (Table 4-11): • I2C3BRG SFR: I2C1BRG was changed to I2C3BRG • I2C4BRG SFR: I2C1BRG was changed to I2C4BRG • I2C5BRG SFR: I2C1BRG was changed to I2C5BRG • I2C4TRN SFR: I2CT1DATA was changed to I2CT2ADATA • I2C4RCV SFR: I2CR2DATA was changed to I2CR2ADATA • I2C5TRN SFR: I2CT1DATA was changed to I2CT3ADATA • I2C5RCV SFR: I2CR1DATA was changed to I2CR3ADATA Added the RTSMD bit and UEN<1:0> bits to the UART1A, UART1B, UART2A, UART2B, UART3A and UART3B Register Map (Table 4-13) Added the SIDL bit to the DMA Global Register Map (Table 4-17). Changed the CM bit to CMR in the System Control Register Map (Table 4-23). Added the following devices to the I2C2, SPI1, PORTA, PORTC, PORTD, PORTE, PORTF, PORTG, Change Notice and Pull-up Register Maps (Table 4-12, Table 4-14, Table 4-24, Table 4-27, Table 4-29, Table 4-31, Table 4-33, Table 4-35 and Table 4-36): • PIC32MX534F064L • PIC32MX564F064L • PIC32MX564F128L • PIC32MX664F064L • PIC32MX664F128L • PIC32MX764F128L Added the following devices to the PORTC, PORTD, PORTE, PORTF, PORTG, Change Notice and Pull-up Register Maps (Table 4-26, Table 4-28, Table 4-30, Table 4-32, Table 4-34 and Table 4-37): • PIC32MX534F064H • PIC32MX564F064H • PIC32MX564F128H • PIC32MX664F064H • PIC32MX664F128H • PIC32MX764F128H Added the following devices to the CAN1 Register Map (Table 4-45): • PIC32MX534F064H • PIC32MX564F064H • PIC32MX564F128H • PIC32MX764F128H • PIC32MX534F064L • PIC32MX564F064L • PIC32MX564F128L • PIC32MX764F128L Added the following devices to the Ethernet Controller Register Map (Table 4-47): • PIC32MX664F064H • PIC32MX664F128H • PIC32MX764F128H • PIC32MX664F064L • PIC32MX664F128L • PIC32MX764F128L

© 2009-2013 Microchip Technology Inc.

TABLE B-3: MAJOR SECTION UPDATES (CONTINUED)

Section Name	Update Description
1.0 “Electrical Characteristics”	Updated the Typical and Maximum DC Characteristics: Operating Current (I_{DD}) in Table 1-5. Updated the Typical and Maximum DC Characteristics: Idle Current (I_{IDLE}) in Table 1-6. Updated the Typical and Maximum DC Characteristics: Power-Down Current (I_{PD}) in Table 1-7. Added DC Characteristics: Program Memory parameters D130a and D132a in Table 1-11. Added the Internal Voltage Reference parameter (D305) to the Comparator Specifications in Table 1-13.

Revision E (July 2010)

Minor corrections were incorporated throughout the document.

Revision F (December 2010)

The revision includes the following global update:

VCAP/VDDCORE has been changed to: VCAP/VCORE

Other major changes are referenced by their respective chapter/section in Table B-4:

TABLE B-4: SECTION UPDATES

Section Name	Update Description
High-Performance, USB, CAN and Ethernet 32-bit Flash Microcontrollers	Removed the following Analog Feature: FV tolerant input pins (digital pins only) Updated the term LIN 1.2 support as LIN support for the peripheral feature: Six UART modules with: RS-232, RS-485, and LIN support
1.0 “Device Overview”	Updated the value of 64-pin QFN/TQFP pin number for the following pin names: PMA0, PMA1 and ECRSDV
4.0 “Memory Organization”	The following register map tables were updated: • Table 4-2: - Changed bits 24/8 to I2C5BIF in IFS1 - Changed bits 24/8-24/10 to SRIPL<2:0> in INTSTAT - Changed bits 25/9/-24/8 to U5IS<1:0> in IPC12 - Added note 2 • Table 4-3 through Table 4-7: - Changed bits 24/8-24/10 to SRIPL<2:0> in INTSTAT - Changed bits 25/9-24/8 to U5IS<1:0> in IPC12 • Table 4-3: - Changed bits 24/8 to I2C5BIF in IFS1 - Added note 2 • Table 4-4: - Changed bits 24/8 to I2C5BIF in IFS1 - Changed bits 24/8 to I2C5BIE in IEC1 - Added note 2 references • Table 4-5: - Changed bits 24/8 to I2C5BIF in IFS1 - Changed bits 24/8 to I2C5BIE in IEC1 - Added note 2 references • Table 4-6: - Changed bit 24/8 to I2C5BIF in IFS1 - Updated the bit value of bit 24/8 as I2C5BIE for the IEC1 register. - Added note 2 • Table 4-7: - Changed bit 25/9 to I2C5SIF in IFS1 - Changed bit 24/8 as I2C5BIF in IFS1 - Changed bit 25/9 as I2C5SIE in IEC1 - Changed bit 24/8 as I2C5BIE in IEC1 - Added note 2 references • Added note 2 to Table 4-8 • Updated the All Resets values for the following registers in Table 4-11: I2C3CON, I2C4CON, I2C5CON and I2C1CON. • Updated the All Resets values for the I2C2CON register in Table 4-12

© 2009-2013 Microchip Technology Inc.

TABLE B-4: SECTION UPDATES (CONTINUED)

Section Name	Update Description
4.0 “Memory Organization” (Continued)	• Table 4-13: - Changed register U4RG to U1BRG - Changed register U5RG to U3BRG - Changed register U6RG to U2BRG • Table 4-14: - Updated the All Resets values for the following registers: SPI3STAT, SPI2STAT and SPI4STAT • Table 4-15: Updated the All Resets values for the SPI1STAT register • Table 4-17: Added note 2 • Table 4-19: Added note 2 • Table 4-20: Updated the All Resets values for the CM1CON and CM2CON registers • Table 4-21: - Updated the All Resets values as `0000` for the CVRCON register - Updated note 2 • Table 4-38: Updated the All Resets values for the PMSTAT register • Table 4-40: Updated the All Resets values for the CHECON and CHETAG registers • Table 4-42: Updated the bit value of bit 29/13 as ‘—’ for the DEVCFG3 register • Table 4-44: - Updated the note references in the entire table - Changed existing note 1 to note 4 - Added notes 1, 2 and 3 - Changed bits 23/7 in U1PWRC to UACTPND - Changed register U1DDR to U1ADDR - Changed register U4DTP1 to U1BDTP1 - Changed register U4DTP2 to U1BDTP2 - Changed register U4DTP3 to U1BDTP3 • Table 4-45: - Updated the All Resets values for the C1CON and C1VEC registers - Changed bits 30/14 in C1CON to FRZ - Changed bits 27/11 in C1CON to CANBUSY - Changed bits 22/6-16/0 in C1VEC to ICODE<6:0> - Changed bits 22/6-16/0 in C1TREC to RERRCNT<7:0> - Changed bits 31/15-24/8 in C1TREC to TERRCNT<7:0> • Table 4-46: - Updated the All Resets values for the C2CON and C2VEC registers - Changed bits 30/14 in C1CON to FRZ - Changed bits 27/11 in C1CON to CANBUSY - Changed bits 22/6-16/0 in C1VEC register to ICODE<6:0> - Changed bits 22/6-16/0 in C1TREC register to RERRCNT<7:0> - Changed bits 31/15-24/8 in C1TREC to TERRCNT<7:0>

TABLE B-4: SECTION UPDATES (CONTINUED)

Section Name	Update Description
7.0 “Interrupt Controller”	• Updated the following Interrupt Sources in Table 7-1: - Changed IC2AM – I2C4 Master Event to: IC4M – I2C4 Master Event - Changed IC3AM – I2C5 Master Event to: IC5M – I2C4 Master Event - Changed U1E – UART1A Error to: U1E – UART1 Error - Changed U4E – UART1B Error to: U4E – UART4 Error - Changed U1RX – UART1A Receiver to: U1RX – UART1 Receiver - Changed U4RX – UART1B Receiver to: U4RX – UART4 Receiver - Changed U1TX – UART1A Transmitter to: U1TX – UART1 Transmitter - Changed U4TX – UART1B Transmitter to: U4TX – UART4 Transmitter - Changed U6E – UART2B Error to: U6E – UART6 Error - Changed U6RX – UART2B Receiver to: U6RX – UART6 Receiver - Changed U6TX – UART2B Transmitter to: U6TX – UART6 Transmitter - Changed U5E – UART3B Error to: U5E – UART5 Error - Changed U5RX – UART3B Receiver to: U5RX – UART5 Receiver - Changed U5TX – UART3B Transmitter to: U5TX – UART5 Transmitter
1.0 “Oscillator Configuration”	Updated Figure 1-1
1.0 “Output Compare”	Updated Figure 1-1
1.0 “Ethernet Controller”	Added a note on using the Ethernet controller pins (see note above Table 1-3)
1.0 “Comparator Voltage Reference (CVREF)”	Updated the note in Figure 1-1
1.0 “Special Features”	Updated the bit description for bit 10 in Register 1-2 Added notes 1 and 2 to Register 1-4
1.0 “Electrical Characteristics”	Updated the Absolute Maximum Ratings: • Voltage on any 5V tolerant pin with respect to VSS when VDD < 2.3V - 0.3V to +3.6V was updated • Voltage on VBUS with respect to VSS - 0.3V to +5.5V was added Updated the maximum value of DC16 as 2.1 in Table 1-4 Updated the Typical values for the following parameters: DC20b, DC20c, DC21c, DC22c and DC23c (see Table 1-5) Updated Table 1-11: • Removed the following DC Characteristics: Programming temperature 0°C ≤ TA ≤ +70°C (25°C recommended) • Updated the Minimum value for the Parameter number D131 as 2.3 • Removed the Conditions for the following Parameter numbers: D130, D131, D132, D135, D136 and D137 • Updated the condition for the parameter number D130a and D132a Updated the Minimum, Typical and Maximum values for parameter D305 in Table 1-13 Added note 2 to Table 1-18 Updated the Minimum and Maximum values for parameter F20b (see Table 1-19) Updated the following figures: • Figure 1-4 • Figure 1-9 • Figure 1-22 • Figure 1-23
Appendix A: “Migrating from PIC32MX3XX/4XX to PIC32MX5XX/6XX/7XX Devices”	Removed the A.3 Pin Assignments sub-section.

© 2009-2013 Microchip Technology Inc.

Revision G (May 2011)

The revision includes the following global update:

- All references to VDDCORE/VCAP have been changed to: VCORE/VCAP
- Added references to the new V-Temp temperature range: -40ºC to +105ºC

This revision also includes minor typographical and formatting changes throughout the data sheet text. Major updates are referenced by their respective section in Table B-5.

TABLE B-5: MAJOR SECTION UPDATES

Section Name	Update Description
High-Performance, USB, CAN and Ethernet 32-bit Flash Microcontrollers	Removed the shading for all D- and D+ pins in all pin diagrams.
1.0 "Device Overview"	Updated the VBUS description in Table 1-1.
1.0 "Guidelines for Getting Started with 32-bit Microcontrollers"	Added **"Alternatively, inputs can be reserved by connecting the pin to Vss through a 1k to 10k resistor and configuring the pin as an input."**.
4.0 "Memory Organization"	Added Note 3 to the Interrupt Register Map tables (see Table 4-2 through Table 4-7.
22.0 "10-bit Analog-to-Digital Converter (ADC)"	Updated the ADC Conversion Clock Period Block Diagram (see Figure 22-2).
1.0 "Comparator Voltage Reference (CVREF)"	Updated the Comparator Voltage Reference Block Diagram (see Figure 1-1).
1.0 "Special Features"	Removed the second paragraph from **1.3.1 "On-Chip Regulator and POR"**.
1.0 "Electrical Characteristics"	Added the new V-Temp temperature range (-40ºC to +105ºC) to the heading of all specification tables. Updated the Ambient temperature under bias, updated the Voltage on any 5V tolerant pin with respect to VSS when VDD < 2.3V, and added Voltage on VBUS with respect to Vss in Absolute Maximum Ratings. Added the characteristic, DC5a to Operating MIPS vs. Voltage (see Table 1-1). Updated or added the following parameters to the Operating Current (IDD) DC Characteristics: DC20, DC20b, DC23, and DC23b (see Table 1-5). Added the following parameters to the Idle Current (IIDLE) DC Characteristics: DC30b, DC33b, DC34c, DC35c, and DC36c (see Table 1-6). Added the following parameters to the Power-down Current (IPD) DC Characteristics: DC40g, DC40h, DC40i, and DC41g, (see Table 1-7). Added parameter IM51 and Note 3 to the I2Cx Bus Data Timing Requirements (Master Mode) (see Table 1-32). Updated the 10-bit ADC Conversion Rate Parameters (see Table 1-37). Updated parameter AD57 (TSAMP) in the Analog-to-Digital Conversion Timing Requirements (see Table 1-38).
1.0 "Packaging Information"	Updated the 64-Lead Plastic Quad Flat, No Lead Package (MR) – 9x9x0.9 mm Body [QFN] packing diagram.
Product Identification System	Added the new V-Temp (V) temperature information.

Revision H (March 2013)

This revision includes the following global updates:

- Where applicable, control register tables have been added to the document
- All references to VCORE were removed
- All occurrences of XBGA have been updated to: TFBGA
- All occurrences of VUSB have been updated to: VUSB3V3

This revision also includes minor typographical and formatting changes throughout the data sheet text.

All other significant changes are referenced by their respective section in Table B-6.

TABLE B-6: MAJOR SECTION UPDATES

Section Name	Update Description
"32-bit Microcontrollers (up to 512 KB Flash and 128 KB SRAM) with Graphics Interface, USB, CAN, and Ethernet"	Updated Core features. Added the VTLA to the Packages table. Added Note 5 to the Feature tables (see Table 1, Table 2, and Table 3).
Section 2.0 "Guidelines for Getting Started with 32-bit MCUs"	The Recommended Minimum Connection was updated (see Figure 2-1).
Section 5.0 "Flash Program Memory"	A note regarding Flash page size and row size was added.
Section 8.0 "Oscillator Configuration"	The RP resistor was added and Note 1 was updated in the Oscillator Diagram (see Figure 8-1).
Section 31.0 "Electrical Characteristics"	Added Note 1 to Operating MIPS vs. Voltage (see Table 31-1). Added the VTLA package to Thermal Packaging Characteristics (see Table 31-3). Added Note 2 to DC Temperature and Voltage Specifications (see Table 31-4). Updated Note 2 in the Operating Current DC Characteristics (see Table 31-5). Updated Note 1 in the Idle Current DC Characteristics (see Table 31-6). Updated Note 1 in the Power-Down Current DC Characteristics (see Table 31-7). Updated the I/O Pin Output Specifications (see Table 31-9). Added Note 2 to the BOR Electrical Characteristics (see Table 31-10). Added Note 3 to the Comparator Specifications (see Table 31-13). Parameter D320 (VCORE) was removed (see Table 31-15). Updated the Minimum value for parameter OS50 (see Table 31-18). Parameter SY01 (TPWRT) was removed (see Table 31-22). Note 1 was added and the conditions for parameters ET3, ET4, ET7, and ET9 were updated in the Ethernet Module Specifications (see Table 31-35). Added Note 6 to the ADC Module Specifications (see Table 31-36). Added Note 3 to the 10-bit ADC Conversion Rate Parameter (see Table 31-37). Added Note 4 to the Analog-to-Digital Conversion Timing Requirements (see Table 31-38). The following figures were added: • **Figure 31-19: "MDIO Sourced by the PIC32 Device"** • **Figure 31-21: "Transmit Signal Timing Relationships at the MII"** • **Figure 31-22: "Receive Signal Timing Relationships at the MII"**

© 2009-2013 Microchip Technology Inc.

TABLE B-6: MAJOR SECTION UPDATES (CONTINUED)

Section Name	Update Description
Section 32.0 "DC and AC Device Characteristics Graphs"	This new chapter was added.
Section 33.0 "Packaging Information"	Added the 124-lead VTLA package information (see **Section 33.1 "Package Marking Information"** and **Section 33.2 "Package Details"**).
"Product Identification System"	Added the TL definition for VTLA packages.

NOTES:

© 2009-2013 Microchip Technology Inc.

INDEX

A

AC Characteristics 374
    10-bit Conversion Rate Parameters 398
    ADC Specifications 396
    Analog-to-Digital Conversion Requirements 399
    EJTAG Timing Requirements 406
    Ethernet 394
    Internal FRC Accuracy 376
    Internal RC Accuracy 377
    OTG Electrical Specifications 405
    Parallel Master Port Read Requirements 403
    Parallel Master Port Write 404
    Parallel Master Port Write Requirements 404
    Parallel Slave Port Requirements 402
    PLL Clock Timing 376
Analog-to-Digital Converter (ADC) 247
Assembler
    MPASM Assembler 356

B

Block Diagrams
    ADC1 Module 247
    Comparator I/O Operating Modes 331
    Comparator Voltage Reference 335
    Connections for On-Chip Voltage Regulator 350
    Core and Peripheral Modules 33
    DMA 157
    Ethernet Controller 289
    I2C Circuit 218
    Input Capture 205
    Interrupt Controller 131
    JTAG Programming, Debugging and Trace Ports 350
    MCU 49
    Output Compare Module 209
    PIC32 CAN Module 255
    PMP Pinout and Connections to External Devices 229
    Prefetch Module 147
    Reset System 127
    RTCC 237
    SPI Module 211
    Timer1 197
    Timer2/3/4/5 (16-Bit) 201
    Typical Multiplexed Port Structure 193
    UART 223
    WDT and Power-up Timer 348
Brown-out Reset (BOR)
    and On-Chip Voltage Regulator 350

C

C Compilers
    MPLAB C18 356
Clock Diagram 141
Comparator
    Specifications 372
Comparator Module 331
Comparator Voltage Reference (CVref 335
Configuration Bits 339
Controller Area Network (CAN) 255
CPU Module 45
Customer Change Notification Service 443
Customer Notification Service 443
Customer Support 443

D

DC and AC Characteristics
    Graphs and Tables 407
DC Characteristics 360
    I/O Pin Input Specifications 368
    I/O Pin Output Specifications 370
    Idle Current (IIDLE) 364
    Power-Down Current (IPD) 366
    Program Memory 371
    Temperature and Voltage Specifications 361
Development Support 355
Direct Memory Access (DMA) Controller 157

E

Electrical Characteristics 359
    AC 374
Errata 30
Ethernet Controller 289
ETHPMM0 (Ethernet Controller Pattern Match Mask 0) 296
ETHPMM1 (Ethernet Controller Pattern Match Mask 1) 296
External Clock
    Timer1 Timing Requirements 380
    Timer2, 3, 4, 5 Timing Requirements 381
    Timing Requirements 375

F

Flash Program Memory 123
    RTSP Operation 123

I

I/O Ports 193
    Parallel I/O (PIO) 194
Input Capture 205
Instruction Set 353
Inter-Integrated Circuit (I2C) 217
Internal Voltage Reference Specifications 373
Internet Address 443
Interrupt Controller 131
    IRG, Vector and Bit Location 132

M

MCU
    Architecture Overview 50
    Coprocessor 0 Registers 51
    Core Exception Types 52
    EJTAG Debug Support 53
    Power Management 53
MCU Module 49
Memory Map 60
Memory Maps 56, 57, 58, 59, 61
Memory Organization 55
    Layout 55
Microchip Internet Web Site 443
Migration
    PIC32MX3XX/4XX to PIC32MX5XX/6XX/7XX 425
MPLAB ASM30 Assembler, Linker, Librarian 356
MPLAB Integrated Development Environment Software 355
MPLAB PM3 Device Programmer 358
MPLAB REAL ICE In-Circuit Emulator System 357
MPLINK Object Linker/MPLIB Object Librarian 356

O

Open-Drain Configuration 194
Oscillator Configuration 141

Output Compare 209

P

Packaging 409
Details 411
Marking 409
Parallel Master Port (PMP) 229
PIC32 Family USB Interface Diagram 174
Pinout I/O Descriptions (table) 34
Power-on Reset (POR)
and On-Chip Voltage Regulator 350
Power-Saving Features 337
CPU Halted Methods 337
Operation 337
with CPU Running 337
Prefetch Cache 147
Program Flash Memory
Wait State Characteristics 371

R

Reader Response 444
Real-Time Clock and Calendar (RTCC) 237
Register Maps 62–116
Registers
AD1CHS (ADC Input Select) 253
AD1CON1 (ADC Control 1) 249
AD1CON2 (ADC Control 2) 251
AD1CON3 (ADC Control 3) 252
AD1CSSL (ADC Input Scan Select) 254
ALRMDATE (Alarm Date Value) 245
ALRMTIME (Alarm Time Value) 244
BMXBOOTSZ (Boot Flash (IFM) Size) 122
BMXCON (Bus Matrix Configuration) 117
BMXDKPBA (Data RAM Kernel Program
Base Address) 118
BMXDRMSZ (Data RAM Size) 121
BMXDUDBA (Data RAM User Data Base Address) . 119
BMXDUPBA (Data RAM User Program
Base Address) 120
BMXPFMSZ (Program Flash (PFM) Size) 122
BMXPUPBA (Program Flash (PFM) User Program
Base Address) 121
CHEACC (Cache Access) 149
CHECON (Cache Control) 148
CHEHIT (Cache Hit Statistics) 154
CHELRU (Cache LRU) 153
CHEMIS (Cache Miss Statistics) 154
CHEMSK (Cache TAG Mask) 151
CHETAG (Cache TAG) 150
CHEW0 (Cache Word 0) 151
CHEW1 (Cache Word 1) 152
CHEW2 (Cache Word 2) 152
CHEW3 (Cache Word 3) 153
CiCFG (CAN Baud Rate Configuration) 258
CiCON (CAN Module Control) 256
CiFIFOBA (CAN Message Buffer Base Address) 283
CiFIFOCINn (CAN Module Message Index Register ‘n’)
288
CiFIFOCONn (CAN FIFO Control Register ‘n’) 284
CiFIFOINTn (CAN FIFO Interrupt Register ‘n’) 286
CiFIFOUAn (CAN FIFO User Address Register ‘n’).. 288
CiFLTCON0 (CAN Filter Control 0) 266
CiFLTCON1 (CAN Filter Control 1) 268
CiFLTCON2 (CAN Filter Control 2) 270
CiFLTCON3 (CAN Filter Control 3) 272
CiFLTCON4 (CAN Filter Control 4) 274
CiFLTCON5 (CAN Filter Control 5) 276
CiFLTCON6 (CAN Filter Control 6) 278
CiFLTCON7 (CAN Filter Control 7) 280
CiFSTAT (CAN FIFO Status) 263
CiINT (CAN Interrupt) 260
CiRXFn (CAN Acceptance Filter ‘n’) 282
CiRXMn (CAN Acceptance Filter Mask ‘n’) 265
CiRXOVF (CAN Receive FIFO Overflow Status) 264
CiTMR (CAN Timer) 264
CiTREC (CAN Transmit/Receive Error Count) 263
CiVEC (CAN Interrupt Code) 262
CMSTAT (Comparator Control Register) 333
CMxCON (Comparator ’x’ Control) 332
CNCON (Change Notice Control) 195
CVRCON (Comparator Voltage Reference Control) 336
DCHxCON (DMA Channel ’x’ Control) 163
DCHxCPTR (DMA Channel ’x’ Cell Pointer) 170
DCHxCSIZ (DMA Channel ’x’ Cell-Size) 170
DCHxDAT (DMA Channel ’x’ Pattern Data) 171
DCHxDPTR (Channel ’x’ Destination Pointer) 169
DCHxDSA (DMA Channel ’x’ Destination
Start Address) 167
DCHxDSIZ (DMA Channel ’x’ Destination Size) 168
DCHxECON (DMA Channel ’x’ Event Control) 164
DCHxINT (DMA Channel ’x’ Interrupt Control) 165
DCHxSPTR (DMA Channel ’x’ Source Pointer) 169
DCHxSSA (DMA Channel ’x’ Source Start Address) 167
DCHxSSIZ (DMA Channel ’x’ Source Size) 168
DCRCCON (DMA CRC Control) 160
DCRCDATA (DMA CRC Data) 162
DCRCXOR (DMA CRCXOR Enable) 162
DDPCON (Debug Data Port Control) 351
DEVCFG0 (Device Configuration Word 0) 340
DEVCFG1 (Device Configuration Word 1) 342
DEVCFG2 (Device Configuration Word 2) 344
DEVCFG3 (Device Configuration Word 3) 346
DEVID (Device and Revision ID) 347
DMAADDR (DMA Address) 159
DMACON (DMA Controller Control) 158
DMASTAT (DMA Status) 159
EMAC1CFG1 (Ethernet Controller MAC Configuration 1)
313
EMAC1CFG2 (Ethernet Controller MAC Configuration 2)
314
EMAC1CLRT (Ethernet Controller MAC Collision Window/Retry Limit) 318
EMAC1IPGR (Ethernet Controller MAC Non-Back-to-Back Interpacket Gap) 317
EMAC1IPGT (Ethernet Controller MAC Back-to-Back Interpacket Gap) 316
EMAC1MADR (Ethernet Controller MAC MII Management Address) 324
EMAC1MAXF (Ethernet Controller MAC Maximum Frame Length) 319
EMAC1MCFG (Ethernet Controller MAC MII Management Configuration) 322
EMAC1MCMD (Ethernet Controller MAC MII Management Command) 323
EMAC1MIND (Ethernet Controller MAC MII Management Indicators) 326
EMAC1MRDD (Ethernet Controller MAC MII Management Read Data) 325
EMAC1MWTD (Ethernet Controller MAC MII Management Write Data) 325

© 2009-2013 Microchip Technology Inc.

EMAC1SA0 (Ethernet Controller MAC Station Address 0) ... 327
EMAC1SA1 (Ethernet Controller MAC Station Address 1) ... 328
EMAC1SA2 (Ethernet Controller MAC Station Address 2) ... 329
EMAC1SUPP (Ethernet Controller MAC PHY Support) . 320
EMAC1TEST (Ethernet Controller MAC Test) ... 321
ETHALGNERR (Ethernet Controller Alignment Errors Statistics) ... 312
ETHCON1 (Ethernet Controller Control 1) ... 291
ETHCON2 (Ethernet Controller Control 2) ... 293
ETHFCSERR (Ethernet Controller Frame Check Sequence Error Statistics) ... 311
ETHFRMRXOK (Ethernet Controller Frames Received OK Statistics) ... 310
ETHFRMTXOK (Ethernet Controller Frames Transmitted OK Statistics) ... 307
ETHHT0 (Ethernet Controller Hash Table 0) ... 295
ETHHT1 (Ethernet Controller Hash Table 1) ... 295
ETHIEN (Ethernet Controller Interrupt Enable) ... 301
ETHIRQ (Ethernet Controller Interrupt Request) ... 302
ETHMCOLFRM (Ethernet Controller Multiple Collision Frames Statistics) ... 309
ETHPM0 (Ethernet Controller Pattern Match Offset) 297
ETHPMCS (Ethernet Controller Pattern Match Checksum) ... 297
ETHRXFC (Ethernet Controller Receive Filter Configuration) ... 298
ETHRXOVFLOW (Ethernet Controller Receive Overflow Statistics) ... 306
ETHRXST (Ethernet Controller RX Packet Descriptor Start Address) ... 294
ETHRXWM (Ethernet Controller Receive Watermarks) . 300
ETHSCOLFRM (Ethernet Controller Single Collision Frames Statistics) ... 308
ETHSTAT (Ethernet Controller Status) ... 304
ETHTXST (Ethernet Controller TX Packet Descriptor Start Address) ... 294
I2CxCON (I2C Control) ... 219
I2CxSTAT (I2C Status) ... 221
ICxCON (Input Capture 'x' Control) ... 206
IECx (Interrupt Enable Control) ... 137
IFSx (Interrupt Flag Status) ... 137
INTCON (Interrupt Control) ... 135
INTSTAT (Interrupt Status) ... 136
IPCx (Interrupt Priority Control) ... 138
NVMADDR (Flash Address) ... 125
NVMCON (Programming Control) ... 124
NVMDATA (Flash Program Data) ... 126
NVMKEY (Programming Unlock) ... 125
NVMSRCADDR (Source Data Address) ... 126
OCxCON (Output Compare 'x' Control) ... 210
OSCCON (Oscillator Control) ... 142
OSCTUN (FRC Tuning) ... 145
PFABT (Prefetch Cache Abort Statistics) ... 155
PMADDR (Parallel Port Address) ... 234
PMAEN (Parallel Port Pin Enable) ... 235
PMCON (Parallel Port Control) ... 230
PMMODE (Parallel Port Mode) ... 232
PMSTAT (Parallel Port Status (Slave Modes only) ... 236
RCON (Reset Control) ... 128
RSWRST (Software Reset) ... 129
RTCCON (RTC Control) ... 238
RTCDATE (RTC Date Value) ... 243
RTCTIME (RTC Time Value) ... 242
SPIxCON (SPI Control) ... 212
SPIxSTAT (SPI Status) ... 214
T1CON (Type A Timer Control) ... 198
TPTMR (Temporal Proximity Timer) ... 136
TxCON (Type B Timer Control) ... 203
U1ADDR (USB Address) ... 187
U1BDTP1 (USB BDT Page 1) ... 189
U1BDTP2 (USB BDT Page 2) ... 190
U1BDTP3 (USB BDT Page 3) ... 190
U1CNFG1 (USB Configuration 1) ... 191
U1CON (USB Control) ... 185
U1EIE (USB Error Interrupt Enable) ... 183
U1EIR (USB Error Interrupt Status) ... 182
U1EP0-U1EP15 (USB Endpoint Control) ... 192
U1FRMH (USB Frame Number High) ... 188
U1FRML (USB Frame Number Low) ... 187
U1IE (USB Interrupt Enable) ... 181
U1IR (USB Interrupt) ... 180
U1OTGCON (USB OTG Control) ... 178
U1OTGIE (USB OTG Interrupt Enable) ... 176
U1OTGIR (USB OTG Interrupt Status) ... 175
U1OTGSTAT (USB OTG Status) ... 177
U1PWRC (USB Power Control) ... 179
U1SOF (USB SOF Threshold) ... 189
U1STAT (USB Status) ... 184
U1TOK (USB Token) ... 188
UxMODE (UARTx Mode) ... 225
UxSTA (UARTx Status and Control) ... 227
WDTCON (Watchdog Timer Control) ... 349
Resets ... 127
Revision History ... 426
RTCALRM (RTC ALARM Control) ... 240

S

Serial Peripheral Interface (SPI) ... 211
Software Simulator (MPLAB SIM) ... 357
Special Features ... 339

T

Timer1 Module ... 197
Timer2/3, Timer4/5 Modules ... 201
Timing Diagrams
10-bit Analog-to-Digital Conversion (ASAM = 0, SSRC<2:0> = 000) ... 400
10-bit Analog-to-Digital Conversion (ASAM = 1, SSRC<2:0> = 111, SAMC<4:0> = 00001) ... 401
CAN I/O ... 393
EJTAG ... 406
External Clock ... 374
I/O Characteristics ... 377
I2Cx Bus Data (Master Mode) ... 389
I2Cx Bus Data (Slave Mode) ... 391
I2Cx Bus Start/Stop Bits (Master Mode) ... 389
I2Cx Bus Start/Stop Bits (Slave Mode) ... 391
Input Capture (CAPx) ... 382
OCx/PWM ... 383
Output Compare (OCx) ... 382
Parallel Master Port Read ... 403
Parallel Master Port Write ... 404
Parallel Slave Port ... 402
SPIx Master Mode (CKE = 0) ... 384
SPIx Master Mode (CKE = 1) ... 385
SPIx Slave Mode (CKE = 0) ... 386

SPIx Slave Mode (CKE = 1)..... 387
Timer1, 2, 3, 4, 5 External Clock..... 380
UART Reception 224
UART Transmission (8-bit or 9-bit Data)..... 224
Timing Requirements
CLKO and I/O 377
Timing Specifications
CAN I/O Requirements 393
I2Cx Bus Data Requirements (Master Mode) 390
I2Cx Bus Data Requirements (Slave Mode) 392
Input Capture Requirements..... 382
Output Compare Requirements 382
Simple OCx/PWM Mode Requirements..... 383
SPIx Master Mode (CKE = 0) Requirements 384
SPIx Master Mode (CKE = 1) Requirements 385
SPIx Slave Mode (CKE = 1) Requirements 387
SPIx Slave Mode Requirements (CKE = 0) 386

U

UART 223
USB On-The-Go (OTG) 173

V

VCAP pin 350
Voltage Reference Specifications 373
Voltage Regulator (On-Chip)..... 350

W

Watchdog Timer (WDT) 348
WWW Address..... 443
WWW, On-Line Support..... 30

© 2009-2013 Microchip Technology Inc.

THE MICROCHIP WEB SITE

Microchip provides online support via our WWW site at www.microchip.com. This web site is used as a means to make files and information easily available to customers. Accessible by using your favorite Internet browser, the web site contains the following information:

- **Product Support** – Data sheets and errata, application notes and sample programs, design resources, user's guides and hardware support documents, latest software releases and archived software
- **General Technical Support** – Frequently Asked Questions (FAQs), technical support requests, online discussion groups, Microchip consultant program member listing
- **Business of Microchip** – Product selector and ordering guides, latest Microchip press releases, listing of seminars and events, listings of Microchip sales offices, distributors and factory representatives

CUSTOMER CHANGE NOTIFICATION SERVICE

Microchip's customer notification service helps keep customers current on Microchip products. Subscribers will receive e-mail notification whenever there are changes, updates, revisions or errata related to a specified product family or development tool of interest.

To register, access the Microchip web site at www.microchip.com. Under "Support", click on "Customer Change Notification" and follow the registration instructions.

CUSTOMER SUPPORT

Users of Microchip products can receive assistance through several channels:

- Distributor or Representative
- Local Sales Office
- Field Application Engineer (FAE)
- Technical Support
- Development Systems Information Line

Customers should contact their distributor, representative or field application engineer (FAE) for support. Local sales offices are also available to help customers. A listing of sales offices and locations is included in the back of this document.

Technical support is available through the web site at: http://microchip.com/support

READER RESPONSE

It is our intention to provide you with the best documentation possible to ensure successful use of your Microchip product. If you wish to provide your comments on organization, clarity, subject matter, and ways in which our documentation can better serve you, please FAX your comments to the Technical Publications Manager at (480) 792-4150.

Please list the following information, and use this outline to provide us with your comments about this document.

TO: Technical Publications Manager

RE: Reader Response

Total Pages Sent _____

From: Name _____

Company _____

Address _____

City / State / ZIP / Country _____

Telephone: (_____) _____ - _____ FAX: (_____) _____ - _____

Application (optional):

Would you like a reply? ___Y ___N

Device: PIC32MX5XX/6XX/7XX

Literature Number: DS60001156H

Questions:

1. What are the best features of this document?

_____

_____

2. How does this document meet your hardware and software development needs?

_____

_____

3. Do you find the organization of this document easy to follow? If not, why?

_____

_____

4. What additions to the document do you think would enhance the structure and subject?

_____

_____

5. What deletions from the document could be made without affecting the overall usefulness?

_____

_____

6. Is there any incorrect or misleading information (what and where)?

_____

_____

7. How would you improve this document?

_____

_____

© 2009-2013 Microchip Technology Inc.

PRODUCT IDENTIFICATION SYSTEM

To order or obtain information, e.g., on pricing or delivery, refer to the factory or the listed sales office.

PIC32 MX 5XX F 512 H T - 80 I / PT - XXX

- **Microchip Brand** — PIC32
- **Architecture** — MX
- **Product Groups** — 5XX
- **Flash Memory Family** — F
- **Program Memory Size (KB)** — 512
- **Pin Count** — H
- **Tape and Reel Flag (if applicable)** — T
- **Speed** — 80
- **Temperature Range** — I
- **Package** — PT
- **Pattern** — XXX

Example:

PIC32MX575F256H-80I/PT:
General purpose PIC32,
32-bit RISC MCU,
256 KB program memory,
64-pin, Industrial temperature,
TQFP package.

Flash Memory Family

Architecture	MX	= 32-bit RISC MCU core
Product Groups	5XX	= General purpose microcontroller family
	6XX	= General purpose microcontroller family
	7XX	= General purpose microcontroller family
Flash Memory Family	F	= Flash program memory
Program Memory Size	256	= 256K
	512	= 512K
Pin Count	H	= 64-pin
	L	= 100-pin
Speed	80	= 80 MHz
Temperature Range	I	= -40°C to +85°C (Industrial)
	V	= -40°C to +105°C (V-Temp)
Package	PT	= 64-Lead (10x10x1 mm) TQFP (Thin Quad Flatpack)
	PT	= 100-Lead (12x12x1 mm) TQFP (Thin Quad Flatpack)
	PF	= 100-Lead (14x14x1 mm) TQFP (Thin Quad Flatpack)
	MR	= 64-Lead (9x9x0.9 mm) QFN (Plastic Quad Flat)
	BG	= 121-Lead (10x10x1.1 mm) TFBGA (Plastic Thin Profile Ball Grid Array)
	TL	= 124-Lead (9x9x0.9 mm) VTLA (Very Thin Leadless Array)
Pattern	Three-digit QTP, SQTP, Code or Special Requirements (blank otherwise)	
	ES	= Engineering Sample

NOTES:

© 2009-2013 Microchip Technology Inc.

Note the following details of the code protection feature on Microchip devices:

- Microchip products meet the specification contained in their particular Microchip Data Sheet.
- Microchip believes that its family of products is one of the most secure families of its kind on the market today, when used in the intended manner and under normal conditions.
- There are dishonest and possibly illegal methods used to breach the code protection feature. All of these methods, to our knowledge, require using the Microchip products in a manner outside the operating specifications contained in Microchip's Data Sheets. Most likely, the person doing so is engaged in theft of intellectual property.
- Microchip is willing to work with the customer who is concerned about the integrity of their code.
- Neither Microchip nor any other semiconductor manufacturer can guarantee the security of their code. Code protection does not mean that we are guaranteeing the product as "unbreakable."

Code protection is constantly evolving. We at Microchip are committed to continuously improving the code protection features of our products. Attempts to break Microchip's code protection feature may be a violation of the Digital Millennium Copyright Act. If such acts allow unauthorized access to your software or other copyrighted work, you may have a right to sue for relief under that Act.

Information contained in this publication regarding device applications and the like is provided only for your convenience and may be superseded by updates. It is your responsibility to ensure that your application meets with your specifications. MICROCHIP MAKES NO REPRESENTATIONS OR WARRANTIES OF ANY KIND WHETHER EXPRESS OR IMPLIED, WRITTEN OR ORAL, STATUTORY OR OTHERWISE, RELATED TO THE INFORMATION, INCLUDING BUT NOT LIMITED TO ITS CONDITION, QUALITY, PERFORMANCE, MERCHANTABILITY OR FITNESS FOR PURPOSE**.** Microchip disclaims all liability arising from this information and its use. Use of Microchip devices in life support and/or safety applications is entirely at the buyer's risk, and the buyer agrees to defend, indemnify and hold harmless Microchip from any and all damages, claims, suits, or expenses resulting from such use. No licenses are conveyed, implicitly or otherwise, under any Microchip intellectual property rights.

QUALITY MANAGEMENT SYSTEM CERTIFIED BY DNV

= ISO/TS 16949 =

Trademarks

The Microchip name and logo, the Microchip logo, dsPIC, FlashFlex, KEELOQ, KEELOQ logo, MPLAB, PIC, PICmicro, PICSTART, PIC^{32} logo, rfPIC, SST, SST Logo, SuperFlash and UNI/O are registered trademarks of Microchip Technology Incorporated in the U.S.A. and other countries.

FilterLab, Hampshire, HI-TECH C, Linear Active Thermistor, MTP, SEEVAL and The Embedded Control Solutions Company are registered trademarks of Microchip Technology Incorporated in the U.S.A.

Silicon Storage Technology is a registered trademark of Microchip Technology Inc. in other countries.

Analog-for-the-Digital Age, Application Maestro, BodyCom, chipKIT, chipKIT logo, CodeGuard, dsPICDEM, dsPICDEM.net, dsPICworks, dsSPEAK, ECAN, ECONOMONITOR, FanSense, HI-TIDE, In-Circuit Serial Programming, ICSP, Mindi, MiWi, MPASM, MPF, MPLAB Certified logo, MPLIB, MPLINK, mTouch, Omniscient Code Generation, PICC, PICC-18, PICDEM, PICDEM.net, PICkit, PICtail, REAL ICE, rfLAB, Select Mode, SQI, Serial Quad I/O, Total Endurance, TSHARC, UniWinDriver, WiperLock, ZENA and Z-Scale are trademarks of Microchip Technology Incorporated in the U.S.A. and other countries.

SQTP is a service mark of Microchip Technology Incorporated in the U.S.A.

GestIC and ULPP are registered trademarks of Microchip Technology Germany II GmbH & Co. & KG, a subsidiary of Microchip Technology Inc., in other countries.

All other trademarks mentioned herein are property of their respective companies.

© 2009-2013, Microchip Technology Incorporated, Printed in the U.S.A., All Rights Reserved.

Printed on recycled paper.

ISBN: 978-1-162077-125-9

Microchip received ISO/TS-16949:2009 certification for its worldwide headquarters, design and wafer fabrication facilities in Chandler and Tempe, Arizona; Gresham, Oregon and design centers in California and India. The Company's quality system processes and procedures are for its PIC® MCUs and dsPIC® DSCs, KEELOQ® code hopping devices, Serial EEPROMs, microperipherals, nonvolatile memory and analog products. In addition, Microchip's quality system for the design and manufacture of development systems is ISO 9001:2000 certified.

Worldwide Sales and Service

AMERICAS

Corporate Office
2355 West Chandler Blvd.
Chandler, AZ 85224-6199
Tel: 480-792-7200
Fax: 480-792-7277
Technical Support:
http://www.microchip.com/support
Web Address:
www.microchip.com

Atlanta
Duluth, GA
Tel: 678-957-9614
Fax: 678-957-1455

Boston
Westborough, MA
Tel: 774-760-0087
Fax: 774-760-0088

Chicago
Itasca, IL
Tel: 630-285-0071
Fax: 630-285-0075

Cleveland
Independence, OH
Tel: 216-447-0464
Fax: 216-447-0643

Dallas
Addison, TX
Tel: 972-818-7423
Fax: 972-818-2924

Detroit
Farmington Hills, MI
Tel: 248-538-2250
Fax: 248-538-2260

Indianapolis
Noblesville, IN
Tel: 317-773-8323
Fax: 317-773-5453

Los Angeles
Mission Viejo, CA
Tel: 949-462-9523
Fax: 949-462-9608

Santa Clara
Santa Clara, CA
Tel: 408-961-6444
Fax: 408-961-6445

Toronto
Mississauga, Ontario, Canada
Tel: 905-673-0699
Fax: 905-673-6509

ASIA/PACIFIC

Asia Pacific Office
Suites 3707-14, 37th Floor
Tower 6, The Gateway
Harbour City, Kowloon
Hong Kong
Tel: 852-2401-1200
Fax: 852-2401-3431

Australia - Sydney
Tel: 61-2-9868-6733
Fax: 61-2-9868-6755

China - Beijing
Tel: 86-10-8569-7000
Fax: 86-10-8528-2104

China - Chengdu
Tel: 86-28-8665-5511
Fax: 86-28-8665-7889

China - Chongqing
Tel: 86-23-8980-9588
Fax: 86-23-8980-9500

China - Hangzhou
Tel: 86-571-2819-3187
Fax: 86-571-2819-3189

China - Hong Kong SAR
Tel: 852-2943-5100
Fax: 852-2401-3431

China - Nanjing
Tel: 86-25-8473-2460
Fax: 86-25-8473-2470

China - Qingdao
Tel: 86-532-8502-7355
Fax: 86-532-8502-7205

China - Shanghai
Tel: 86-21-5407-5533
Fax: 86-21-5407-5066

China - Shenyang
Tel: 86-24-2334-2829
Fax: 86-24-2334-2393

China - Shenzhen
Tel: 86-755-8864-2200
Fax: 86-755-8203-1760

China - Wuhan
Tel: 86-27-5980-5300
Fax: 86-27-5980-5118

China - Xian
Tel: 86-29-8833-7252
Fax: 86-29-8833-7256

China - Xiamen
Tel: 86-592-2388138
Fax: 86-592-2388130

China - Zhuhai
Tel: 86-756-3210040
Fax: 86-756-3210049

ASIA/PACIFIC

India - Bangalore
Tel: 91-80-3090-4444
Fax: 91-80-3090-4123

India - New Delhi
Tel: 91-11-4160-8631
Fax: 91-11-4160-8632

India - Pune
Tel: 91-20-2566-1512
Fax: 91-20-2566-1513

Japan - Osaka
Tel: 81-6-6152-7160
Fax: 81-6-6152-9310

Japan - Tokyo
Tel: 81-3-6880- 3770
Fax: 81-3-6880-3771

Korea - Daegu
Tel: 82-53-744-4301
Fax: 82-53-744-4302

Korea - Seoul
Tel: 82-2-554-7200
Fax: 82-2-558-5932 or
82-2-558-5934

Malaysia - Kuala Lumpur
Tel: 60-3-6201-9857
Fax: 60-3-6201-9859

Malaysia - Penang
Tel: 60-4-227-8870
Fax: 60-4-227-4068

Philippines - Manila
Tel: 63-2-634-9065
Fax: 63-2-634-9069

Singapore
Tel: 65-6334-8870
Fax: 65-6334-8850

Taiwan - Hsin Chu
Tel: 886-3-5778-366
Fax: 886-3-5770-955

Taiwan - Kaohsiung
Tel: 886-7-213-7828
Fax: 886-7-330-9305

Taiwan - Taipei
Tel: 886-2-2508-8600
Fax: 886-2-2508-0102

Thailand - Bangkok
Tel: 66-2-694-1351
Fax: 66-2-694-1350

EUROPE

Austria - Wels
Tel: 43-7242-2244-39
Fax: 43-7242-2244-393

Denmark - Copenhagen
Tel: 45-4450-2828
Fax: 45-4485-2829

France - Paris
Tel: 33-1-69-53-63-20
Fax: 33-1-69-30-90-79

Germany - Munich
Tel: 49-89-627-144-0
Fax: 49-89-627-144-44

Italy - Milan
Tel: 39-0331-742611
Fax: 39-0331-466781

Netherlands - Drunen
Tel: 31-416-690399
Fax: 31-416-690340

Spain - Madrid
Tel: 34-91-708-08-90
Fax: 34-91-708-08-91

UK - Wokingham
Tel: 44-118-921-5869
Fax: 44-118-921-5820

11/29/12

© 2009-2013 Microchip Technology Inc.