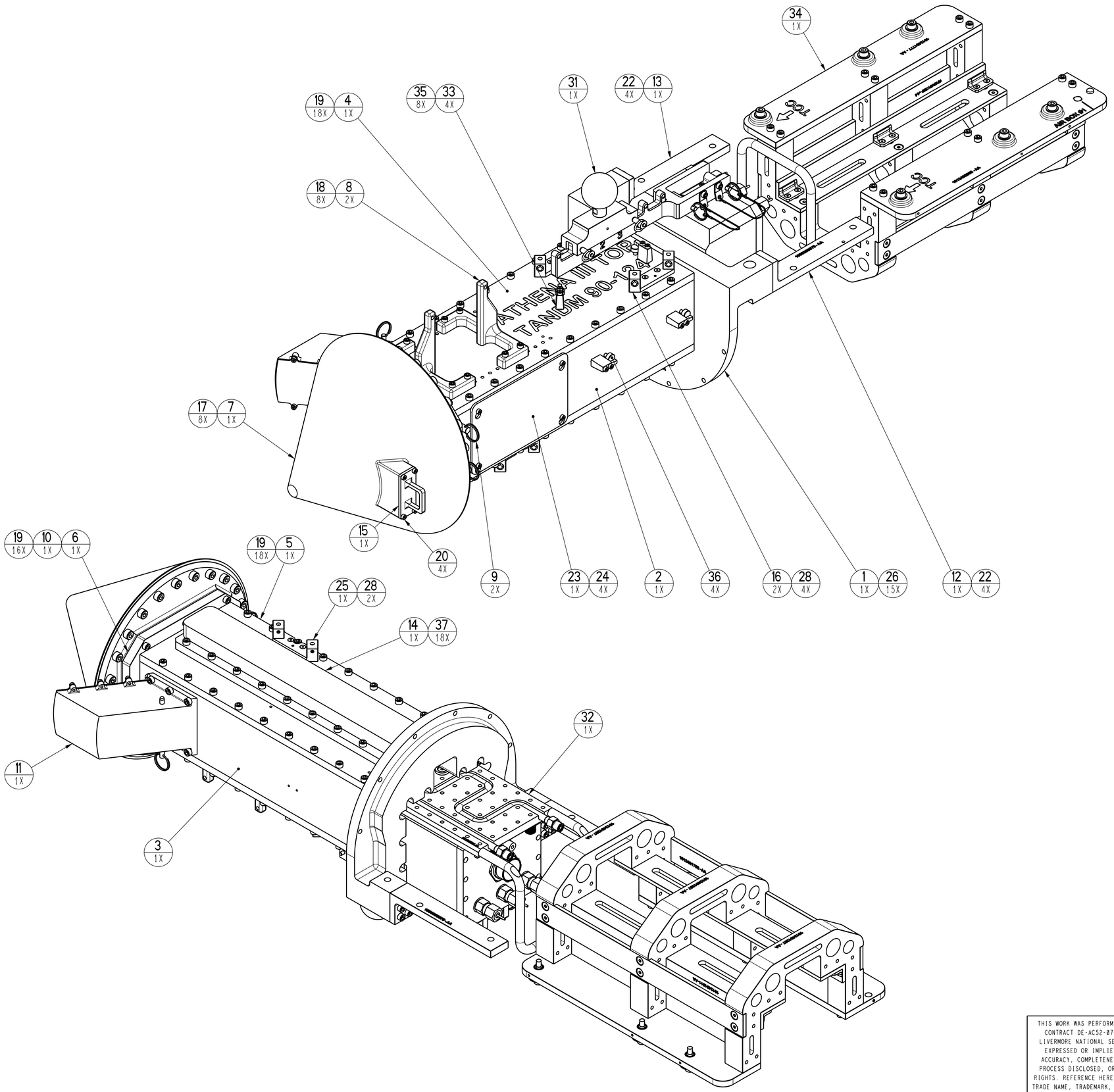

NOTES: UNLESS OTHERWISE SPECIFIED

101. ALL DIMENSIONS ARE IN MILLIMETERS (mm) AND VALUES ARE IN SI UNITS. DIMENSIONS AND VALUES IN BRACKETS ARE U.S. CUSTOMARY UNITS (inch) CONVERTED FROM MILLIMETERS / SI UNITS.

102. APPLICABLE STANDARDS AND SPECIFICATIONS:
ASME Y14.5-2009, DIMENSIONING AND TOLERANCING
ASME Y14.38, ABBREVIATIONS AND ACRONYMS

106. BAG AND TAG PART WITH DRAWING NUMBER, TABULATION NUMBER, REVISION LETTER, MANUFACTURER CAGE CODE, AND PART SERIAL NUMBER IF APPLICABLE.

109. ESTIMATED WEIGHT IS 87.247 kg [192.348 lb].

407. TORQUE VALUES TO BE SPECIFIED IN THE SAFETY NOTE OR ASSEMBLY PROCEDURE.

QTY REQD	IDENTIFYING NO.	NOMENCLATURE OR DESCRIPTION	MATERIAL SPECIFICATION	ITEM NO.
18	N5305-10265	SCR,CAP,HXS,VNT,M6X1X20	SST,A2-70	37
4	N5305-31034	SCR,TMB,KNR,M6X1X20	SST 303	36
8	N5305-55598	SCR,CAP,HXS,VNT,M4X0.7X30	SST,A2-70,Ag PLD	35
1	1012401724	LOADING STATION ASSY, ATHENA, 90-124	N/A	34
4	1012420741	SCREW CAPTURE, SNOUT BODY, ATHENA III	AL 6061-T6	33
1	1012092605	SLED, COOLING, AIRBOX MNTG, ATHENA III	N/A	32
1	1012092604	AIRBOX ASSY, ATHENA III	N/A	31
1	1012285042	GUIDE, BUMPER, DELRIN, SLED	DELRIN, WHITE	30
2	1011948682	GUIDE, DELRIN, SLED	DELRIN, WHITE	29
6	N5305-16872	SCR,FLT,HXS,90D,M4X0.7X14	SST,A2-70	28
2	1011948683	PAD, BUMPER, DELRIN	DELRIN, WHITE	27
15	N5305-10267	SCR,CAP,HXS,VNT,M6X1X30	SST,A2-70	26
1	1012137317	BRACKET ASSY, ATLAS, BTM 90-124, ATHENA	N/A	25
4	N5305-10184	SCR,CAP,HXS,M4X0.7X10	SST,A2-70	24
1	1009187446	DOOR, ATHENA II	AL 6061-T6	23
8	N5305-15398	SCR,CAP,HXS,VNT,M6X1X20	SST,A2-70,Ag PLD	22
4	N5305-10378	SCR,FLT,HXS,VNT,M3X0.5X8	SST,A2-70	21
4	N5305-28901	SCR,CAP,HXS,VNTD M4 X 0.7 X 12	SST,A2-70,Ag PLD	20
52	N5305-10266	SCR,CAP,HXS,VNT,M6X1X25	SST,A2-70	19
8	N5305-10194	SCR,CAP,HXS,M5X0.8X25	SST,A2-70	18
8	N5305-15400	SCR,CAP,HXS,VNT,M6X1X30	SST,A2-70,Ag PLD	17
2	1002994569	BRACKET ASSY, ATLAS, RU, XTRRA, 90-124	N/A	16
1	1007547031	FILTER ASSY, ATHENA	N/A	15
1	1011948702	CHANNEL, CABLE, SNOUT BODY, ATHENA	AL 6061-T6	14
1	1006350676	PLATE, SHEAR	AL 6061-T6	13
1	1006263075	PLATE, SHEAR	AL 6061-T6	12
1	1009107132	EXTERNAL PAYLOAD ASSEM, ATHENA II	N/A	11
1	1009065697	PAYLOAD COLLAR, ATHENA II	AL 6061-T6	10
2	1004167568	PIN,BALL LK, DETENT,[.375D X 7.0L]	SST,316	9
2	1006399940	REAR BRACKET, LIFT	AL 7075-T6	8
1	1008907050	CONE ASSEMBLY, ATHENA II	N/A	7
1	1008906775	PLATE, FRONT, STRUCTURAL BOX, ATHENA	AL 6061-T6	6
1	1011948680	PLATE, BOTTOM, SNOUT BODY, ATHENA	AL 6061-T6	5
1	1011948763	PLATE, TOP, SNOUT BODY, ATHENA	AL 6061-T6	4
1	1011948765	PLATE, SIDE, SLED, SNOUT BODY, ATHENA	AL 6061-T6	3
1	1011948764	PLATE, SIDE, SNOUT BODY, ATHENA	AL 6061-T6	2
1	1011948533	PLATE, REAR, AIRBOX ACCESS, ATHENA	SST 304 ANN	1

PARTS LIST

UNLIMITED DISTRIBUTION

THIS WORK WAS PERFORMED UNDER THE AUSPICES OF THE U.S. DEPARTMENT OF ENERGY UNDER CONTRACT DE-AC52-07NA27344. NEITHER THE UNITED STATES GOVERNMENT NOR LAWRENCE LIVERMORE NATIONAL SECURITY, LLC, NOR ANY OF THEIR EMPLOYEES MAKES ANY WARRANTY, EXPRESSED OR IMPLIED OR ASSUMES ANY LEGAL LIABILITY OR RESPONSIBILITY FOR THE ACCURACY, COMPLETENESS OR USEFULNESS OF ANY INFORMATION, APPARATUS, PRODUCT, OR PROCESS DISCLOSED, OR REPRESENTS THAT ITS USE WOULD NOT INFRINGE PRIVATELY OWNED RIGHTS. REFERENCE HEREIN TO ANY SPECIFIC COMMERCIAL PRODUCT, PROCESS, OR SERVICE BY TRADE NAME, TRADEMARK, MANUFACTURER, OR OTHERWISE DOES NOT NECESSARILY CONSTITUTE OR IMPLY ITS ENDORSEMENT, RECOMMENDATION, OR FAVORING BY THE UNITED STATES GOVERNMENT OR LAWRENCE LIVERMORE NATIONAL SECURITY, LLC.

METRIC
THIRD ANGLE PROJECTION
DWG CLASS - A
SIZE A0
SHEET 1 OF 2
DO NOT SCALE

LAWRENCE LIVERMORE NATIONAL LABORATORY
© LAWRENCE LIVERMORE NATIONAL SECURITY - LLC
P.O. BOX 808, LIVERMORE CA 94551
CAGE CODE 14067

TITLE
SNOUT ASSY, ATHENA III, DIM 90-124

DWG. NO. 1011948525-AB
REV.

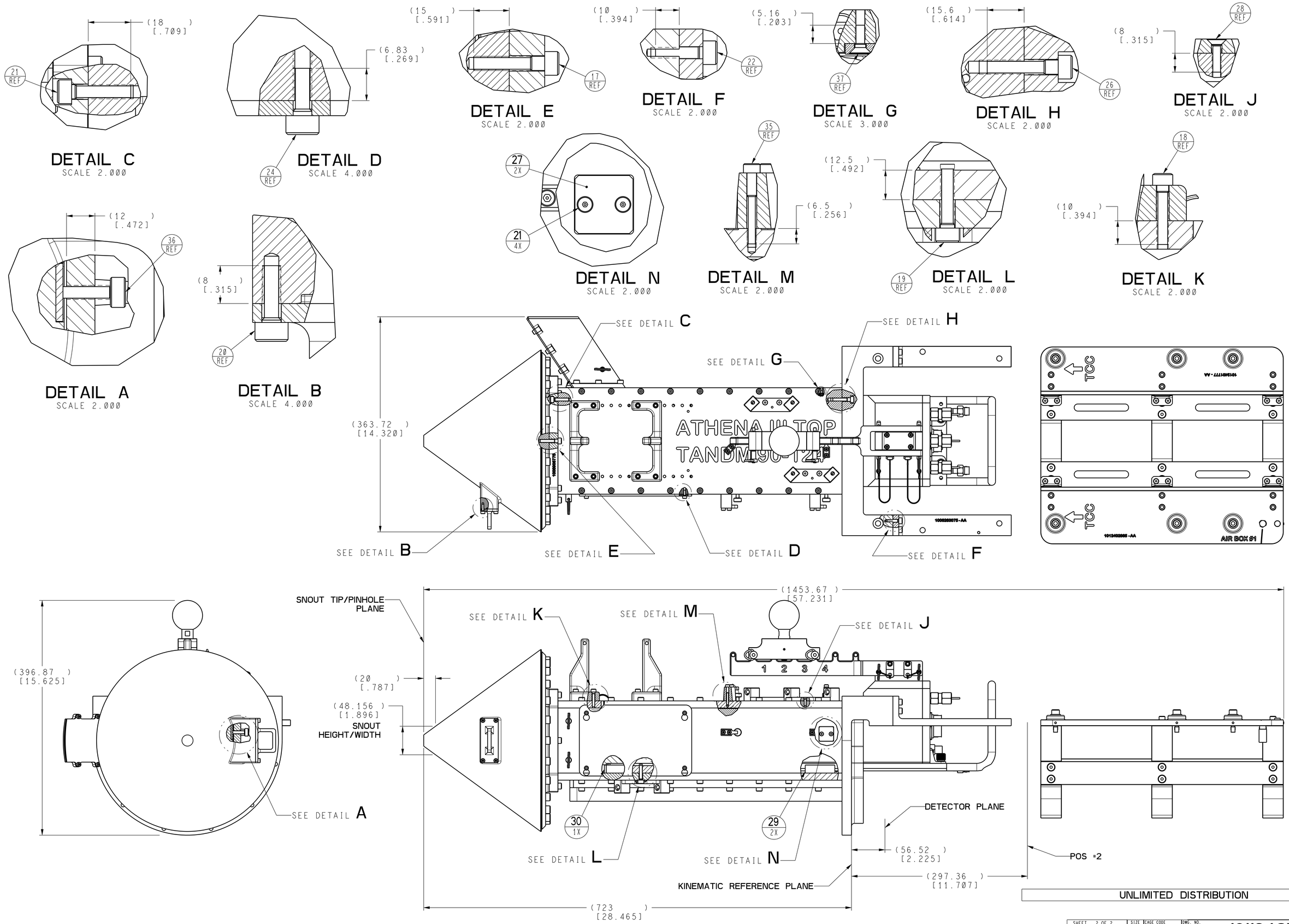

UNLIMITED DISTRIBUTION

SHEET 2 OF 2	SIZE	CAGE CODE	DWG. NO.	REV
DO NOT SCALE	A0	14067	1011948525-AB	