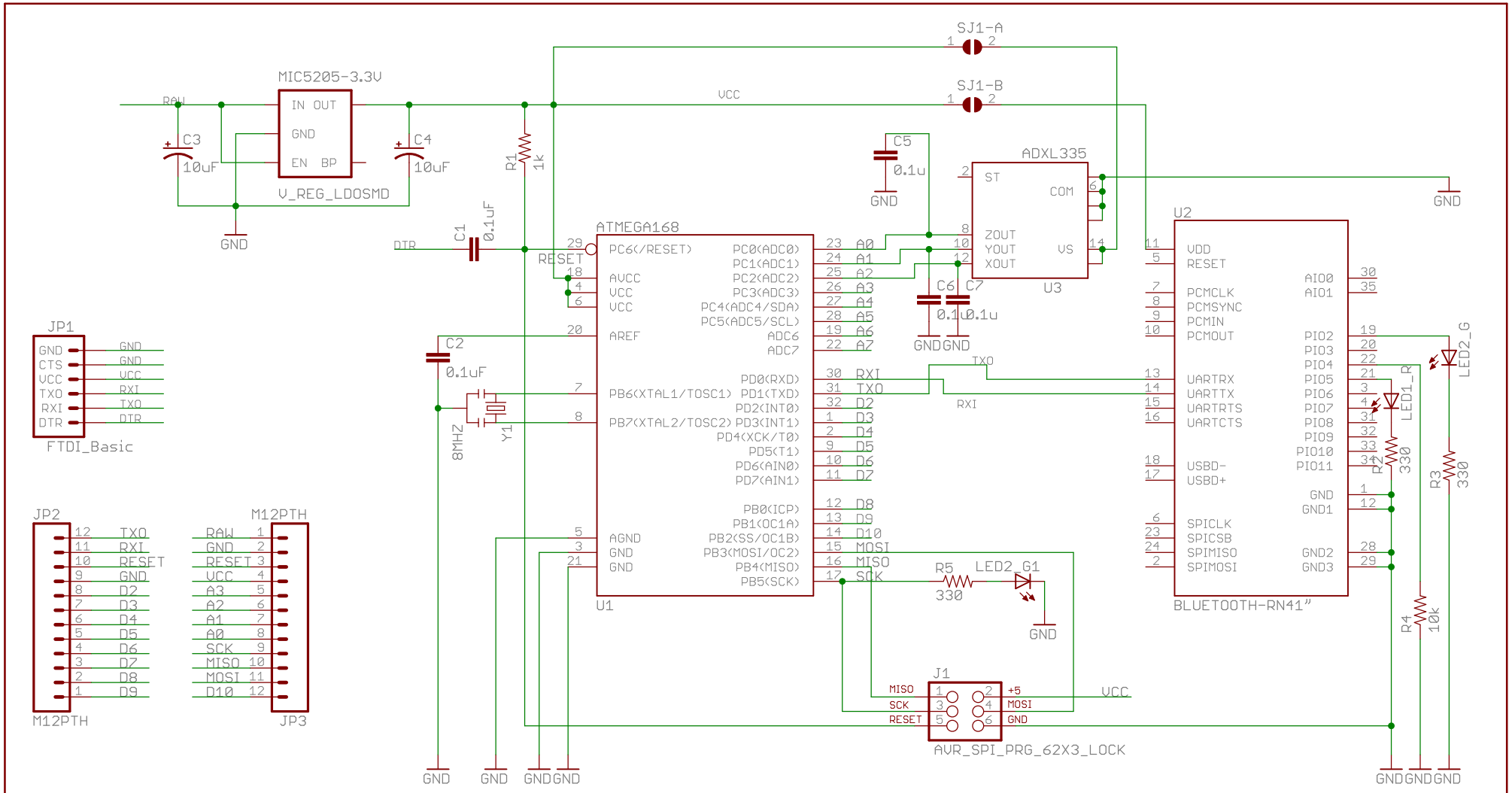

Blueboard Pro v1.0 = AVR ATmega168/328 + ADXL335 (3D Accelerometer) + RN41/42 (Bluetooth). Enable last two chips with jumpers SJ1-A and SJ1-B. Pin compatible with Arduino Pro Mini v13 (by Sparkfun & Team Arduino) + ICSP/SPI. Eagle parts & PCB: SMT 0603 (R,C) & 0805 (LED) footprints.

Licensed for use under Creative Commons Attribution-NonCommercial-ShareAlike 3.0 Unported (CC BY-NC-SA 3.0).

Designed by Dalibor Hrg
www.daliborhrg.com
02 Sep 2013

TITLE: Blueboard_Pro_v1.0

Document Number: REV:

Date: 11/4/2013 4:00:54 AM Sheet: 1/1