e-ISSN: 2582-5208
International Research Journal of Modernization in Engineering Technology and Science
(Peer-Reviewed, Open Access, Fully Refereed International Journal)
Volume:03/Issue:08/August-2021 Impact Factor- 5.354 www.irjmets.com

DESIGN, ANALYSIS AND FABRICATION OF REMOTE- CONTROLLED LIFE SAVING BUOY

Saurabh Kathole[*1], Tushar Galphade[*2], Shubham Sonavane[*3], Shardul Patne[*4]

[*1,2,3,4]Department of Mechanical Engineering, University of Mumbai, Maharashtra, India.

ABSTRACT

This paper presents a review of the developments in the battery powered remote- controlled boat for various applications. A Life- saving Buoy has had a revolutionary upgrade to the invention created 300 years ago, fitted with a remote control, thrusters and battery can be sent off to the struggling person in the water. It is a nifty lifesaving idea which gives this lifebuoy a U-shape to give a good grip to hold and stay within the U-shaped area of the buoy for a person who is drowning or who is injured and cannot swim. U-shape lifesaving buoy can drive itself around in the water by remote control, meaning it can reach a victim quickly, and transport them to safety if need be. The U-shaped remote-controlled buoy is capable of working in the adverse conditions and with its own navigation and guidance systems. The U-shaped remote-controlled buoy is a fast, efficient way of saving lives. Once victim has been reached, the U-shaped buoy has enough power to help drag them back towards safety, which could make it very handy on large ships that might have to launch rescue boat(s) otherwise. It also enables those onboard to launch the device without the need to turn the boat around, meaning no time is lost at the start of the rescue operation. Waves are no match for the U-shaped buoy which can be seen speeding over them to get to its target. The water is a dangerous place and as much as a U-shaped remote-controlled buoy is a life saver it is not difficult to get to the person particularly if they are injured, distress and panic.

Keywords: Life-Buoy, U-Buoy, RC-Buoy, Electronic Buoy, U-shaped Lifesaver, Poseidon's Buoy, Watercraft.

I. INTRODUCTION

A lifebuoy, ring buoy, life-ring, lifesaver, life donut, preserver or lifebelt, also referred to as a "kisby ring" or "perry buoy", may be a life-saving buoy designed to be thrown to an individual within the water, to supply buoyancy and stop drowning. Some modern lifebuoys are fitted with one or more seawater-activated lights, to assist rescue in the dark. The lifebuoy is typically ring- or horseshoe-shaped and features a connecting line allowing the casualty to be pulled to the rescuer during a boat. They're carried by ships and also are located beside bodies of water that have the depth or potential to drown someone. They're often subjected to vandalism which, since the unavailability of lifebuoys could lead on to death. U-shaped buoy can rescue both adults and youngsters and may be utilized in any wave conditions. The person operating U-shape buoy has to have a sight on the Man Over Board (MOB) but the speed of the device means they should still be close enough to visualize, assuming the incident is noted straight away.

Advantages:

- They can reach places that can be hard for the lifeguard to reach bare-bodied. This makes it possible for the distressed, but the conscious victim to be rescued without even the guard reaching for them in person.
- They offer a simple time to form a rescue even when the lifeguard is at great distance faraway from the victim. This is due to the throw line which comes with the buoy. Most of the rings come with or the lines can also be bought separately to accessorize a buoy making it more effective in rescue missions. This can be vital since 12the safety of the victim is assured before the guard can get to them.
- They come in different sizes, making it possible for the lifeguards to choose the best for rescuing both children and adults.

With the road well attached, they create the duties of a lifeguard easier since they only got to be thrown to the victim and pulled to safety once the victim holds on thereto securely. They are designed to save time in tricky, but dangerous situations.

e-ISSN: 2582-5208
International Research Journal of Modernization in Engineering Technology and Science
(Peer-Reviewed, Open Access, Fully Refereed International Journal)
Volume:03/Issue:08/August-2021 Impact Factor- 5.354 www.irjmets.com

Types of Buoy:

1. Ring Buoy:

Lifebuoy & buoyant 30mtr floating line; This tough lifebuoy set features a 2.5kg or 30" diameter Life- buoy with a 30M floating line SOLAS/MCA approved

2.U-Shaped Buoy:

Outer diameter - 520 mm, Thickness – 100 mm, Inner diameter–250mm

3.Remote-Controlled U-Shaped Buoy:

This device is designed to save people from drowning in water without exposing the rescuers life to risk. Probability of saving person from drowning is increases as the time taken by recuse team to reach person decreases. The adoption of autonomous device and robots has witnessed a steady growth in several fields thus this project is aimed at rescue operations. While carrying out rescue operations there are certain limitation up to which life-saving buoy can be thrown. In order to eliminate that limitations this remote-controlled buoy is fabricated. Because of remote control operation it has eliminated certain problems such as operational range and speed with which rescue operation is carried out. This device uses component such as frame made up of plastics electric battery to provide electric charge to pump jet or motor for propulsion purpose, RC circuit with 2or 4 channel remote control.

II. METHODOLOGY

Our team has created a tool that would save lives while preserving the security of rescuers. Drowning victims, especially adults, are often dangerous: in their panic, drowning victims instinctively clutch to anything to tug themselves up, essentially pinning down the rescuer. We've named this device as “U-Buoy”. The U-Buoy hopes to avoid this double tragedy by keeping rescuers out of the water. To save lots of lives during a sea or an ocean without putting in danger the lifetime of the savior was an enormous challenge which has been successfully overcome with the thought of this revolutionary lifesaving buoy. It’s a singular and exclusive search and equipment, first of its kind product which is meant and developed by our team with an ambition to save lots of lives across India and possibly everywhere the world. U-Buoy are often wont to either bring casualties back to safety or act as floating device until further help arrives. U-Buoy combines a strong design with light-weight materials to beat even the foremost difficult of weather. U-Buoy is capable of top speeds that reach 10m/s and is operable for up to 25minutes. U-Buoy may be a self-propelled, remote controlled life-saving device that

quickly reaches casualties without exposing first responders to danger and may add any position and under any extreme wave conditions in water.

1.The U-Buoy contains 2 batteries, 2 thrusters, 2 motors, 1 Tx Rx circuit with 4-channel remote controller and Electronic Speed Controller (ESC).

2.Once tossed into the water, lifesavers are able to navigate the U-Buoy using a joystick remote controller connected with Tx Rx circuit of 4 channels with an operating range of 50 meters of diameter and bandwidth of 2.47GHz.

3.This Tx Rx circuit requires power of 12 volts at 1.5amp which is supplied by the LiPo batteries of 12 volts at 2200mAh which can work up to 25mins.

4.A LiPo battery is used provide electric power to motors also with the use of electronic speed controller (ESC).

5.The ESC is a component that is used to provide a link between power source and the motor within the power train of a remote-control boat.

6.When the circuit is ON then power supplied by battery is transmitted through ESC to the BLDC motors which rotates at maximum speed of 70,000 RPM.

a) Principle Concept

The principle concept used is Archimedes principle. This principle states that, if the body is partially or fully submerged in a fluid it experiences and upward force which is called as buoyant force. The magnitude of this buoyant force must be equal to weight of fluid whose volume is equal to the volume of the solid body completely or partially submerged in the fluid. Due to this the body doesn't sinks nor does it rise completely above the fluid level.

b) Proposed Design

Design of RC life-saving buoy is done as per the SOLAS requirements. The International Convention for the Safety of Life at Sea (SOLAS) is an international maritime treaty which sets minimum safety standards in the construction, equipment and operation of merchant ships. The convention requires signatory flag states to ensure that ships flagged by them comply with at least these standards.

c) Calculations

To find mass of submerged object we have equation given by Archimedes principle, Mass of object – Apparent mass of object = density of sea water * volume of object.

$\therefore$ M – $M_{Apparent}$ = ρ * V Where,

Mass of object M = mass of human (kg) + mass of buoy = 75+20 = 95 kg

Apparent mass $MApparent$ = mass of human in water (kg) =?

Density of sea water ρ = 1025 kg/m3

Volume of object =?

Thus, to find volume of human; Specific gravity of human = 0.985.

∴ S = $(density\ of\ human/\ density\ of\ water)$

$$0.985 = \frac{\rho * human}{1000}$$

$$\rho\ human = 985\ \frac{kg}{m^3}$$

Mass of human (kg) = m = 75 kg

$$\rho\ human = \frac{m}{V}$$

$$\therefore 985 = \frac{75}{V}$$

∴ V = 0.0761 m^3

∴ M - $M_{Apparent}$ = ρ * V

∴ 95 - $M_{Apparent}$ = 1025 * 0.0761

∴ $M_{Apparent}$ = 16.995 kg = 17 kg

∴ Apparent Weight = 17 *9.81 = 166.71 N (↓)

For floating object: $W_{obj} = F_b$ = Buoyant force

∴ $F_b = \rho_{fluid} * V_{fluid}$ * gravity

$= \rho_{water} * V_{obj} * 9.81$

= 1025 * 0.0761 * 9.81

= 765.20 N

∴ $W_{obj} = F_b$ = 765.20 N

III. MODELING AND ANALYSIS

1. Material Used

The U-shaped buoy has a light weighted material of Poly Lactic Acid (PLA) with 2 battery powered (200 grams each) device which can be used in place of any "lifesaving donut." Material used are High density and Low-density PE plastic, polystyrene, polyurethane, polythene. Out of which high density and low-density PE plastics are widely used for life saving buoys. We are selecting high density PE plastic. Most are made with resilient soft materials making them most suitable for the settings. They have a closed cell of solid foam making them durable. With a high quality one, a lifeguard can enjoy all the benefits for a long period of time. The materials they are made from are made to withstand the extreme temperatures and weather conditions of the setting. Hence, they do not accumulate mildew and neither do they rot. They are perfect for watery outdoor settings.

Components Used

1. BLDC Motor:

The motor is used to convert electrical power from batteries to mechanical power in the form of rotary motions for propulsion purposes. The motor is characterized by a few specific parameters such as no-load and stall speed, torque, current, and voltages, as well as the power factor. These parameters are important in order to predict the performance of a DC motor. Further, internal friction due to presence of brushes is also reduced thereby allowing for higher speed, lower electrical noise and a reduced EMI. However, brushless motors

e-ISSN: 2582-5208
International Research Journal of Modernization in Engineering Technology and Science
(Peer-Reviewed, Open Access, Fully Refereed International Journal)
Volume:03/Issue:08/August-2021 Impact Factor- 5.354 www.irjmets.com

require a much more complex. electronic speed controller, and these controllers are expensive and are as heavy as motors themselves.

Specification –

1. Shaft diameter- 3.16 mm
2. Motor velocity constant 2450KV
3. Current capacity – 12 A
4. RPM – 35000 RPM to 70000 RPM
5. Number of motors – 2

2. Battery:

A battery is a device operated by converting chemical energy into electrical energy through an electrochemical discharge reaction. A battery is formed by one or more electrochemical cells, and the electrochemical cell is in turn composed of a cathode, anode and electrolyte. Lithium polymer are one of the most advanced secondary batteries. Generally, Li-Po batteries are packaged in plastic film as Li-Po has no free electrolytes. Therefore Li-po batteries have the advantage of occupying less space and are much lighter. The energy density of Li- Po batteries is almost double compared to Ni-Cd and Ni-MH batteries. Thus, the run time of a Li-Po battery is double for the same battery weight.

Specification –

1. Model no.- Orange 2200/3S-30SVoltage- 11.1 V
2. Dimensions – 24*34*106 mm
3. Max continuous discharge- 30S (66.0 A)
4. Number of Batteries- 2

3. Electronic Speed Controller (ESE):

The electronic speed controller (ESC) is a component that is used to provide a link between the power source and the motor within the powertrain of a remote-control boat. The power output and rotational speed of the motor is controlled by the ESC in response to the operator's command by varying the width of the Pulse Width Modulation (PWM) pulses.

4. Thrusters:

Thrusters are used to propel the buoy in water. Propellers are connected on to the shaft of BLDC motor. As propellers rotate it's displaces the water in backward direction and buoys moves in forward direction.

5. TxRx:

A transmitter is used to transform human command into signals to a receiver in order to control the RC boat. Primitive operation of the transmitter essentially involves switching on and off the oscillating circuit. This results in a simple continuous wave or on/off keyed transmission. The MHz and 2.4GHz transmitter can be classified by the antenna. Typically, a MHz transmitter has a collapsible aluminum antenna while the 2.4 GHz has a shorter plastic antenna. The most common radio frequencies used in remote control boat are 27 MHz, 40 MHz and 2.4 GHz. The 2.4 GHz set with the "digital spectrum modulation" technology overcame the frequency interference problem.

e-ISSN: 2582-5208
International Research Journal of Modernization in Engineering Technology and Science
(Peer-Reviewed, Open Access, Fully Refereed International Journal)
Volume:03/Issue:08/August-2021 Impact Factor- 5.354 www.irjmets.com

Modelling & Analysis

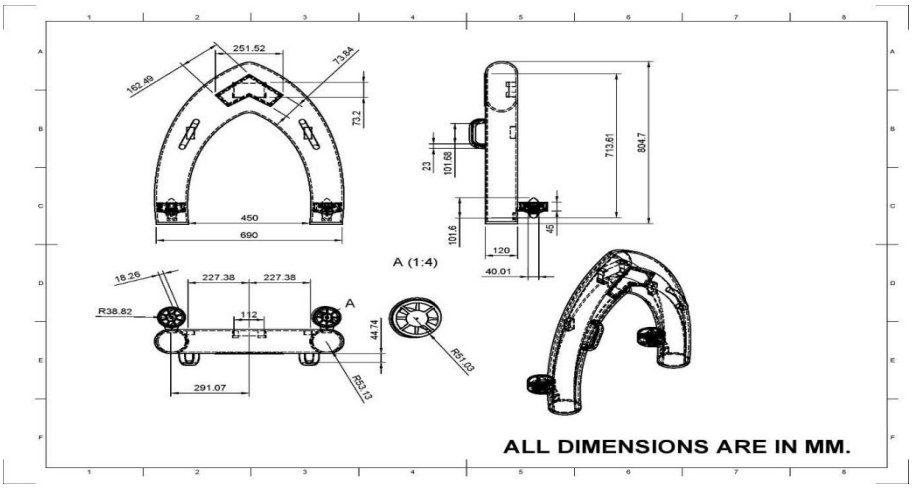

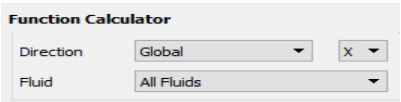

CAD MODEL

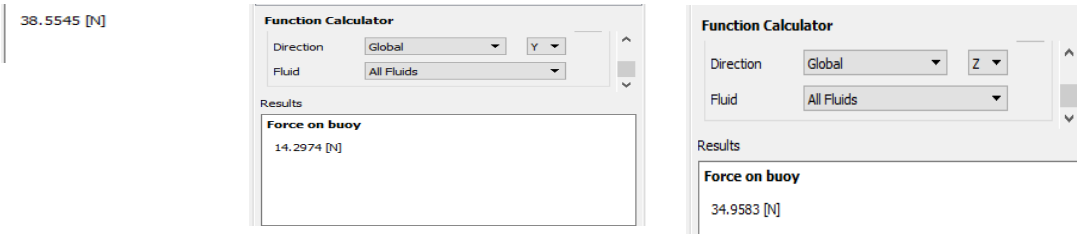

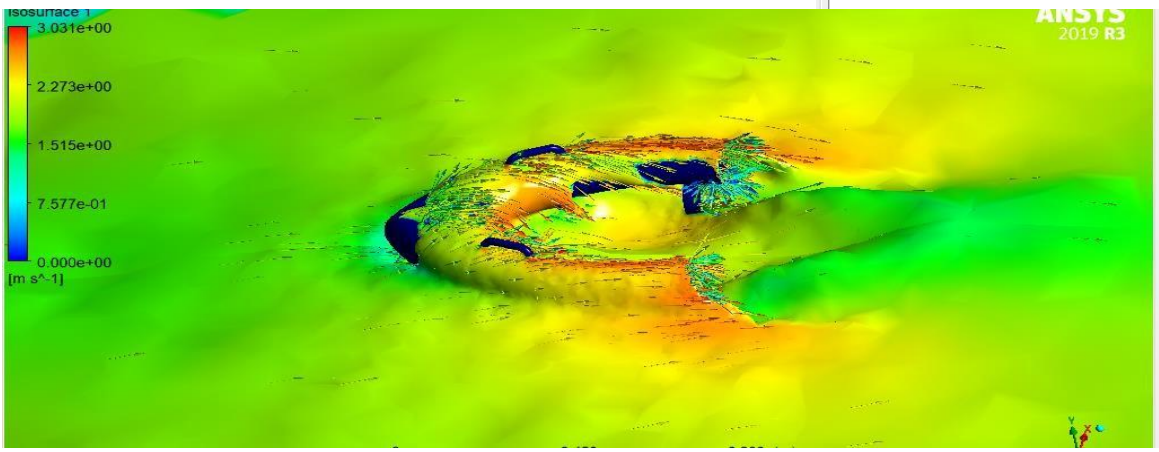

CFD ANALYSIS REPORT ON ANYSYS-19

IV. RESULTS AND DISCUSSION

The new RC life-saving buoy is successfully fabricated. The life-saving buoy is developed with very low operating cost and manufacturing cost. The batteries used only 1 to 2 units electricity. Also, the weight of buoy is comparatively very less around 8 kg. The buoy is capable of operating within operational range of 1 km radius with battery last up to 15 min in actual conditions. The buoy is capable of carrying out rescue operation of adult person without putting any rescue volunteer's life in danger. The buoy also reduced the rescue operation time significantly. As it is electrically operated it has no carbon foot prints.

V. CONCLUSION

This project was implemented with an idea of effective solution to rescue operation of drowning problem. This requirement was to be achieved by providing remote controlled buoy that can be go up to range of at least 50 m. Mechanical design has been done first and then analysis of model followed by fabrication of buoy by 3D printing has been completed. Assembly of all the mechanical parts of body with simultaneously fitting of electronic component inside has been accomplished. In this course the design, analysis of model, selection of fabrication method in which water proof body can be fabricated, selection of material for manufacturing and section of electronic component was done. Attempt to provide remote controlled life-saving buoy is made. The weight of buoy is less than 8kg which is significantly lesser than the buoys available weighs around 17 to 22 kg.

VI. REFERENCES

[1] International Research Journal of Engineering and Technology (IRJET) e-ISSN: 2395 -0056. An Autonomous Maneuver Sailing Ro-boat for Oceanographic Research. Pratibha Wakode, S.B. Rothe.

[2] Current Journal of Applied Science and Technology 33(5): 1-29, 2019; Article no. CJAST.47791 ISSN: 2457-1024. Battery Powered RC Boats: A Review of Its Developments for Various Applications. C. Z. Eugene, J. J. Lim, Umar Nirmal and Saijod T. W. Lau.

[3] The Sail-Buoy remotely-controlled unmanned vessel: Measurements of near surface temperature, salinity and oxygen concentration in the Northern Gulf of Mexico. Mahmud Hasan Ghani, Lars R. Hole, Ilker Fer, Vassiliki H. Kourafaloud, Nicolas Wienders, HeeSook Kang, Kyla Drushka, David Peddie.

[4] Proceedings of the International Conference on Mechanical Engineering and Renewable Energy 2015 (ICMERE2015) 26 – 29 November, 2015, Chittagong, Bangladesh, ICMERE2015-PI-000. DESIGN AND IMPLEMENTATION OF A REMOTELY CONTROLLED MOBILE RESCUE ROBOT. Mohammed Saifuddin Munna, Md. Kamrojjaman and Mohammad Ariful Islam Bhuyan, Mosharaf Ahmed Chowdhury.

[5] https://en.wikipedia.org/wiki/Lifebuoy

[6] https://en.m.wikipedia.org/wiki/Remotely_operate d_underwater_vehicle