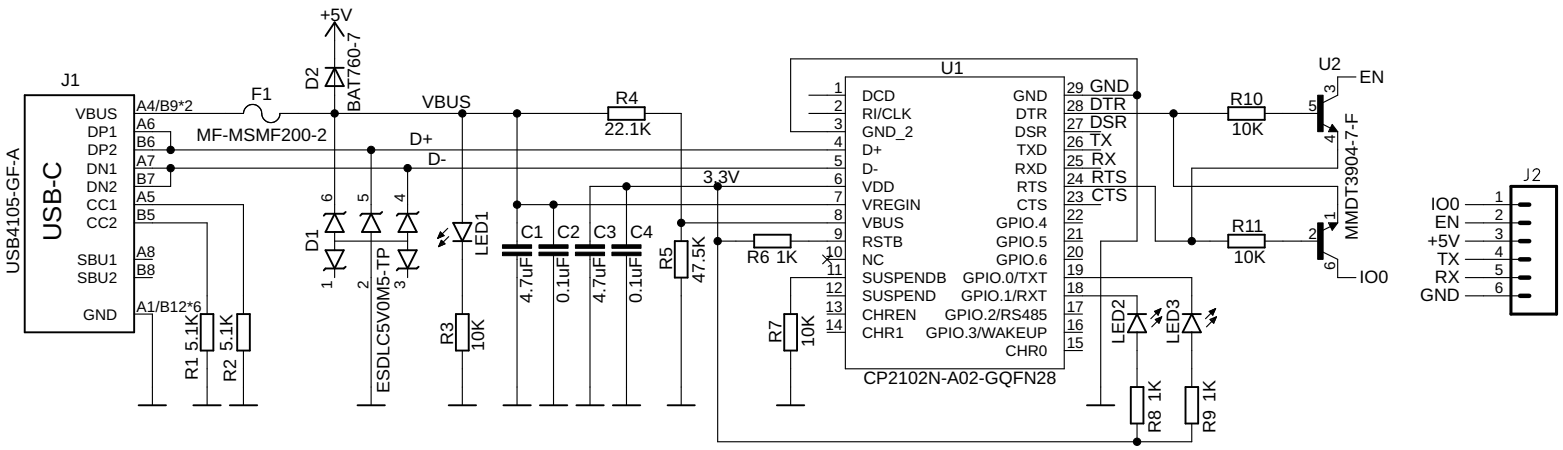

TITLE: ESP-Prgm	
Document Number:	REV:
Date: 8/16/20 11:01 AM	Sheet: 1/1