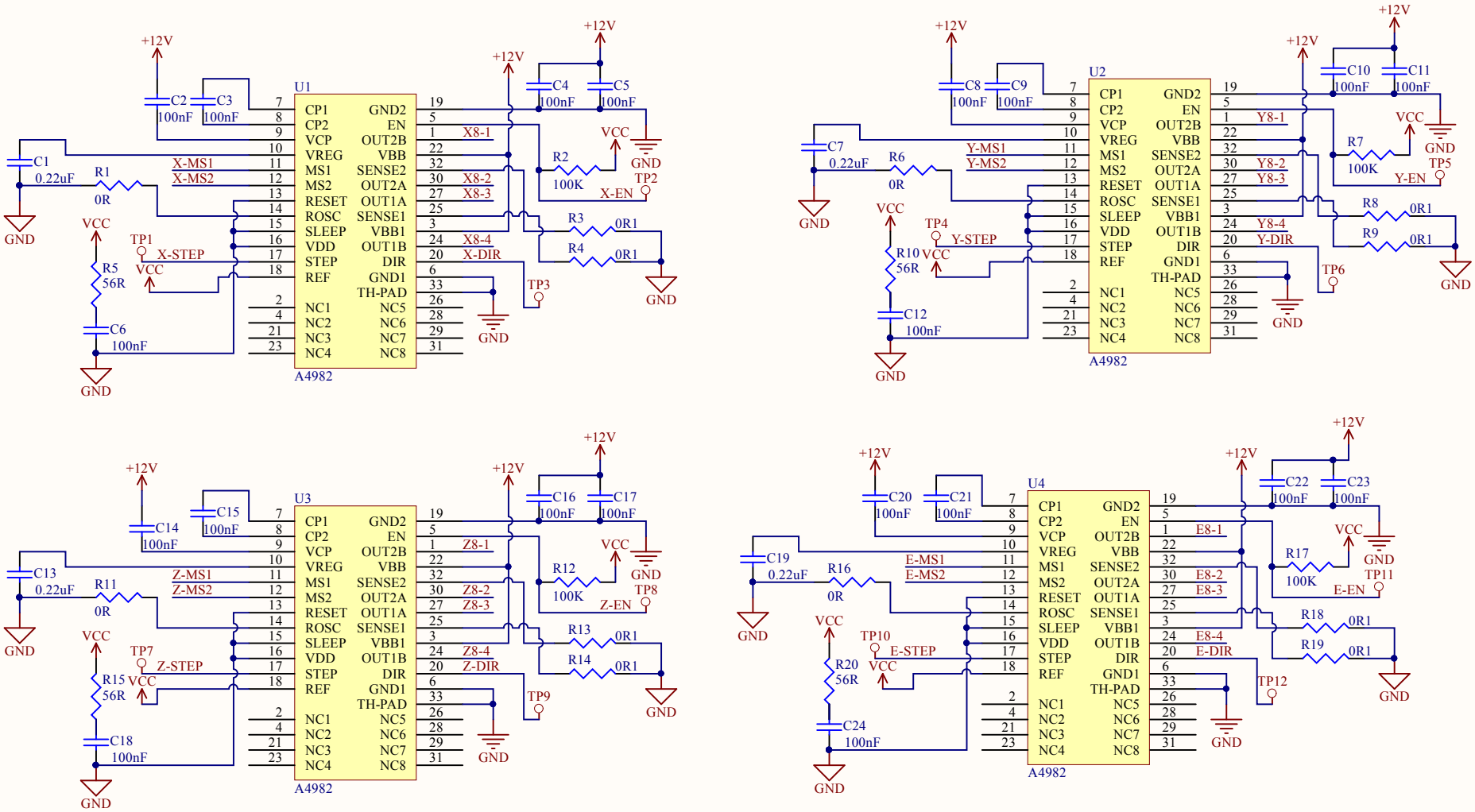


| | | | |
|---|---|---|---|
| Title DRIVER | | | Shokara Inc. Yokohama, Japan |
| Size: A4 | Number: | Revision: | |
| Date: 2018/03/14 | Time: 14:50:30 | Sheet of | Author: Shohei Aoki |
| File: C:\Users\shohei\Dropbox\Altium\drivershield\3Dprinter_shield\Driver.SchDoc | | | |

Shokara

3D printer shield