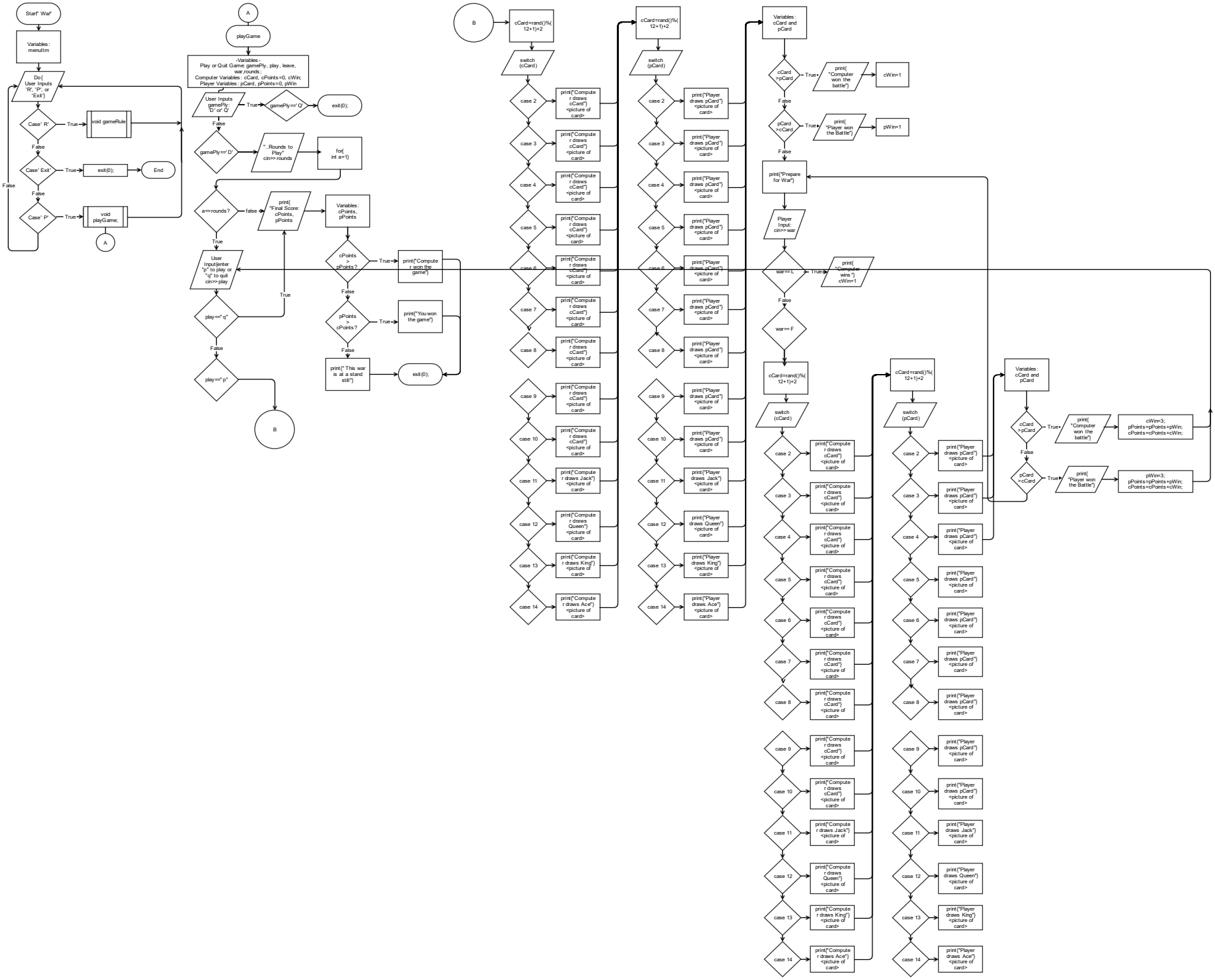
Start" War"
Variables : menuItm
Do{ User Inputs 'R', 'P', or 'Exit'}
Case" R"
True
void gameRule
False
Case" Exit"
True
exit(0);
End
False
Case" P"
True
void playGame;
A
A
playGame
-Variables- Play or Quit Game: gamePly , play , leave, war_rounds ; Computer Variables : cCard, cPoints=0, cWin; Player Variables : pCard, pPoints=0, pWin
User Inputs gamePly: "D" or" Q"
True
gamePly=="Q"
exit(0);
False
gamePly=="D"
"..Rounds to Play" cin>> rounds
for(int a=1)
a<=rounds?
false
print("Final Score: cPoints, pPoints
Variables : cPoints , pPoints
True
User Input(enter "p" to play or "q" to quit cin>>play
play=="q"
True
False
play=="p"
B
cPoints > pPoints?
True
print("Compute r won the game")
False
pPoints > cPoints?
True
print("You won the game")
False
print(" This war is at a stand still")
exit(0);
B
cCard=rand()%(12+1)+2
switch (cCard)
case 2
print("Compute r draws cCard") <picture of card>
case 3
print("Compute r draws cCard") <picture of card>
case 4
print("Compute r draws cCard") <picture of card>
case 5
print("Compute r draws cCard") <picture of card>
case 6
print("Compute r draws cCard) <picture of card>
case 7
print("Compute r draws cCard") <picture of card>
case 8
print("Compute r draws cCard") <picture of card>
case 9
print("Compute r draws cCard") <picture of card>
case 10
print("Compute r draws cCard") <picture of card>
case 11
print("Compute r draws Jack") <picture of card>
case 12
print("Compute r draws Queen") <picture of card>
case 13
print("Compute r draws King") <picture of card>
case 14
print("Compute r draws Ace") <picture of card>
cCard=rand()%(12+1)+2
switch (pCard)
case 2
print("Player draws pCard") <picture of card>
case 3
print("Player draws pCard") <picture of card>
case 4
print("Player draws pCard") <picture of card>
case 5
print("Player draws pCard") <picture of card>
case 6
print("Player draws pCard") <picture of card>
case 7
print("Player draws pCard") <picture of card>
case 8
print("Player draws pCard") <picture of card>
case 9
print("Player draws pCard") <picture of card>
case 10
print("Player draws pCard") <picture of card>
case 11
print("Player draws Jack") <picture of card>
case 12
print("Player draws Queen") <picture of card>
case 13
print("Player draws King") <picture of card>
case 14
print("Player draws Ace") <picture of card>
Variables : cCard and pCard
cCard >pCard
True
print("Computer won the battle")
cWin=1
False
pCard >cCard
True
print("Player won the Battle")
pWin=1
False
print("Prepare for War")
Player Input: cin>> war
war==L
True
print("Computer wins ") cWin=1
False
war==F
cCard=rand()%(12+1)+2
switch (cCard)
case 2
print("Compute r draws cCard") <picture of card>
case 3
print("Compute r draws cCard") <picture of card>
case 4
print("Compute r draws cCard") <picture of card>
case 5
print("Compute r draws cCard") <picture of card>
case 6
print("Compute r draws cCard") <picture of card>
case 7
print("Compute r draws cCard") <picture of card>
case 8
print("Compute r draws cCard") <picture of card>
case 9
print("Compute r draws cCard") <picture of card>
case 10
print("Compute r draws cCard") <picture of card>
case 11
print("Compute r draws Jack") <picture of card>
case 12
print("Compute r draws Queen") <picture of card>
case 13
print("Compute r draws King") <picture of card>
case 14
print("Compute r draws Ace") <picture of card>
cCard=rand()%(12+1)+2
switch (pCard)
case 2
print("Player draws pCard") <picture of card>
case 3
print("Player draws pCard") <picture of card>
case 4
print("Player draws pCard") <picture of card>
case 5
print("Player draws pCard") <picture of card>
case 6
print("Player draws pCard") <picture of card>
case 7
print("Player draws pCard") <picture of card>
case 8
print("Player draws pCard") <picture of card>
case 9
print("Player draws pCard") <picture of card>
case 10
print("Player draws pCard") <picture of card>
case 11
print("Player draws Jack") <picture of card>
case 12
print("Player draws Queen") <picture of card>
case 13
print("Player draws King") <picture of card>
case 14
print("Player draws Ace") <picture of card>
Variables : cCard and pCard
cCard >pCard
True
print("Computer won the battle")
cWin=3; pPoints=pPoints+pWin; cPoints=cPoints+cWin;
False
pCard >cCard
True
print("Player won the Battle")
pWin=3; pPoints=pPoints+pWin; cPoints=cPoints+cWin;