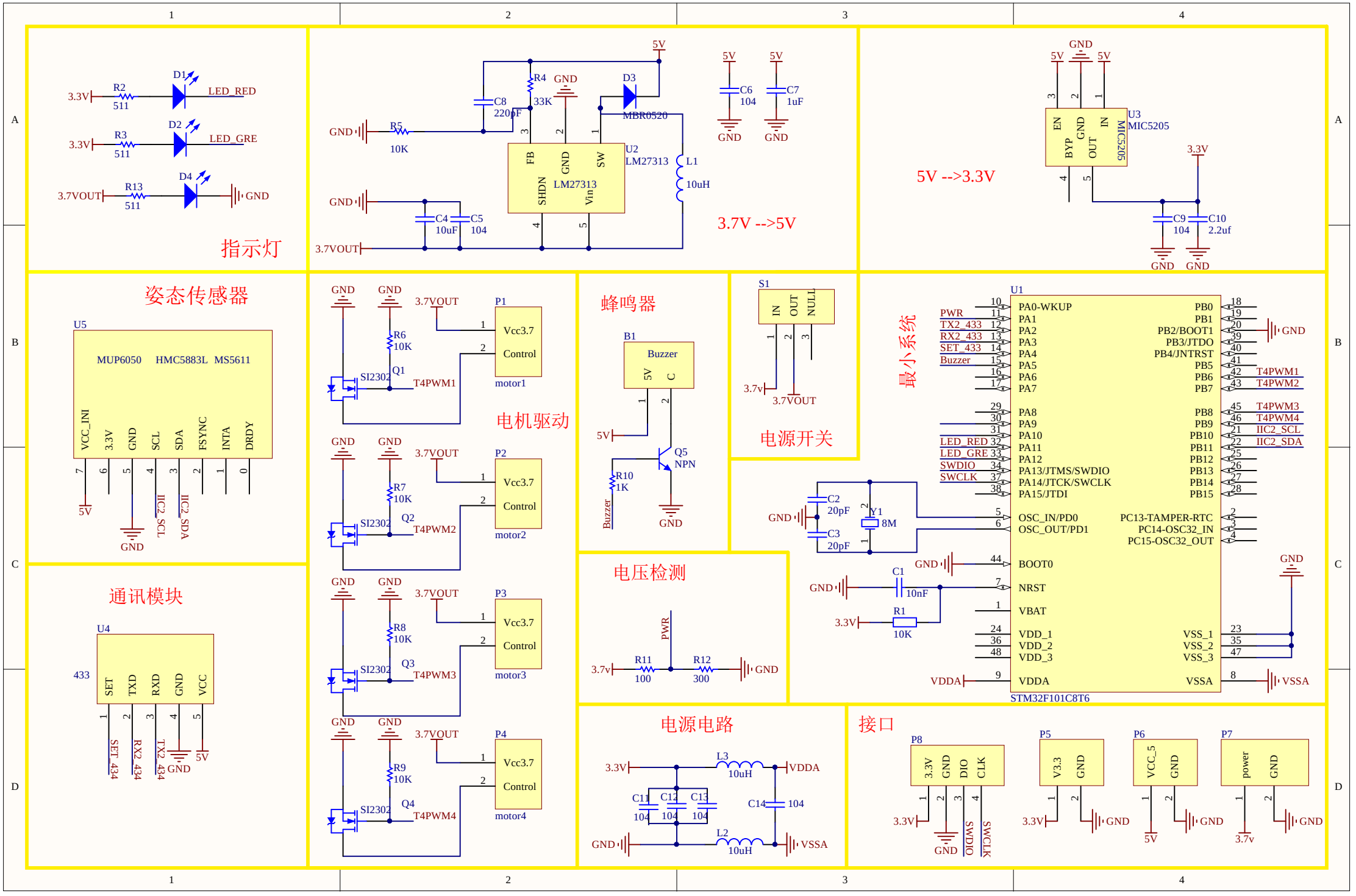
指示灯
3.3V
R2
511
D1
LED_RED
3.3V
R3
511
D2
LED_GRE
3.7VOUT
R13
511
D4
GND
3.7V -->5V
5V
R4
33K
GND
D3
MBR0520
C8
220pF
GND
R5
10K
U2
LM27313
FB
GND
SW
SHDN
Vin
L1
10uH
C4
10uF
C5
104
3.7VOUT
C6
104
C7
1uF
5V -->3.3V
U3
MIC5205
EN
GND
IN
BYP
OUT
3.3V
C9
104
C10
2.2uf
姿态传感器
U5
MUP6050
HMC5883L
MS5611
VCC_INI
3.3V
GND
SCL
SDA
FSYNC
INTA
DRDY
IIC2_SCL
IIC2_SDA
通讯模块
U4
433
SET
TXD
RXD
GND
VCC
SET_434
RX2_434
TX2_434
电机驱动
P1
P2
P3
P4
Vcc3.7
Control
motor1
motor2
motor3
motor4
3.7VOUT
R6
10K
R7
10K
R8
10K
R9
10K
SI2302
Q1
Q2
Q3
Q4
T4PWM1
T4PWM2
T4PWM3
T4PWM4
蜂鸣器
B1
Buzzer
5V
C
Q5
NPN
R10
1K
S1
IN
OUT
NULL
3.7v
3.7VOUT
电源开关
最小系统
U1
STM32F101C8T6
PA0-WKUP
PA1
PA2
PA3
PA4
PA5
PA6
PA7
PA8
PA9
PA10
PA11
PA12
PA13/JTMS/SWDIO
PA14/JTCK/SWCLK
PA15/JTDI
PB0
PB1
PB2/BOOT1
PB3/JTDO
PB4/JNTRST
PB5
PB6
PB7
PB8
PB9
PB10
PB11
PB12
PB13
PB14
PB15
OSC_IN/PD0
OSC_OUT/PD1
PC13-TAMPER-RTC
PC14-OSC32_IN
PC15-OSC32_OUT
BOOT0
NRST
VBAT
VDD_1
VDD_2
VDD_3
VDDA
VSS_1
VSS_2
VSS_3
VSSA
PWR
TX2_433
RX2_433
SET_433
Buzzer
LED_RED
LED_GRE
SWDIO
SWCLK
T4PWM1
T4PWM2
T4PWM3
T4PWM4
IIC2_SCL
IIC2_SDA
C2
20pF
C3
20pF
Y1
8M
C1
10nF
R1
10K
电压检测
PWR
3.7v
R11
100
R12
300
电源电路
3.3V
L3
10uH
VDDA
C11
104
C12
104
C13
104
C14
104
L2
10uH
VSSA
接口
P8
3.3V
GND
DIO
CLK
SWDIO
SWCLK
P5
V3.3
P6
VCC_5
P7
power