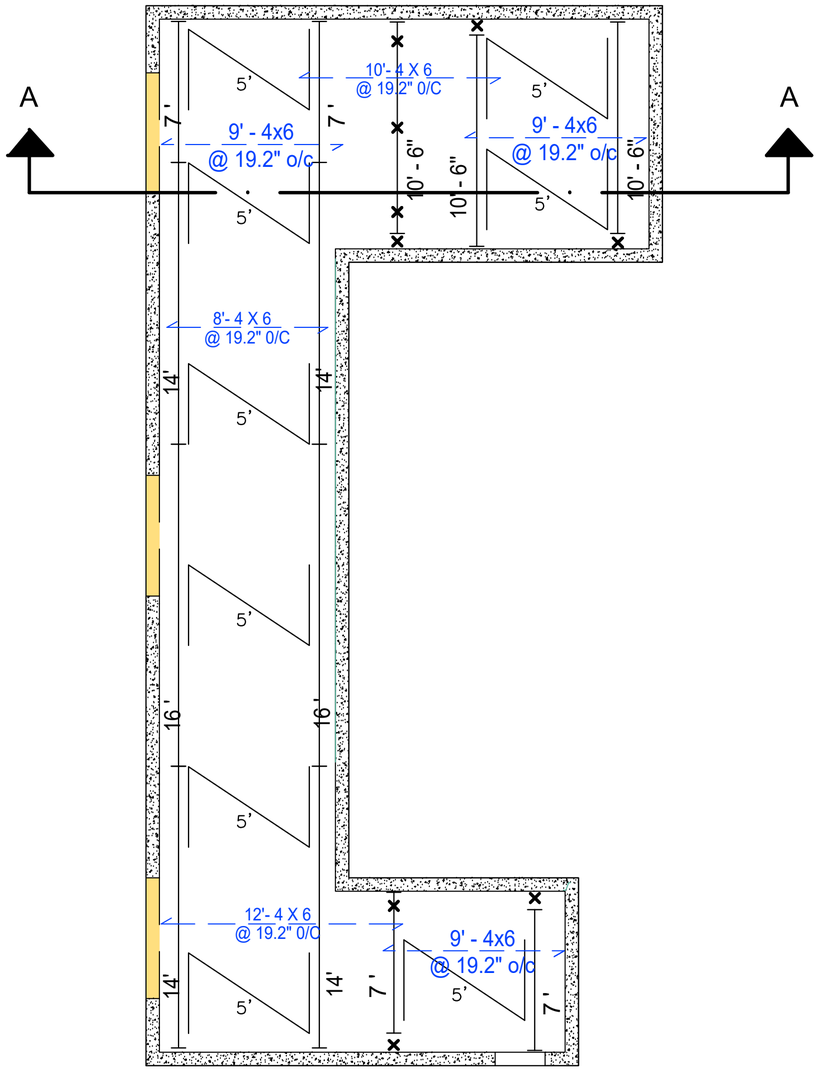

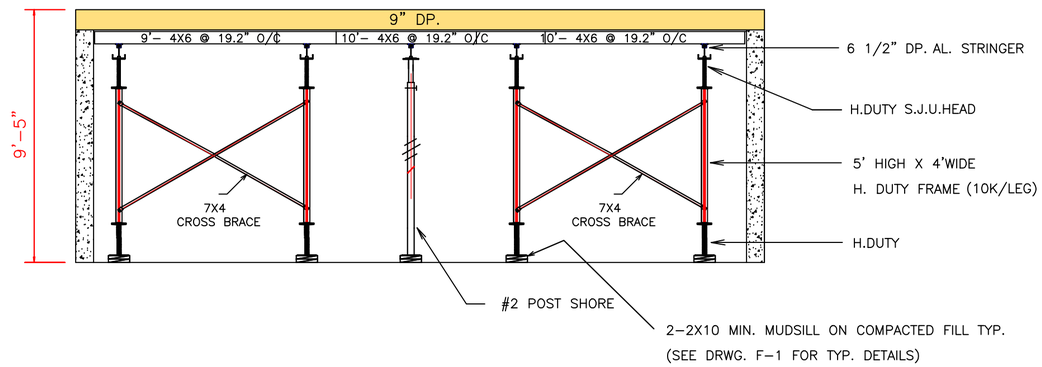

SECTION A - A :

SCALE 3/8" = 1'-0"

ROOF SUSPENDED SLAB SHORING PLAN:

SCALE 3/16"=1'–0"

9" DEEP FLAT SLAB TYPICAL U.N.O. (163 P.S.F.)

ALL FRAMES TO BE 5' HIGH X 4' WIDE HEAVY DUTY(10K/LEG) WITH 7'–0" BRACING TYP.

NO SHORE IS REQUIRED UNDER SLAB TYP. UNLESS SHOWN OR MARKED AS " ". FOR #2 POST SHORE.

PLYWOOD TO BE MIN. 5/8" D. FIR #1 OR BETTER.

FOR GENERAL NOTES AND TYPICAL DETAILS SEE DRAWING F–1.

INSPECTION IS REQUIRED BY UNDERSIGNED P. ENG. PRIOR TO POURING CONCRETE.

(48 HOURS NOTICE PLEASE).

REVISIONS	BY

TTF SCAFFOLDING Co. Ltd.
10979 OLSEN ROAD, SURREY, BC, V3V 3S9
TEL. 778 898 5301
Email: info@ttfscaffolding.com
www.ttfscaffolding.com

BUILDING SCIENCE & CONSULTING
EGBC PERMIT TO PRACTICE # 1000828
949 Sherwood Ave.
Coquitlam, BC V3K 1A9
Tel: (604) 553 4984 Cell: (604) 961-0184
Email: info@i3bsc.com

JOB:
7505 PANDORA DRIVE,
BURNABY , B.C.

CONTR:
LDJ
CONTRACTING LTD.

TITLE:
ROOF SUSPENDED SLAB SHORING PLAN, SECTION & DETAILS

Date: APR.25.2025
Scales: AS SHOWN
Drawn by: F.T.
Job:
Sheet: F-2