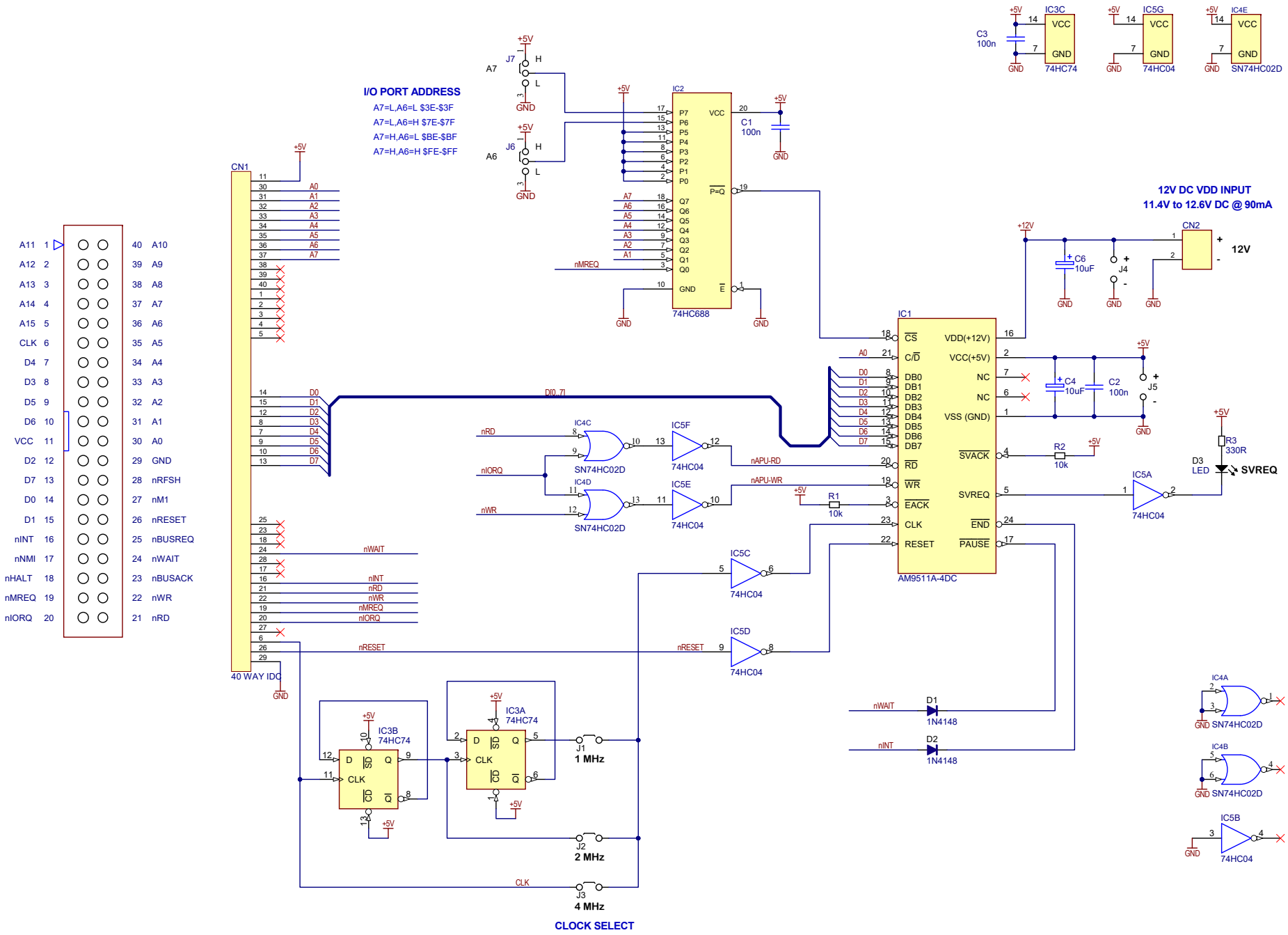
I/O PORT ADDRESS
A7=L,A6=L $3E-$3F
A7=L,A6=H $7E-$7F
A7=H,A6=L $BE-$BF
A7=H,A6=H $FE-$FF
12V DC VDD INPUT
11.4V to 12.6V DC @ 90mA
12V
CLOCK SELECT
1 MHz
2 MHz
4 MHz
SVREQ
IC1
AM9511A-4DC
IC2
74HC688
CN1
40 WAY IDC
CN2
IC3A
74HC74
IC3B
74HC74
IC3C
74HC74
IC4A
IC4B
IC4C
IC4D
IC4E
SN74HC02D
IC5A
IC5B
IC5C
IC5D
IC5E
IC5F
74HC04
IC5G
74HC04
D1
1N4148
D2
1N4148
D3
LED
R1
10k
R2
10k
R3
330R
C1
100n
C2
100n
C3
100n
C4
10uF
C6
10uF
J1
J2
J3
J4
J5
J6
J7
Title
Southern Cross SBC
AM9511A APU
Size: A3
Number:
Revision: 2
Date: 21/07/2022 Time: 5:19:42 PM
Sheet 1 of 1
File: SC_APU_02.SchDoc