Trabajo: Realización de procedimiento de montaje

Asignatura: Space Integration & Tests

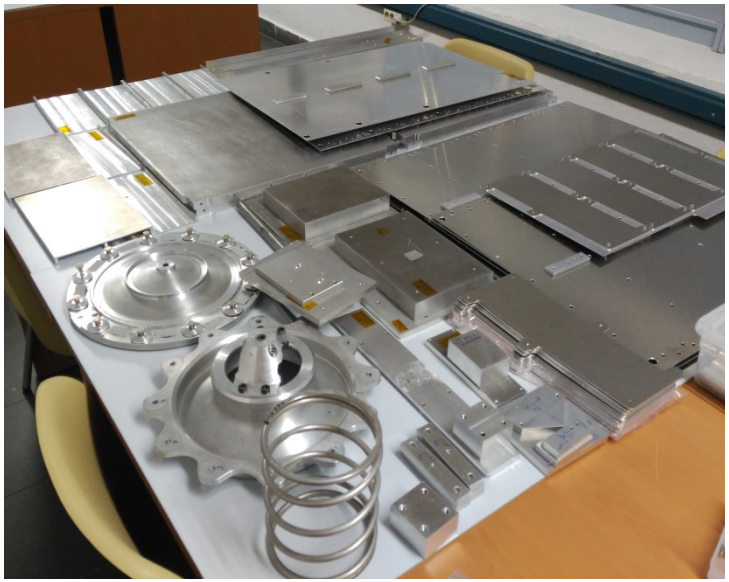

1. Descripción del trabajo:

Objetivo del trabajo:

Realización de un procedimiento completo de montaje (*Mechanical Assembly Procedure*) de la estructura del modelo de ensayo del micro satélite UPMSat-2 .

Este trabajo se realizará en **un solo grupo** por todos los alumnos que han realizado la práctica de integración, donde cada grupo de prácticas aportará la experiencia de lo aprendido durante el montaje de las partes que realizaron

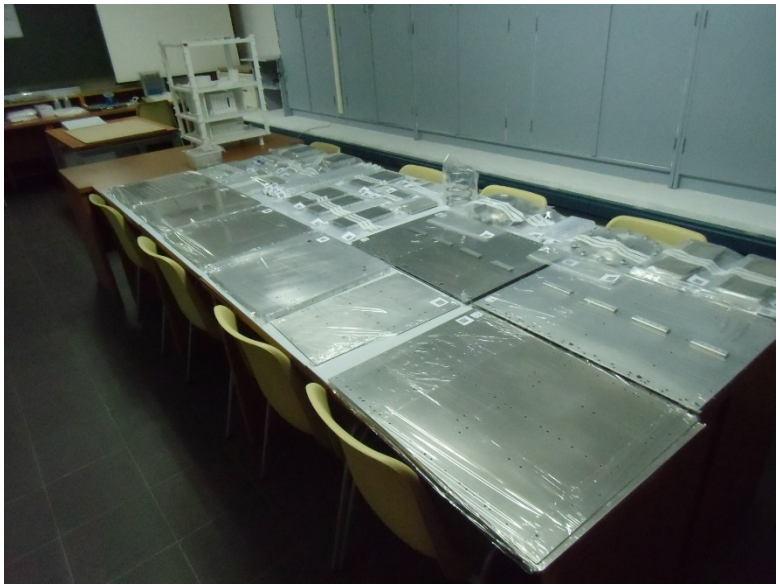

Fig. 1: Diferentes partes de la estructura STM del UPMSat-2

1. Descripción del trabajo:

Descripción del trabajo:

1. Realización de hojas ordenadas de procesos de montaje donde se indique:
   a) Fase de montaje.
   b) Descripción general.
   c) Proceso descriptivo de operaciones.
      - Limpieza.
      - Verificación.
      - Herramientas.
      - Par de apriete.
      - Montaje.
      - Verificación final.
   d) Imagen descriptiva del montaje
      - Piezas.
      - Elementos de unión.
      - Orden de montaje.
2. Generación de listas de verificación

1. Descripción del trabajo:

Normas de aplicación:

ECSS-Q-ST-70C Rev.1
Materials, mechanical parts and processes
ECSS-Q-ST-70-71C
Materials, processes and their data selection
ECSS-Q-ST-70-01C
Cleanliness and contamination control
ECSS-E-ST-10-09C
Reference coordinate system
ECSS-E-ST-10-03C
Annex A (normative)
Assembly, integration and test plan (AITP) - DRD
ECSS-E-HB-32-23A
Threaded fasteners handbook
ECSS-D-00-02A
Drafting rules and template for ECSS Handbooks

2. *Mechanical Assembly Procedure*. Ejemplo de procedimiento

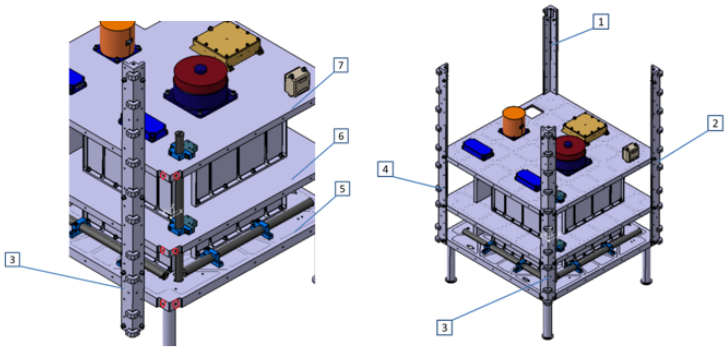

Figure 59 – Attachment location of L-profiles on Trays

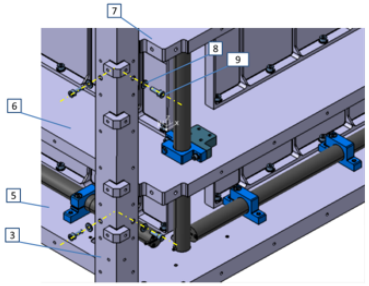

Figure 60 – Joint detail of L-profiles with Trays

Table 53 – L-profiles beams / Trays Part List

#	Element	Reference
1	L-Profil Beam 1	US2-E-CM-40510AC-04F-P_SP1A
2	L-Profil Beam 2	US2-E-CM-40610AC-04F-P_SP2A
3	L-Profil Beam 3	US2-E-CM-40710AC-04F-P_SP3A
4	L-Profil Beam 4	US2-E-CM-40810AC-04F-P_SP4A
5	Tray A	US2-E-CM-40100AC-05C-P_TAA
6	Tray B	US2-E-CM-40200AC-04A-P_TBA
7	Tray C	US2-E-CM-40300AC-04A-P_TCA
8	Plain Washer M4	EN-ISO-7089-M4x9
9	Screw M4x12	EN-ISO-4762-M4x12

4.1. Structure Subsystem

4.1.1 TRAYS / L-PROFILE BEAMS (SEPARATOR)

This interface is composed of the Tray lateral face and the L-profile beams (separators).

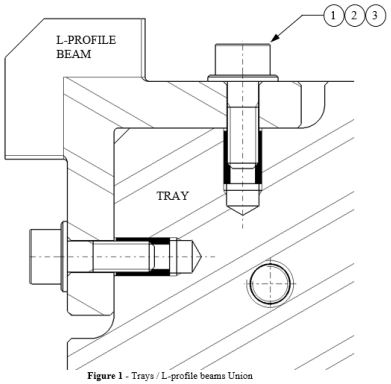

Figure 1 - Trays / L-profile beams Union

Table 1 - Trays / L-profile beams fixing elements

N	ELEMENT	REFERENCE	NUMBER
1	SCREW M4x12	EN-ISO-4762-M4x12	32
2	PLAIN WHASER M4	EN-ISO-7089-M4x9	32
3	HELICOIL®plus FREE RUNNING	4130-004-0008-M4	32

2. *Mechanical Assembly Procedure*. Ejemplo de procedimiento

Assembly	Steps	Illustration
Section 4.1 **-Z Tray**	Assemble in the following order: • S-Band radio • UHF radio • Stake radio screws • GSE support legs • Tie-wraps (not shown) • Radio harness partial assembly • Radio cover • Battery assemblies • BCDR partial harness assembly • GPS board • Separation switches • Sep. Switch partial harness ass. • Reaction wheels (RW) • RW partial harness assembly • Install +/- Y Sun sensors • Tighten and stake screws	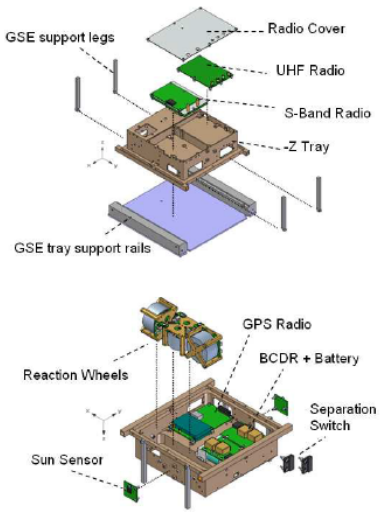
Section 4.2 **+Z Tray**	Assemble in the following order: • Tie-wraps • VHF radio/ stake screws • ISL radio/ stake screws • Rate Sensor • Radio Cover • GPS antenna • GSE support legs • Imager • Computer Board Stack • Partial assembly of mission specific harness • Tighten and stake screws.	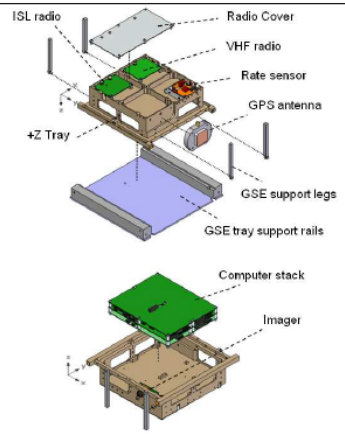

Section 4.3 - Section 4.6 **X and Y Panel**	Assemble in the following order (if applicable): • Panel to GSE • Solar cell and Sun sensor filter verification • Install ISS • Install magnetorquer (+X/+Y) • Wiring harness routing • Mount sun sensor (X panels) • Tighten and stake screws	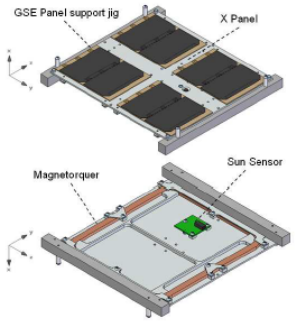
Section 4.7 - Section 4.8 **+/-Z panel**	Assemble in the following order (if applicable): • Panel to GSE • Solar cell, S-Band and Sun sensor filter verification • UHF connectors with RF terminators • Install magnetorquer (-Z) • Sun sensor • VHF antenna connectors • Wiring harness routing • Magnetometer (+Z) • Tighten and stake screws	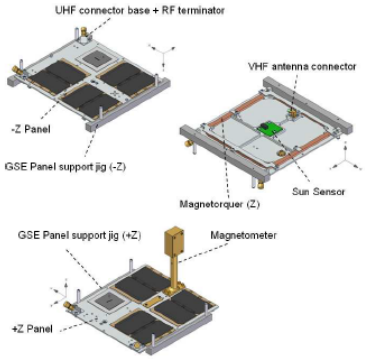
Section 4.9 **BRITE payload**	Do the following for the BRITE payload: • Mount telescope support structure to the telescope • Install Star-tracker mounting bracket • Install Star-tracker to mounting bracket	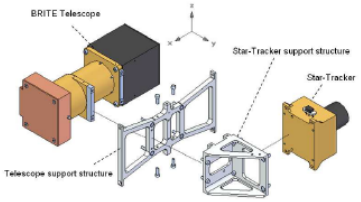

Integración y Procesos de Montaje

2. *Mechanical Assembly Procedure*. Ejemplo de procedimiento

Title

Step 15: Assemble +Y and -Y panels

Description

Refer to Figure 47 for panel orientation. This step requires two people. DO NOT *attempt this step alone.*

Caution notes

Procedures

- Take pictures of both +Y and –Y faces
- Unscrew all 4 screws holding the +Y panel to its panel jigs
- Place +Y panel near +Y face and hold at an angle so that -Z side is away from the tray.
- Connect J107 connector to Power board and stake
- Assemble the +Y panel to the +Y face with the inner-most screws in the Y direction **(4-40 x 0.3125in Socket head screw [4])**
- Assemble the +Y panel to the +Y face with the outer-most screws in the Y direction **(4-40 x 0.5in Socket head screw [4])**
- **[CanX-4/-5]** Fasten the X panels to the +Y panel with screws in the X direction **(4-40 x 0.375in Socket head screw [6])**
- **[BRITE]** Fasten the X panels to the +Y panel with screws in the X direction, with a button head screw next to the sun sensor on the –X face and socket head screws elsewhere **(4-40 x 0.375in Socket head screw [5], 4-40 x 0.375in Button head screw [1])**
- Unscrew all 4 screws holding the -Y panel to its panel jigs
- Place -Y panel near -Y face and hold at an angle so that -Z side is away from the tray.
- Connect J108 connector to Power board and stake
- **[CanX-4/-5]** Connect the J097 ISS connector to the FFC and stake
- Assemble the -Y panel to the +Y face with the inner-most screws in the Y direction **(4-40 x 0.3125in Socket head screw [4])**
- Assemble the -Y panel to the -Y face with the outer-most screws in the Y direction **(4-40 x 0.5in Socket head screw [4])**
- Fasten the X panels to the -Y panel with screws in the X direction **(4-40 x 0.375in Socket head screw [6])**
- Perform functional test for the solar cells, temperature sensor for the +/- Y panels
- Perform functional test for the +Y magnetorquer
- **[CanX-4/-5]** Perform functional test for the ISS

Photo ( ) symbol

Mission color code

green: ***[BRITE]***

blue: ***[CanX-4/-5]***

[Hardware used]

Image

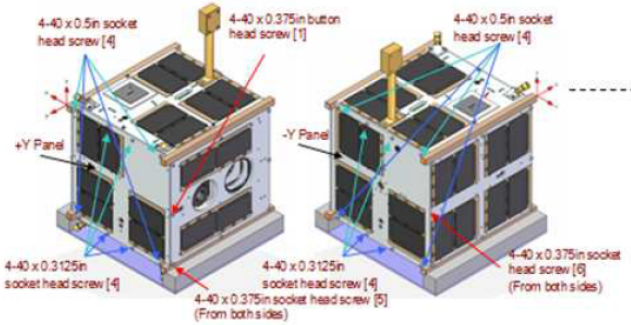

Coordinate system