UNIVERSIDAD DEL ISTMO DE GUATEMALA
FACULTAD DE INGENIERIA
ELECTRONICA 2 Y DISENO ELECTRICO 1
PROYECTO FINAL

DIEGO SOLÍS
12/05/26

Title <Title>		
Size B	Document Number <Doc>	Rev <RevCode>
Date: Tuesday, May 12, 2026	Sheet 1 of 5	

SECTION	PG. #
POWER	3
PCI 11400	4

Title <Title>		
Size B	Document Number <Doc>	Rev <RevCode>
Date: Tuesday, May 12, 2026	Sheet 2 of 5	

POWER

12VDC TO 5VDC

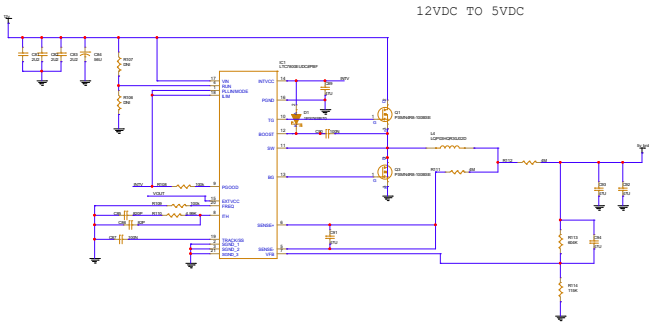

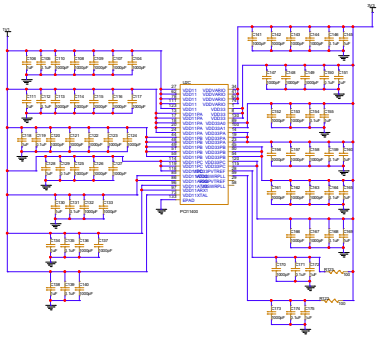

5VDC TO 3V3VDC

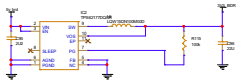

3.3VDC A 1.1VDC

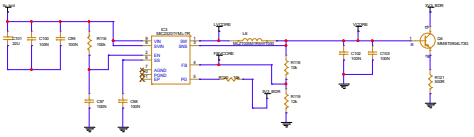

Title	<title>	
Size	Document Number	Rev
D	<Doc>	<Rev>
Date: Tuesday, May 13, 2008	Sheet 5 of 5	

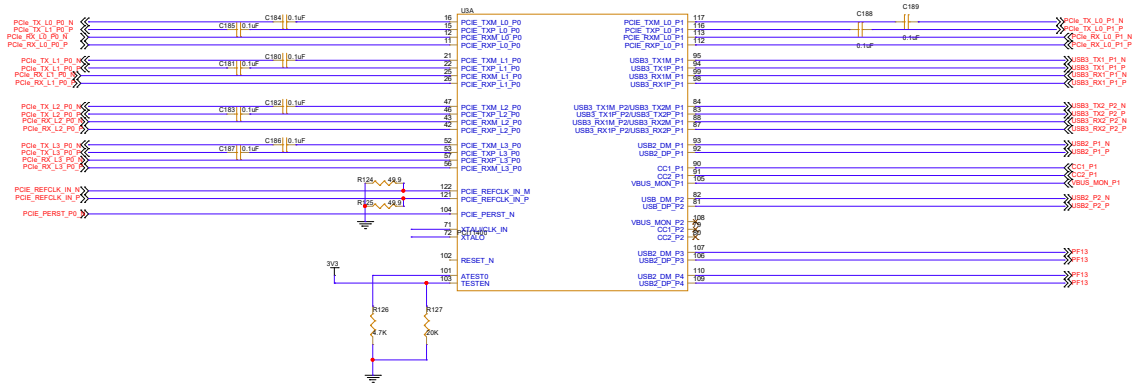

Title	<Title>		
Size C	Document Number <Doc>		Rev <RevCode>
Date: Tuesday, May 12, 2026	Sheet 5 of 5		