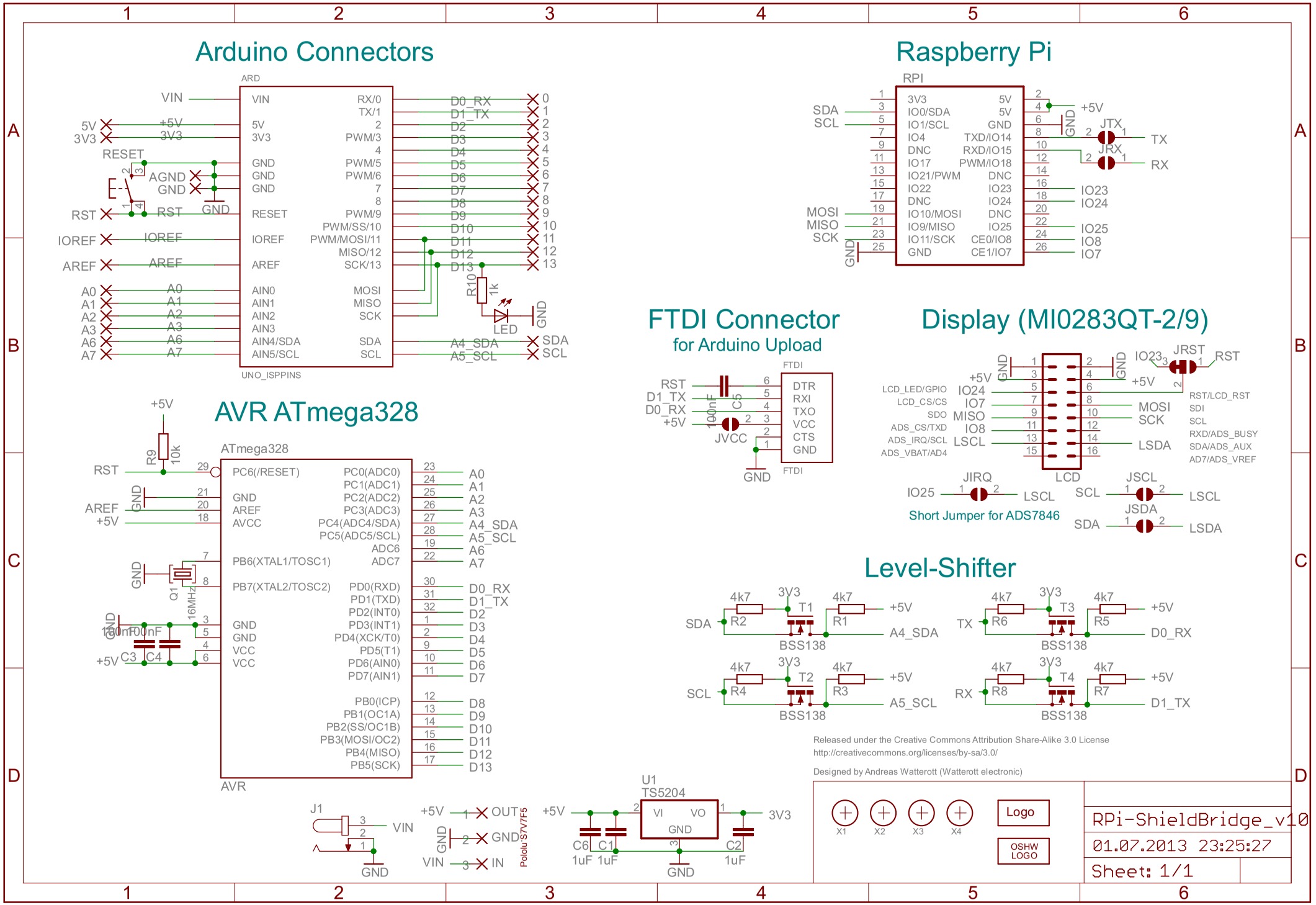
Arduino Connectors
ARD
VIN
5V
3V3
RESET
AGND
GND
RST
IOREF
AREF
A0
A1
A2
A3
A6
A7
RX/0
TX/1
PWM/3
PWM/5
PWM/6
PWM/9
PWM/SS/10
PWM/MOSI/11
MISO/12
SCK/13
MOSI
MISO
SCK
SDA
SCL
D0_RX
D1_TX
D2
D3
D4
D5
D6
D7
D8
D9
D10
D11
D12
D13
A4_SDA
A5_SCL
R10
1k
LED
UNO_ISPPINS
Raspberry Pi
RPI
3V3
IO0/SDA
IO1/SCL
IO4
DNC
IO17
IO21/PWM
IO22
DNC
IO10/MOSI
IO9/MISO
IO11/SCK
GND
5V
TXD/IO14
RXD/IO15
PWM/IO18
IO23
IO24
IO25
IO8
IO7
JTX
JRX
TX
RX
FTDI Connector
for Arduino Upload
FTDI
DTR
RXI
TXO
VCC
CTS
JVCC
Display (MI0283QT-2/9)
LCD
IO23
JRST
RST
LCD_LED/GPIO
LCD_CS/CS
SDO
ADS_CS/TXD
ADS_IRQ/SCL
ADS_VBAT/AD4
RST/LCD_RST
SDI
SCL
RXD/ADS_BUSY
SDA/ADS_AUX
AD7/ADS_VREF
JIRQ
JSCL
JSDA
LSCL
LSDA
Short Jumper for ADS7846
AVR ATmega328
ATmega328
R9
10k
PC6(/RESET)
PB6(XTAL1/TOSC1)
PB7(XTAL2/TOSC2)
AVCC
Q1
16MHz
C3
C4
100nF
PC0(ADC0)
PC1(ADC1)
PC2(ADC2)
PC3(ADC3)
PC4(ADC4/SDA)
PC5(ADC5/SCL)
ADC6
ADC7
PD0(RXD)
PD1(TXD)
PD2(INT0)
PD3(INT1)
PD4(XCK/T0)
PD5(T1)
PD6(AIN0)
PD7(AIN1)
PB0(ICP)
PB1(OC1A)
PB2(SS/OC1B)
PB3(MOSI/OC2)
PB4(MISO)
PB5(SCK)
AVR
Level-Shifter
4k7
3V3
T1
T2
T3
T4
R1
R2
R3
R4
R5
R6
R7
R8
BSS138
A4_SDA
A5_SCL
D0_RX
D1_TX
J1
OUT
IN
Pololu S7V7F5
U1
TS5204
VI
VO
3V3
C6
C1
C2
1uF
Released under the Creative Commons Attribution Share-Alike 3.0 License
http://creativecommons.org/licenses/by-sa/3.0/
Designed by Andreas Watterott (Watterott electronic)
X1
X2
X3
X4
Logo
OSHW LOGO
RPi-ShieldBridge_v10
01.07.2013 23:25:27
Sheet: 1/1

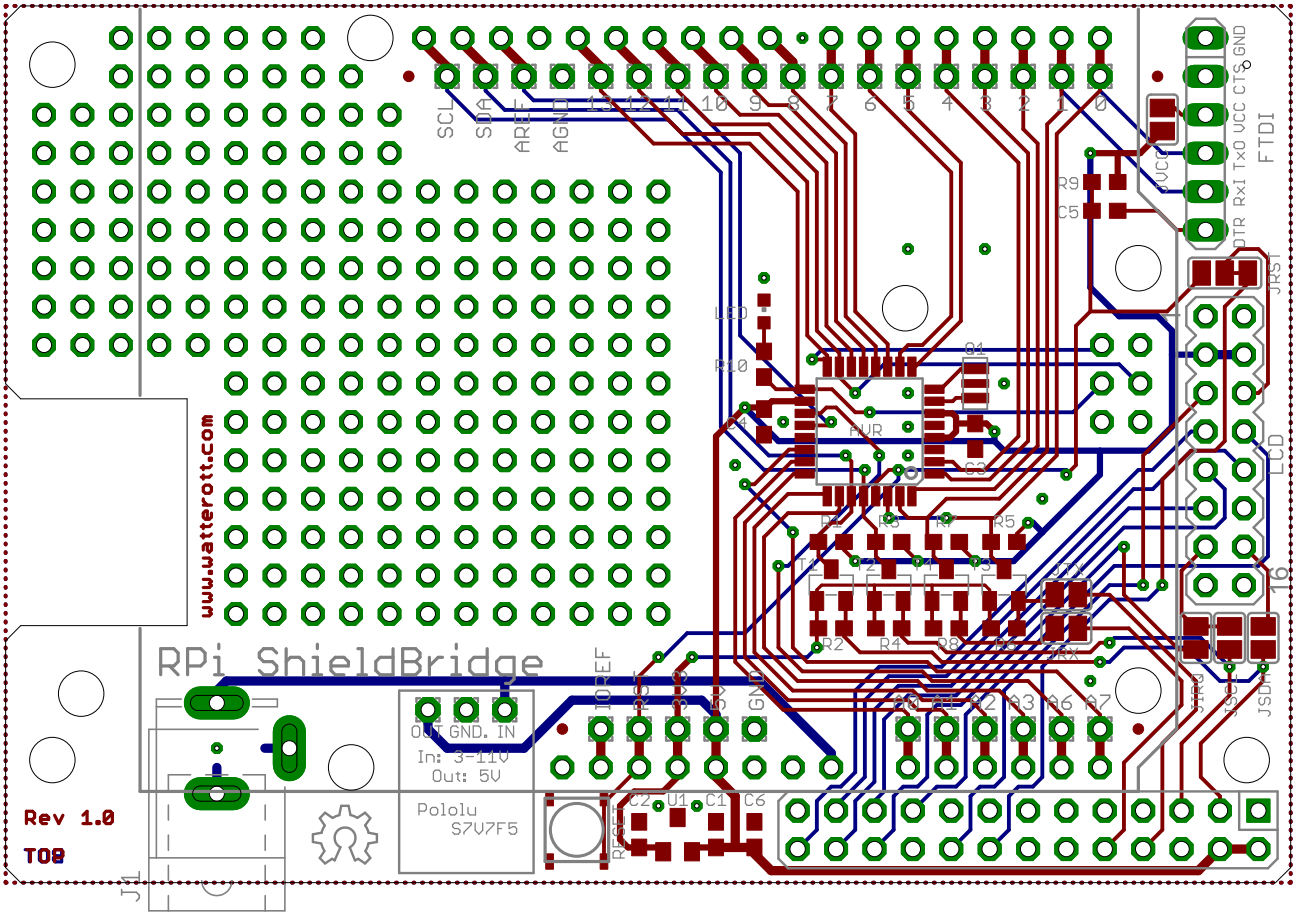
RPi ShieldBridge
www.watterott.com
Rev 1.0
TOP
SCL
SDA
AREF
AGND
13 12 11 10 9 8 7 6 5 4 3 2 1 0
FTDI
DTR RxI TxO VCC CTS GND
JRST
LCD
16
JSDA
JSCL
JTAG
IOREF
GND
OUT GND. IN
In: 3-11V
Out: 5V
Pololu
S7V7F5
J1
LED
R10
R9
C5
Q1
C3
R5
R4
R8
R2
R3
R6
R7
C2
U1
C1
C6