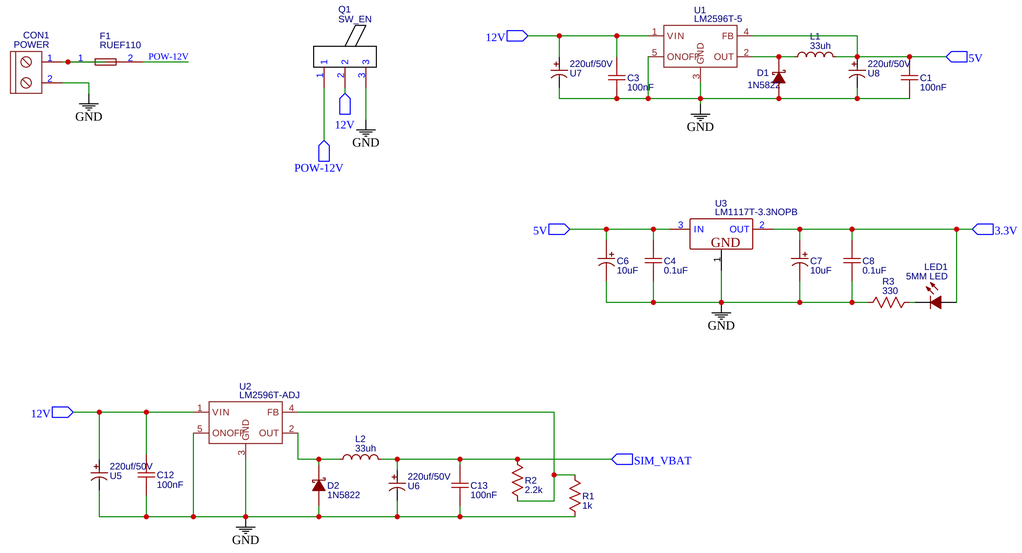

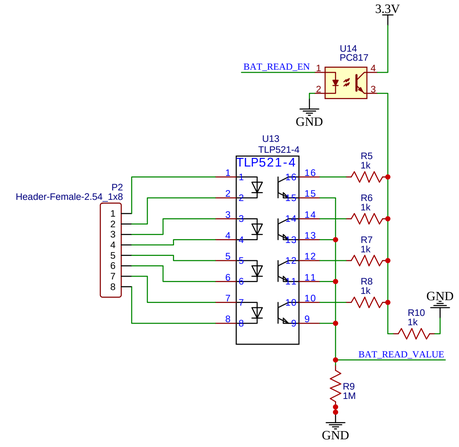

TITLE: Sheet_1		REV: 1.0
EasyEDA	Company: Your Company	Sheet: 1/1
	Date: 2020-04-01 Drawn By: dienvx1997bn	

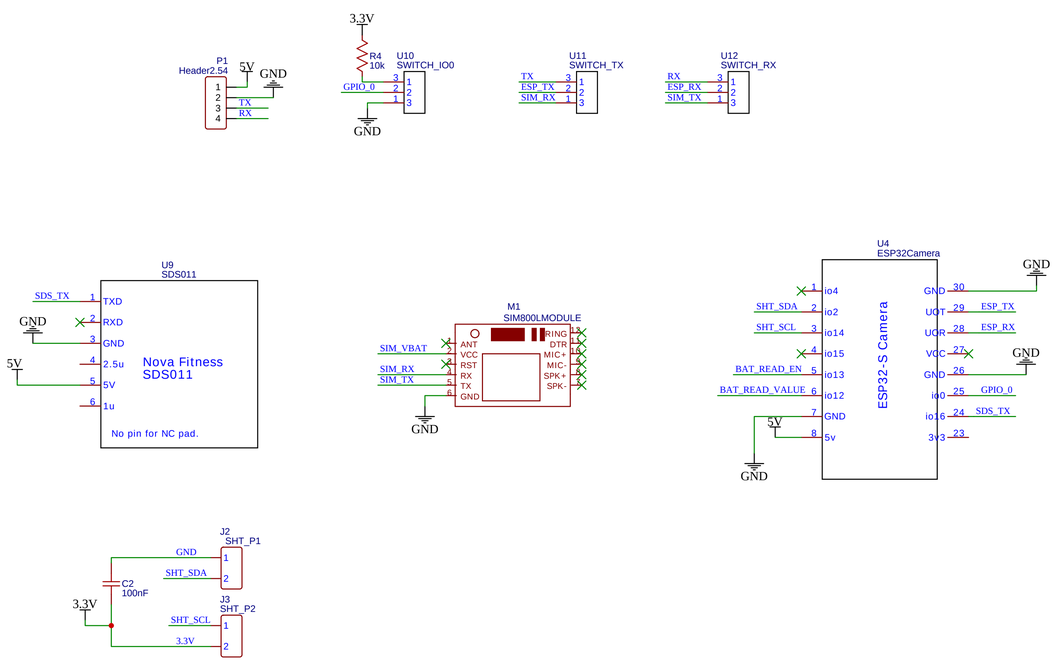

TITLE: Sheet_1		REV: 1.0
EasyEDA	Company: Your Company	Sheet: 1/1
	Date: 2020-04-01 Drawn By: dienvx1997bn	