Vorderansicht (kurze Helices in Bildebene)

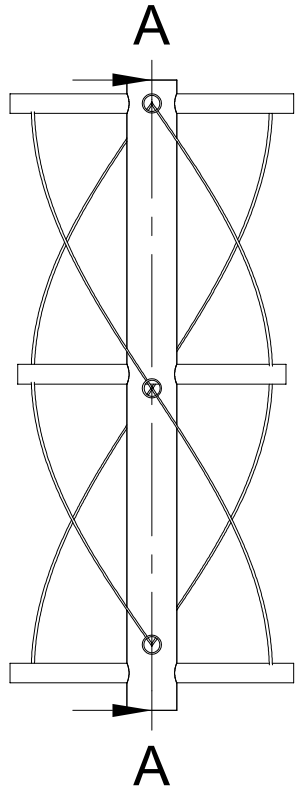

Schnittansicht (lange Helices in Bildebene)

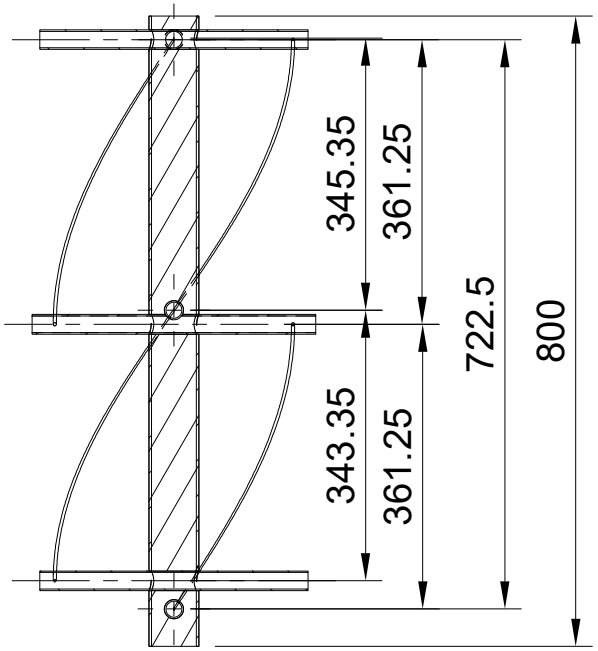

A-A (1:10)

Vorschau finales Gerüst der QFH-Antenne

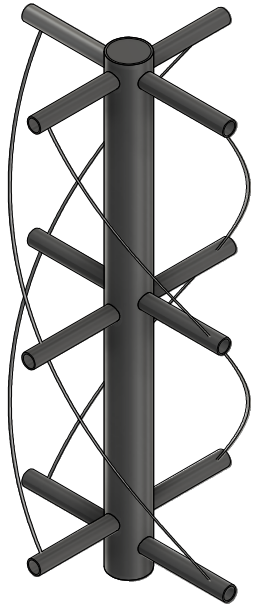

Dept. Vision-Ing 21	Technical reference	Created by Dustin Bichler 02.01.2026	Approved by
		Document type draft	Document status final
		Title QFH-Antenne final 1:10 1x	DWG No.
			Rev. 2 / Date of issue / Sheet 1/1