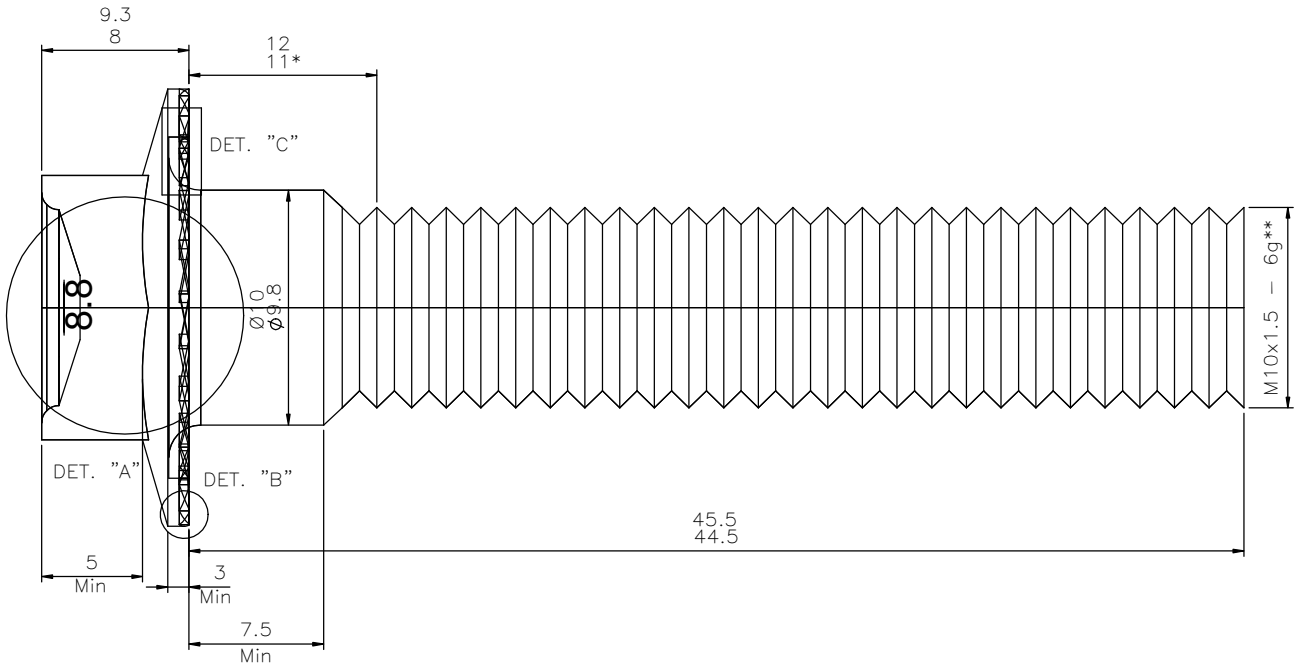

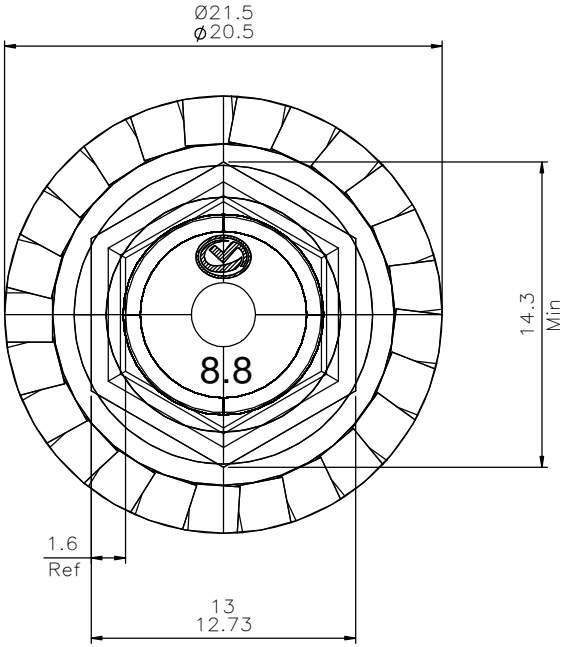

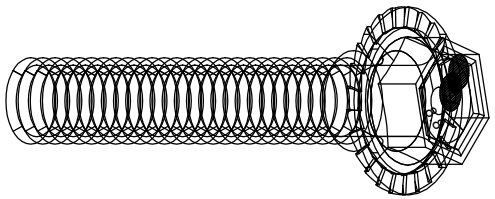

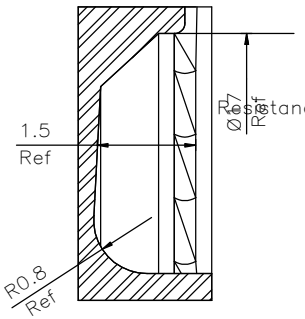

DETAIL "C"

Dimensions According	COMIL Standard
Material:	Boron Low Carbon Steel
Heat Treatment:	Quenched and Tempered 8.8
Superficial Treatment	BICHROMATIC

Surface Thickness: 5a8u
Resistance: Salt Spray: 48 hours CB; 72 hours CV

* Measured in the complete fillet
** Before coating

MECHANICAL PROPERTIES		
Test	Standard	Specification
Chemical Composition	ISO 898–1	According standard
Traction (rupture)	ISO 898–1	800 N/mm
Traction (flow)	ISO 898–1	640 N/mm
Hardness	ISO 898–1	22–32 HRC

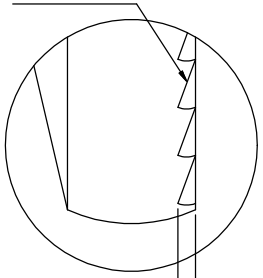

DETAIL "A"

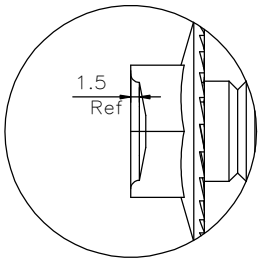

DETAIL"B"

POS.	CODIGO	QTD.	U.M.	DESCRICAO / MATERIAL – DIMENSOES	PESO

COMIL

PROJ.:
DES.:
REV.:
APROV.:
G/ESTQ FAMILIA ITEM

PESO LIQUIDO: Esc Cad:
DESCRICAO:

ALTERACAO
NOME
DATA
POS.

CAD