HARD	Product Table	Table Nº
		Revision Nº

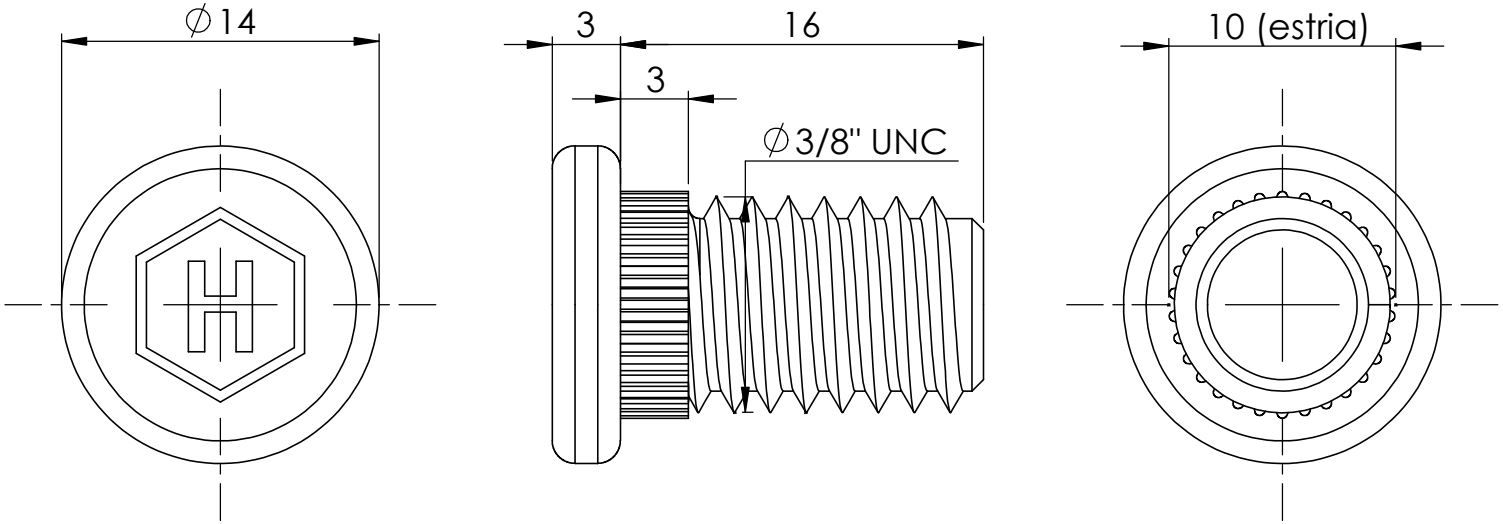

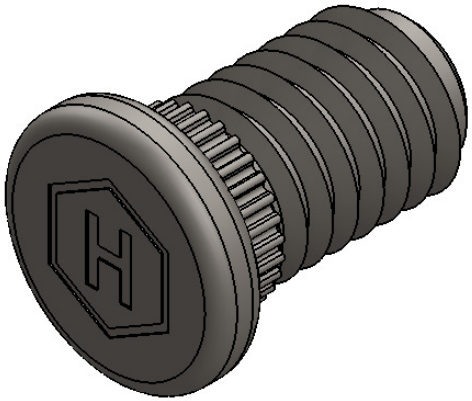

Material e Propriedades Mecânicas:
Conforme Norma ASTM A307

Tratamento superficial:
Zincado Eletrolítico Branco Mín. 5 µm , Mín. 48 Horas de Névoa Salina (ASTM B117)

HARD COM. DE FIX. E RESINAS LTDA.
Joinville/SC-Brasil
Phone: (47) 4009-7209
Fax: (47) 4009-7217
www.hard.com.br

*This drawing is of Hard's property and it is given in confidential purposes.It should manufacture purposes without Hard's express written consent HARD*DIN 34

Drawer	Approval	Revisions in project	Date