POWER FLOW

17/03/2026

Mohamed Bahloul
VITO / KU Leuven – EnergyVille

Role of the Power Flow Analysis

We know the model of the main grid elements
Transmission lines, transformers, generators, etc…

How do they interact in a network environment?
We want to analyze the operation of a large scale system

The Power Flow can be used for Analysis
To analyze the system operation under known conditions

The Power Flow can be used for Dispatching
To compute the best operating conditions for a given demand

The Power Flow can be used for Planning
To evaluate maintenance, extensions, changes to the grid

We will focus on the Power Flow for Analysis
Dispatching and Planning require optimization theory

Assumptions and End Goal

In which conditions do we analyze the system?
We need to do some simplifications for the analysis

Symmetrical/Balanced Steady-State Operation
Different power flows algorithms are used for the general case

Equivalent Single-Phase System
To analyze only the direct sequence components

What do we want to compute with the analysis?
What is the end-goal of the power flow computation?

All the voltage magnitudes in the network
To identify overvoltages/undervoltages and drops

All the current magnitudes in the network
To verify that they are compliant to the capacity of lines

All the active powers in the network
To evaluate losses and the power required from the sources

All the reactive powers in the network
To evaluate the reactive power required from the sources

Network Elements – Transmission Lines

Modeled with the Π Circuit
Model for long or short lines are known

Series Impedance

$$\dot{Z}_{series} = \dot{B} = \dot{Z}_c \sinh(\dot{\gamma} l) \approx (R + \mathrm{j}\omega L) \cdot l$$

Shunt Admittance

$$\frac{\dot{Y}_{shunt}}{2} = \frac{\dot{A} - 1}{\dot{B}} = \frac{\cosh(\dot{\gamma} l) - 1}{\dot{Z}_c \sinh(\dot{\gamma} l)} \approx \frac{\mathrm{j}\omega C}{2} \cdot l$$

Propagation Constant

$$\dot{\gamma} = \sqrt{(R + \mathrm{j}\omega L)(G + \mathrm{j}\omega C)}$$

Surge Impedance

$$\dot{Z}_c = \sqrt{\frac{R + \mathrm{j}\omega L}{G + \mathrm{j}\omega C}}$$

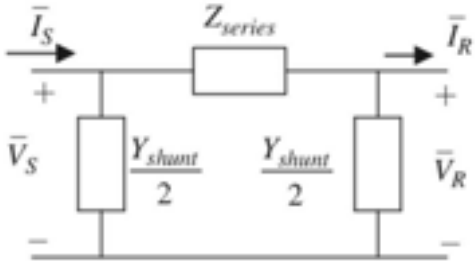

Model for long lines

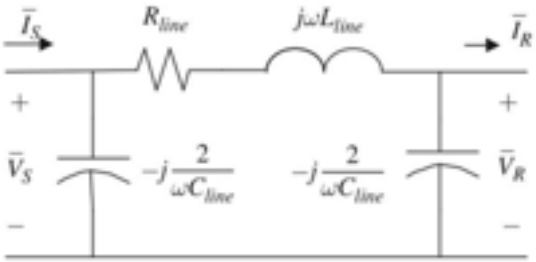

Model for short lines

$l \ll \lambda$

Network Elements – Transformers

Equivalent T model
For more detailed analysis

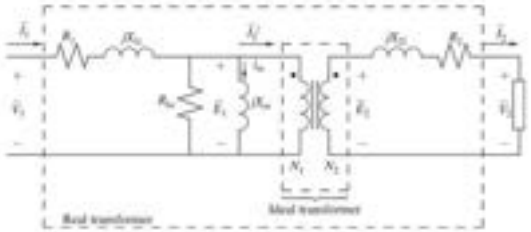

Equivalent T Model

Modeled with a series impedance
The magnetizing branch is typically neglected

No ideal transformer in p.u. values
Model with a simple p.u. impedance

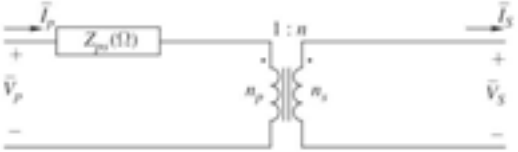

Simplified Model

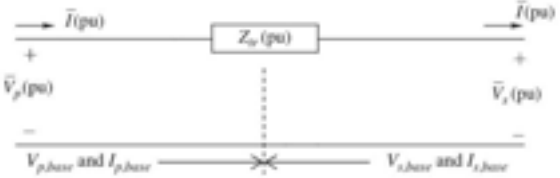

Simplified Model (in p.u.)

Network Elements – Transformers

Modeled with a series impedance
The magnetizing branch is typically neglected

Different model for off-nominal ratios
To consider the effect of tap changers

Modeled with the Π Circuit
Combines impedance and transformation ratio

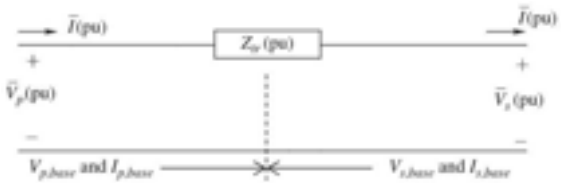

Simplified Model (in p.u.)

Shunt Admittance (primary side) $\dot{y}_{10} = \dot{y}_l\left(1 - \frac{1}{t}\right)$

Shunt Admittance (secondary side) $\dot{y}_{20} = \dot{y}_l\left(\frac{1}{t^2} - \frac{1}{t}\right)$

Series Admittance $\dot{y}_{12} = \frac{\dot{y}_l}{t}$

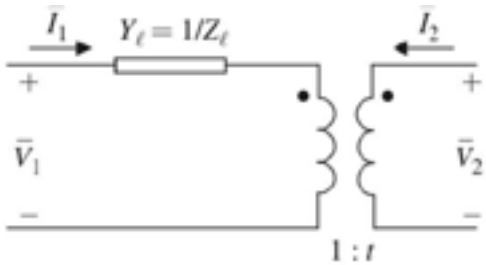

Model for off-nominal ratios (in p.u.)

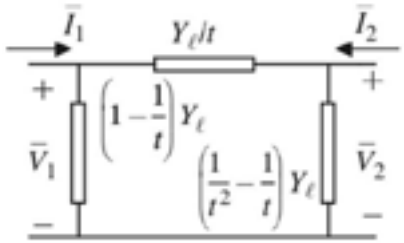

Π Equivalent Circuit

Network Elements – Synchronous Machines

Voltage source with impedance
The magnetizing branch is typically neglected

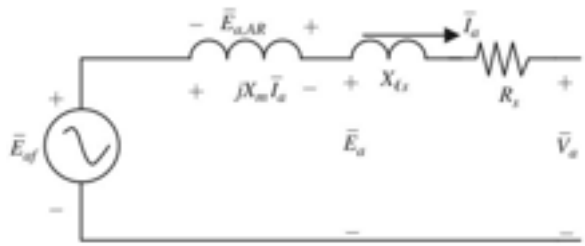

Model without controlled voltage at the PCC

Automatic Voltage Regulation (AVR)
The excitation is adapted to the PCC voltage

Model with only a voltage source
Excitation control neutralizes the impedance

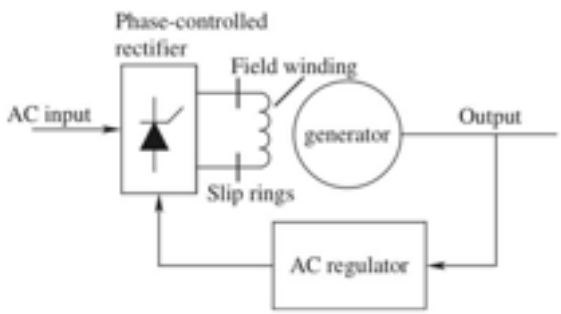

Excitation control based on the voltage at the PCC

Model with voltage controlled at the PCC

Network Elements – Loads

Passive loads with impedances
Used for reactors, compensators, etc…

Active loads for power delivery
We know the active and reactive power

Simple model of sub-networks
Model of all the power of a smaller network

The Impedance model depends on the voltage
The active and reactive powers depend on the terminal voltage

The P-Q model does not depend on the voltage
It assumes the same P and Q regardless of the terminal voltages

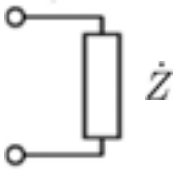

Passive Load (Impedance Model)

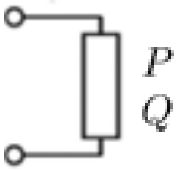

Generic Load (Power Model)

Network Model

- **Model with interconnected buses**
  Interconnected with transmission lines or transformers
- **All the impedances are part of the network**
  Including all series and shunt impedances
- **Sources and power loads are external**
  They are not modelled as internal network elements

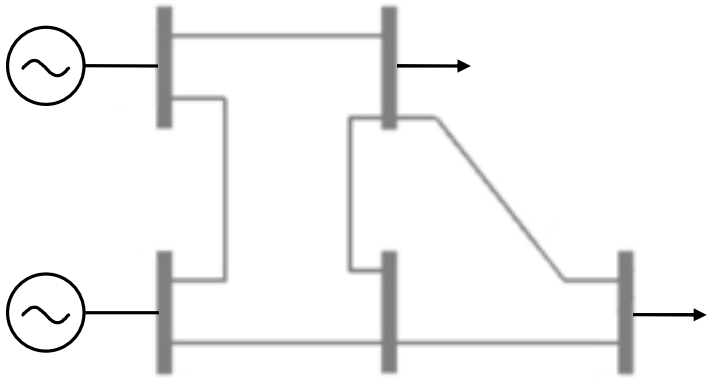

Type of Buses

- **Load Buses**
  - Assigned Active Power P
  - Assigned Reactive Power Q
- **Interconnection Buses**
  - Assigned Active Power $P = 0$
  - Assigned Reactive Power $Q = 0$
- **Generator Buses**
  - Assigned Voltage Magnitude V
  - Assigned Active Power P

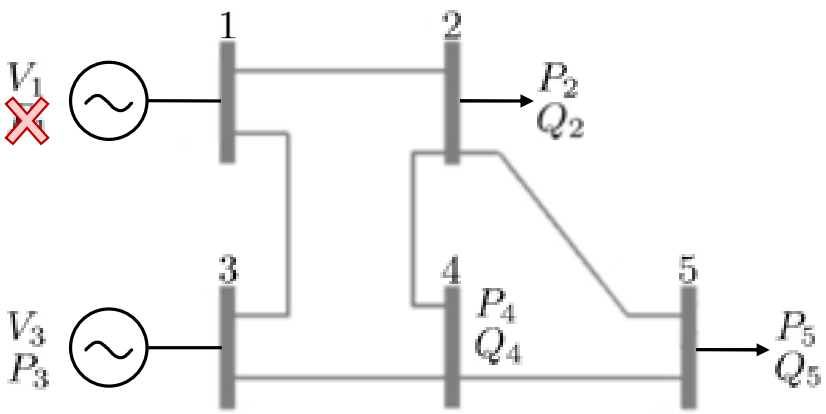

We need to have a reference for the phase angle
All the phasors angles are referred to the same reference

We cannot impose active power in all the buses
Otherwise we intrinsically impose the losses of the network

Type of Buses

- **Load Buses**
  - Assigned Active Power P
  - Assigned Reactive Power Q
- **Interconnection Buses**
  - Assigned Active Power $P = 0$
  - Assigned Reactive Power $Q = 0$
- **Generator Buses**
  - Assigned Voltage Magnitude V
  - Assigned Active Power P
- **Slack Bus**
  - Assigned Voltage Magnitude V
  - Assigned Voltage Phase $\theta = 0°$

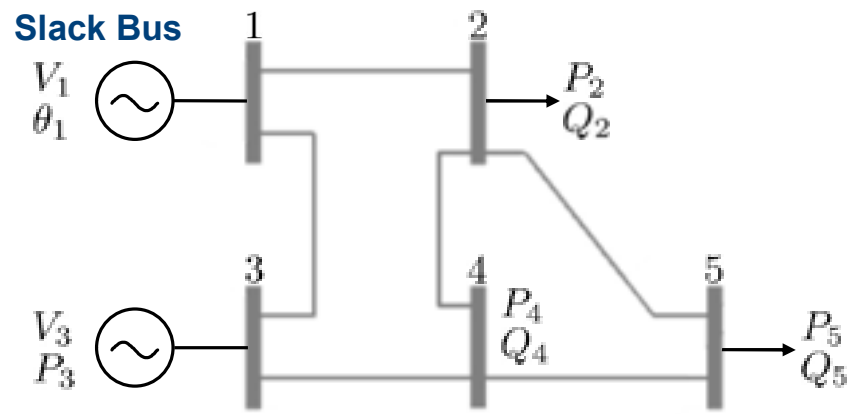

We need to have a reference for the phase angle
All the phasors angles are referred to the same reference

We cannot impose active power in all the buses
Otherwise we intrinsically impose the losses of the network

Power Flow Formulation Steps

How do we formulate the power flow problem?
We divide the formulation in two steps

STEP 1: Model of the network
Aimed to find the circuital relationship between the buses

STEP 2: Effect of the Bus constraints
Aimed to consider the constraints on voltages and powers

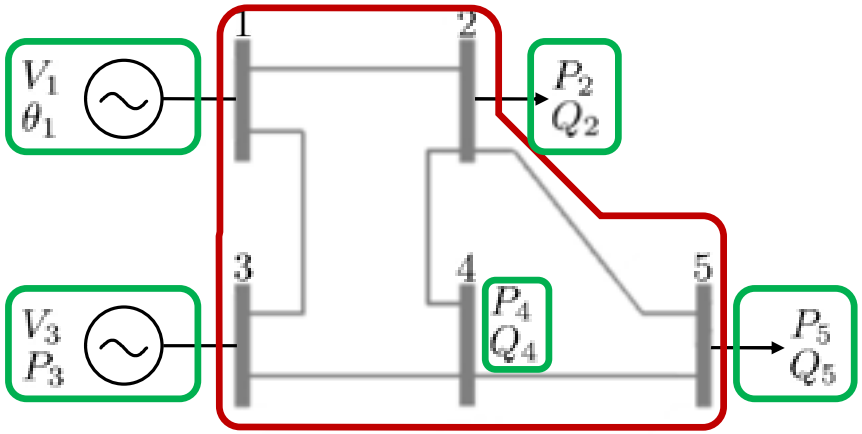

Network Representation

How do we mathematically represent the network?
We need to find the relationships between different buses

The network elements are represented by impedances
Series (between buses) and shunt (towards ground) impedances

The network doesn't include any voltage/current source
They have been modeled as external elements acting on the buses

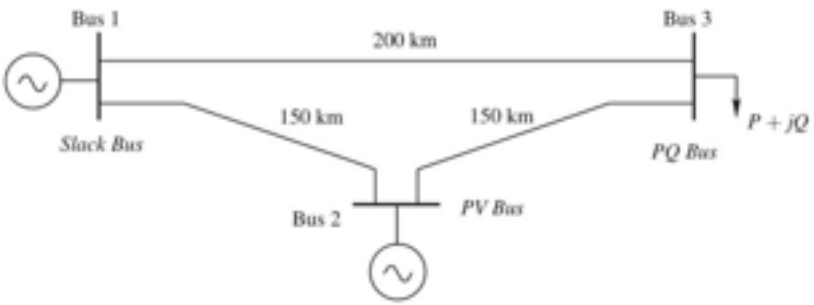

We can use a nodal current representation
We assume to inject a known current in each bus

Network Representation

How do we mathematically represent the network?
We need to find the relationships between different buses

We can use a nodal current representation
We assume to inject a known current in each bus

We obtain a circuit with n+1 nodes and m branches
With n Bus Nodes and 1 Ground Node

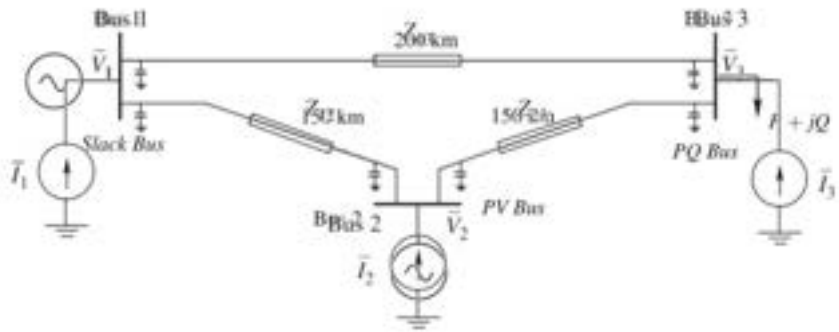

We can obtain a Nodal Admittance Matrix
We can link the voltages and currents at each bus

There are no other internal nodes in the network
Each internal node has been considered as an interconnection bus

There are no sources in the network
All the voltage and current sources are modelled at the bus nodes

The ground node is not a bus
It is only used as a reference point for the other buses

The bus currents are injected into the network
We consider the network as a passive multiport system

Network Representation

We can obtain a Nodal Admittance Matrix
We can link the voltages and currents at each bus

$$\underbrace{\begin{bmatrix} \bar{I}_1 \\ \bar{I}_2 \\ \vdots \\ \bar{I}_n \end{bmatrix}}_{\bar{\boldsymbol{I}}} = \underbrace{\begin{bmatrix} \dot{Y}_{11} & \dot{Y}_{12} & \cdots & \dot{Y}_{1n} \\ \dot{Y}_{21} & \dot{Y}_{22} & \cdots & \dot{Y}_{2n} \\ \vdots & \vdots & \ddots & \vdots \\ \dot{Y}_{n1} & \dot{Y}_{n2} & \cdots & \dot{Y}_{nn} \end{bmatrix}}_{\dot{\boldsymbol{Y}}} \cdot \underbrace{\begin{bmatrix} \bar{V}_1 \\ \bar{V}_2 \\ \vdots \\ \bar{V}_n \end{bmatrix}}_{\bar{\boldsymbol{V}}}$$

Bus Currents — Network Admittances — Bus Voltages

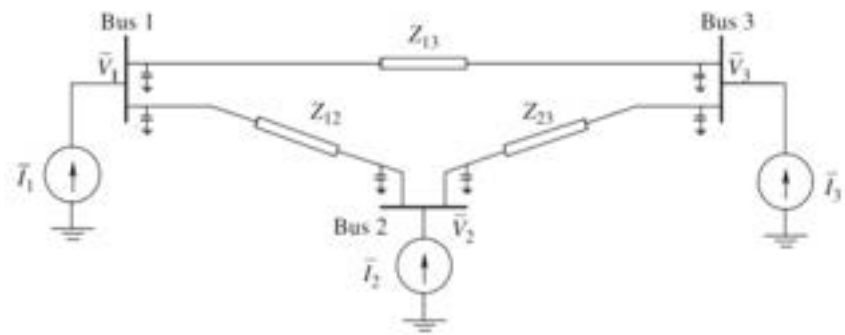

How do we compute the admittance matrix coefficients?
We need to find a way to compute it fast, even for big scale networks

The bus currents are injected into the network
We consider the network as a passive multiport system

Admittance Matrix Calculation

How do we compute the admittance matrix coefficients?
We need to find a way to compute it fast, even for big scale networks

Nodal Currents from the Admittance Matrix Representation:

$$\begin{bmatrix} \bar{I}_1 \\ \bar{I}_2 \\ \vdots \\ \bar{I}_n \end{bmatrix} = \begin{bmatrix} \dot{Y}_{11} & \dot{Y}_{12} & \cdots & \dot{Y}_{1n} \\ \dot{Y}_{21} & \dot{Y}_{22} & \cdots & \dot{Y}_{2n} \\ \vdots & \vdots & \ddots & \vdots \\ \dot{Y}_{n1} & \dot{Y}_{n2} & \cdots & \dot{Y}_{nn} \end{bmatrix} \cdot \begin{bmatrix} \bar{V}_1 \\ \bar{V}_2 \\ \vdots \\ \bar{V}_n \end{bmatrix}$$

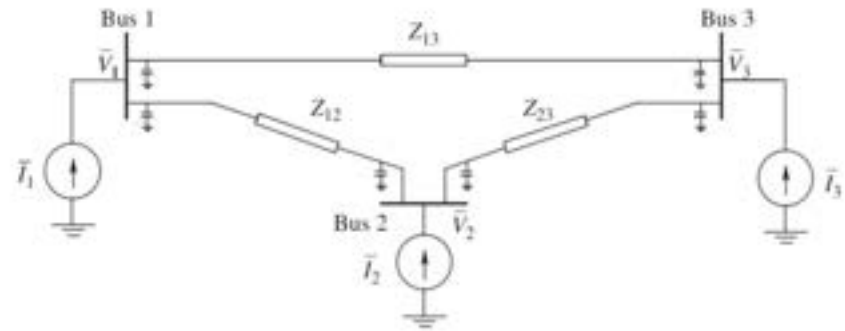

The bus currents are injected into the network
We consider the network as a passive multiport system

ADMITTANCE MATRIX CALCULATION

How do we compute the admittance matrix coefficients?
We need to find a way to compute it fast, even for big scale networks

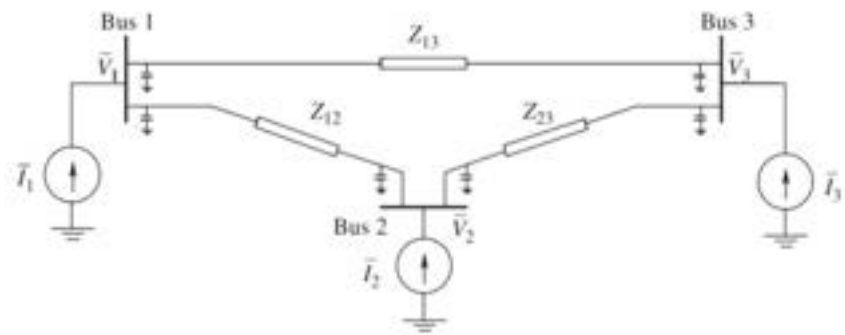

Nodal Currents from the Admittance Matrix Representation:

By expanding in all the n equations:

$$\begin{cases} \bar{I}_1 = \dot{Y}_{11}\bar{V}_1 + \dot{Y}_{12}\bar{V}_2 + \dot{Y}_{13}\bar{V}_3 + \cdots + \dot{Y}_{1n}\bar{V}_n \\ \bar{I}_2 = \dot{Y}_{21}\bar{V}_1 + \dot{Y}_{22}\bar{V}_2 + \dot{Y}_{23}\bar{V}_3 + \cdots + \dot{Y}_{2n}\bar{V}_n \\ \vdots \\ \bar{I}_n = \dot{Y}_{n1}\bar{V}_1 + \dot{Y}_{n2}\bar{V}_2 + \dot{Y}_{n3}\bar{V}_3 + \cdots + \dot{Y}_{nn}\bar{V}_n \end{cases}$$

For a generic node k:

$$\bar{I}_k = \dot{Y}_{k1}\bar{V}_1 + \dot{Y}_{k2}\bar{V}_2 + \dot{Y}_{k3}\bar{V}_3 + \cdots + \dot{Y}_{kn}\bar{V}_n = \sum_{h=1}^{n} \dot{Y}_{kh}\bar{V}_h$$

How do we compute the admittance matrix coefficients?
We need to find a way to compute it fast, even for big scale networks

The bus currents are injected into the network
We consider the network as a passive multiport system

ADMITTANCE MATRIX CALCULATION

How do we compute the admittance matrix coefficients?
We need to find a way to compute it fast, even for big scale networks

Nodal Currents from the Admittance Matrix Representation:

$$\bar{I}_1 = \dot{Y}_{11}\bar{V}_1 + \dot{Y}_{12}\bar{V}_2 + \dot{Y}_{13}\bar{V}_3 + \cdots + \dot{Y}_{1n}\bar{V}_n$$

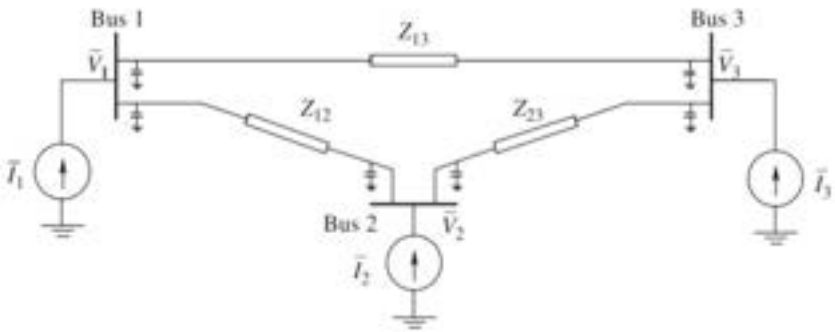

How do we compute the admittance matrix coefficients?
We need to find a way to compute it fast, even for big scale networks

The bus currents are injected into the network
We consider the network as a passive multiport system

ADMITTANCE MATRIX CALCULATION

How do we compute the admittance matrix coefficients?
We need to find a way to compute it fast, even for big scale networks

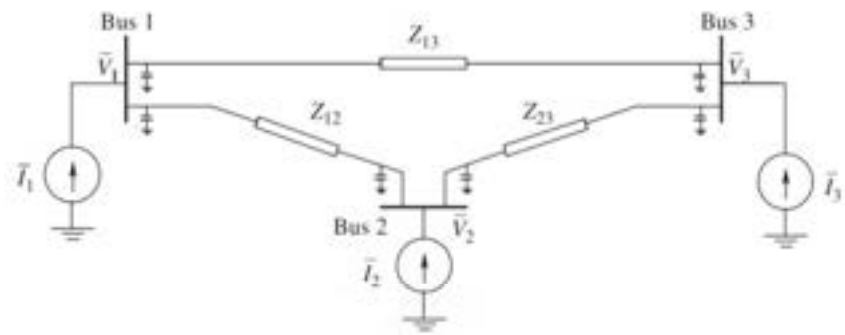

Nodal Currents from the Circuit representation:

$$\bar{I}_1 = \bar{I}_{10} + \bar{I}_{12} + \bar{I}_{13} + \ldots + \bar{I}_{1n}$$

$$= \frac{\bar{V}_1}{\dot{Z}_{10}} + \frac{\bar{V}_1 - \bar{V}_2}{\dot{Z}_{12}} + \frac{\bar{V}_1 - \bar{V}_3}{\dot{Z}_{13}} + \cdots + \frac{\bar{V}_1 - \bar{V}_n}{\dot{Z}_{1n}}$$

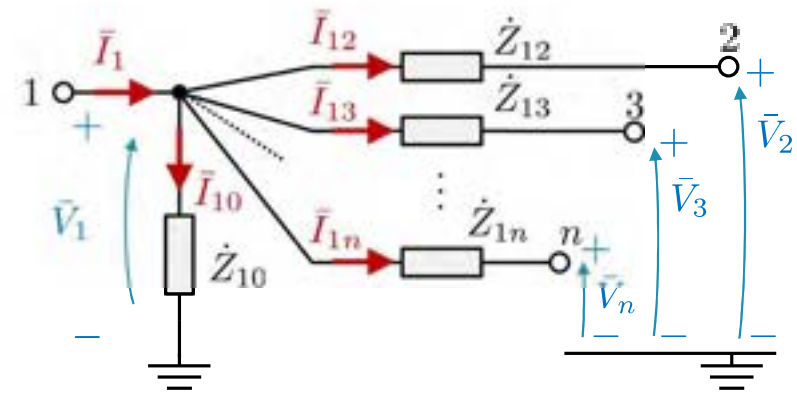

Nodal Currents from the Admittance Matrix Representation:

$$\bar{I}_1 = \dot{Y}_{11}\bar{V}_1 + \dot{Y}_{12}\bar{V}_2 + \dot{Y}_{13}\bar{V}_3 + \cdots + \dot{Y}_{1n}\bar{V}_n$$

ADMITTANCE MATRIX CALCULATION

How do we compute the admittance matrix coefficients?
We need to find a way to compute it fast, even for big scale networks

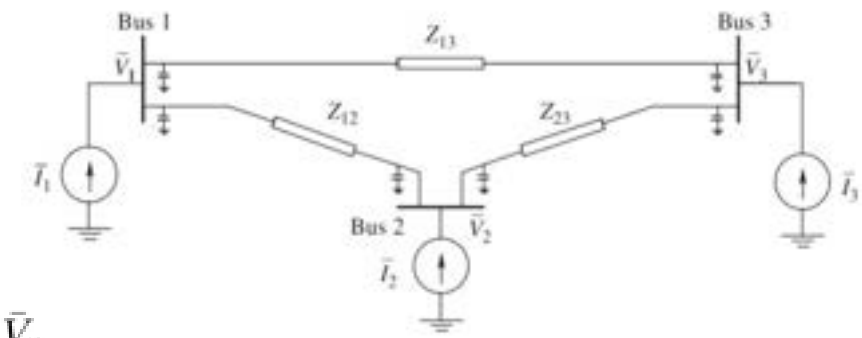

Nodal Currents from the Circuit representation:

$$\bar{I}_1 = \bar{I}_{10} + \bar{I}_{12} + \bar{I}_{13} + \ldots + \bar{I}_{1n}$$

$$= \left(\frac{1}{\dot{Z}_{10}} + \frac{1}{\dot{Z}_{12}} + \frac{1}{\dot{Z}_{13}} + \cdots + \frac{1}{\dot{Z}_{1n}}\right)\bar{V}_1 - \frac{1}{\dot{Z}_{12}}\bar{V}_2 - \frac{1}{\dot{Z}_{13}}\bar{V}_3 - \cdots - \frac{1}{\dot{Z}_{1n}}\bar{V}_n$$

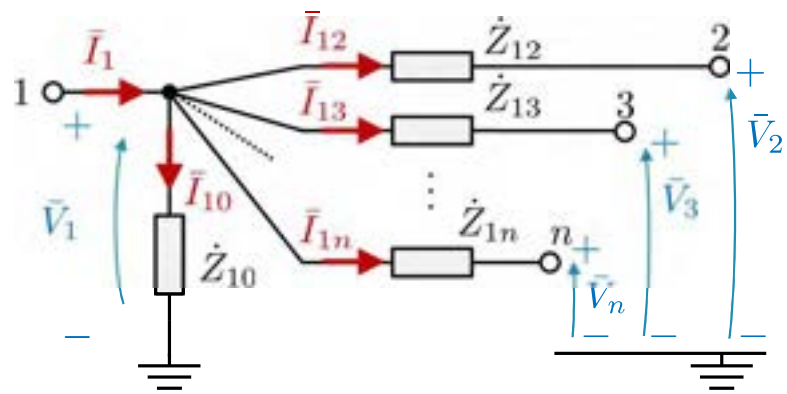

Nodal Currents from the Admittance Matrix Representation:

$$\bar{I}_1 = \dot{Y}_{11}\bar{V}_1 + \dot{Y}_{12}\bar{V}_2 + \dot{Y}_{13}\bar{V}_3 + \cdots + \dot{Y}_{1n}\bar{V}_n$$

ADMITTANCE MATRIX CALCULATION

How do we compute the admittance matrix coefficients?
We need to find a way to compute it fast, even for big scale networks

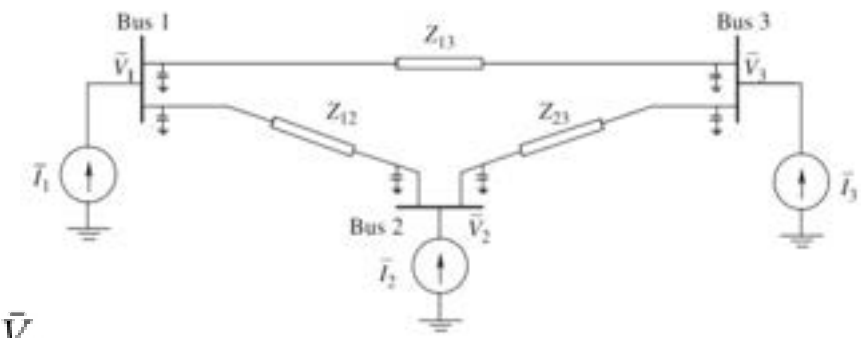

Nodal Currents from the Circuit representation:

$$\bar{I}_1 = \bar{I}_{10} + \bar{I}_{12} + \bar{I}_{13} + \ldots + \bar{I}_{1n}$$

$$= \underbrace{\left(\frac{1}{\dot{Z}_{10}} + \frac{1}{\dot{Z}_{12}} + \frac{1}{\dot{Z}_{13}} + \cdots + \frac{1}{\dot{Z}_{1n}}\right)}_{\dot{Y}_{11}} \bar{V}_1 - \underbrace{\frac{1}{\dot{Z}_{12}}}_{\dot{Y}_{12}} \bar{V}_2 - \underbrace{\frac{1}{\dot{Z}_{13}}}_{\dot{Y}_{13}} \bar{V}_3 - \cdots - \underbrace{\frac{1}{\dot{Z}_{1n}}}_{\dot{Y}_{1n}} \bar{V}_n$$

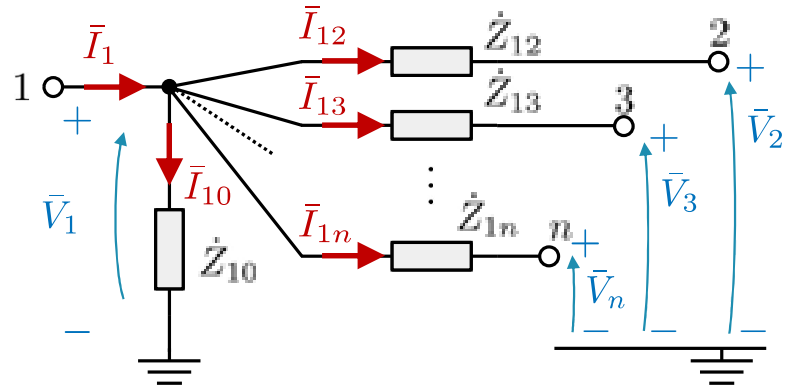

ADMITTANCE MATRIX CALCULATION

How do we compute the admittance matrix coefficients?
We need to find a way to compute it fast, even for big scale networks

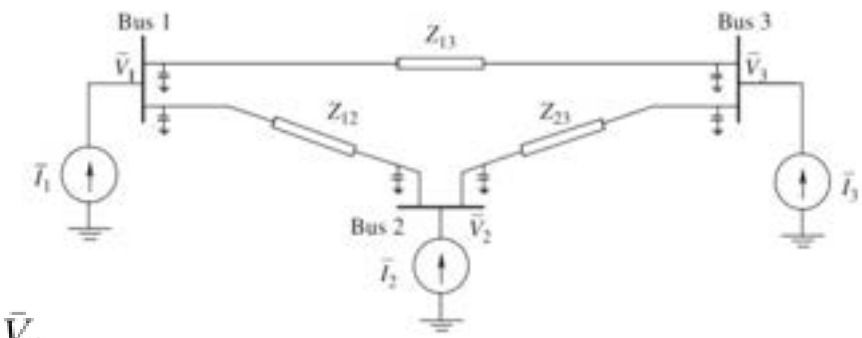

Nodal Currents from the Circuit representation:

$$\bar{I}_1 = \bar{I}_{10} + \bar{I}_{12} + \bar{I}_{13} + \ldots + \bar{I}_{1n}$$

$$= \left(\frac{1}{\dot{Z}_{10}} + \frac{1}{\dot{Z}_{12}} + \frac{1}{\dot{Z}_{13}} + \cdots + \frac{1}{\dot{Z}_{1n}}\right)\bar{V}_1 - \frac{1}{\dot{Z}_{12}}\bar{V}_2 - \frac{1}{\dot{Z}_{13}}\bar{V}_3 - \cdots - \frac{1}{\dot{Z}_{1n}}\bar{V}_n$$

$$= \underbrace{\left(\dot{Y}_{10}^{(z)} + \dot{Y}_{12}^{(z)} + \dot{Y}_{13}^{(z)} + \cdots + \dot{Y}_{1n}^{(z)}\right)}_{\dot{Y}_{11}}\bar{V}_1 - \underbrace{\dot{Y}_{12}^{(z)}}_{\dot{Y}_{12}}\bar{V}_2 - \underbrace{\dot{Y}_{13}^{(z)}}_{\dot{Y}_{13}}\bar{V}_3 - \cdots - \underbrace{\dot{Y}_{1n}^{(z)}}_{\dot{Y}_{1n}}\bar{V}_n$$

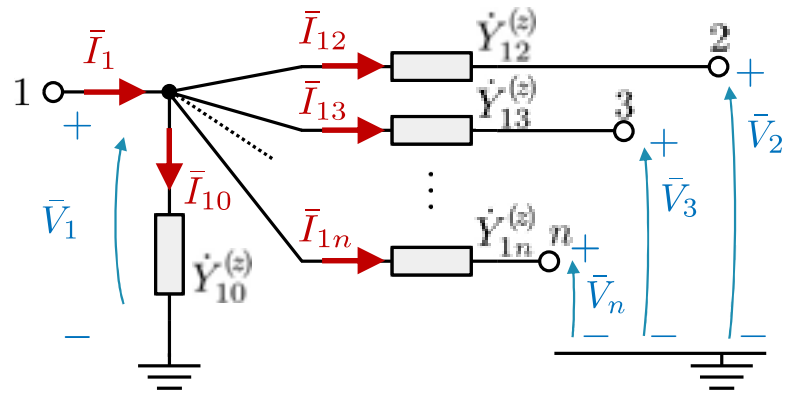

Do not confuse the subscripts
Network connection and admittance matrix index

Element (k,h) of the admittance matrix — $\dot{Y}_{kh} \neq \dot{Y}_{kh}^{(z)}$ — Physical Admittance between the nodes k and h

Admittance Matrix Calculation

How do we compute the admittance matrix coefficients?
We need to find a way to compute it fast, even for big scale networks

$$\underbrace{\begin{bmatrix} \bar{I}_1 \\ \bar{I}_2 \\ \vdots \\ \bar{I}_n \end{bmatrix}}_{\bar{\boldsymbol{I}}} = \underbrace{\begin{bmatrix} \dot{Y}_{11} & \dot{Y}_{12} & \cdots & \dot{Y}_{1n} \\ \dot{Y}_{21} & \dot{Y}_{22} & \cdots & \dot{Y}_{2n} \\ \vdots & \vdots & \ddots & \vdots \\ \dot{Y}_{n1} & \dot{Y}_{n2} & \cdots & \dot{Y}_{nn} \end{bmatrix}}_{\dot{\boldsymbol{Y}}} \cdot \underbrace{\begin{bmatrix} \bar{V}_1 \\ \bar{V}_2 \\ \vdots \\ \bar{V}_n \end{bmatrix}}_{\bar{\boldsymbol{V}}}$$

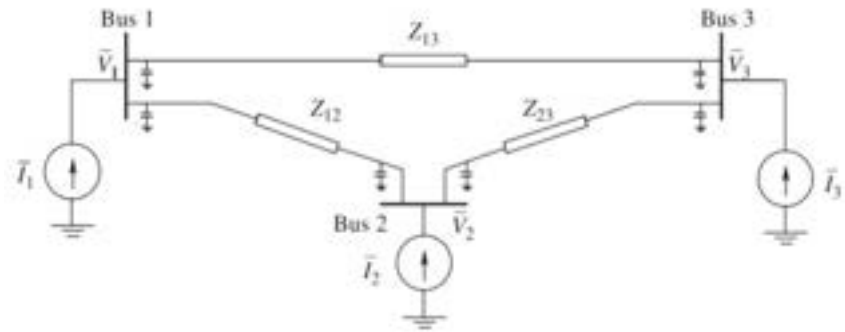

Diagonal terms $\dot{Y}_{kk} = \frac{1}{\dot{Z}_{k0}} + \sum_{\substack{h=1 \\ h \neq k}}^{n} \frac{1}{\dot{Z}_{kh}}$

Off-diagonal terms $\dot{Y}_{kh} = -\frac{1}{\dot{Z}_{kh}}$

Do not confuse the subscripts
Network connection and admittance matrix index

Easy to compute and update
Each line element only affects four admittance elements

Sparse matrix algebra (fast for large scale)
Most of the matrix elements are zero

Power Flow Problem Statement

How do we compute the admittance matrix coefficients?
We need to find a way to compute it fast, even for big scale networks

$$\underbrace{\begin{bmatrix} \bar{I}_1 \\ \bar{I}_2 \\ \vdots \\ \bar{I}_n \end{bmatrix}}_{\bar{\boldsymbol{I}}} = \underbrace{\begin{bmatrix} \dot{Y}_{11} & \dot{Y}_{12} & \cdots & \dot{Y}_{1n} \\ \dot{Y}_{21} & \dot{Y}_{22} & \cdots & \dot{Y}_{2n} \\ \vdots & \vdots & \ddots & \vdots \\ \dot{Y}_{n1} & \dot{Y}_{n2} & \cdots & \dot{Y}_{nn} \end{bmatrix}}_{\dot{\boldsymbol{Y}}} \cdot \underbrace{\begin{bmatrix} \bar{V}_1 \\ \bar{V}_2 \\ \vdots \\ \bar{V}_n \end{bmatrix}}_{\bar{\boldsymbol{V}}}$$

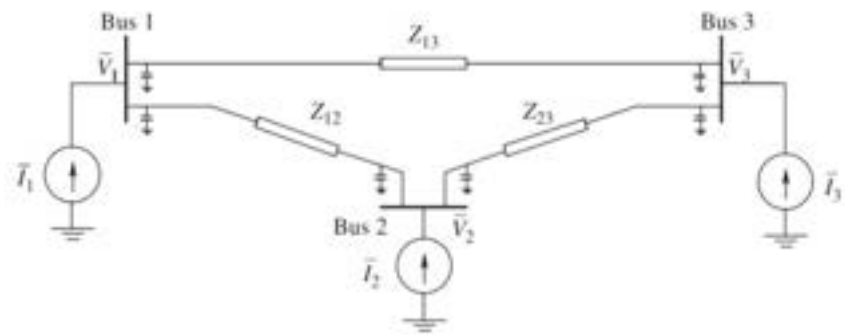

From the bus voltages, we can compute the currents
By simple matrix multiplication with the network admittance matrix

From voltages and currents, we can compute the powers
From the real and imaginary part of their phasor product

How do we compute the phasors of the voltages?
We need to consider what is imposed to the network

Power Flow Problem Statement

How do we compute the phasors of the voltages?
We need to consider what is imposed to the network

$$\left.\begin{aligned} \bar{V}_1 &= V_1 \angle\theta_1 \\ \bar{V}_2 &= V_2 \angle\theta_2 \\ \vdots \quad & \quad \vdots \\ \bar{V}_n &= V_n \angle\theta_n \end{aligned}\right\} \text{2n variables}$$

We need 2n equations to compute all the voltages
We need to know both their magnitudes and their phases

It is convenient to ungroup the bus nodes
According to what is known at their terminals

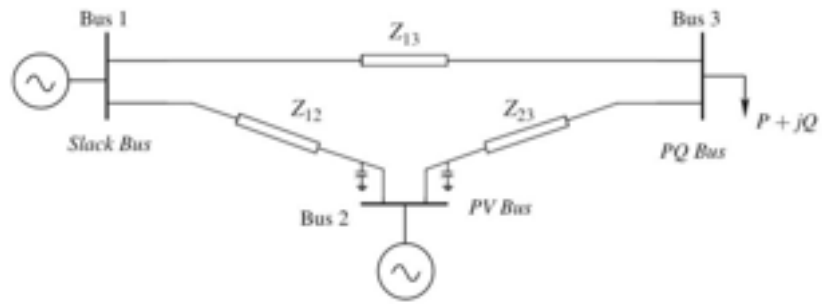

Total number of buses

Bus with known V and θ (slack bus)

$$n = n_{PQ} + n_{PV} + 1$$

Buses with known P and Q (loads and interconnections)

Buses with known P and V (sources)

Power Flow Problem Statement

How do we compute the phasors of the voltages?
We need to consider what is imposed to the network

$$\left.\begin{aligned} \bar{V}_1 &= V_1 \angle\theta_1 \\ \bar{V}_2 &= V_2 \angle\theta_2 \\ \vdots \quad & \quad \vdots \\ \bar{V}_n &= V_n \angle\theta_n \end{aligned}\right\} \text{2n variables}$$

We need 2n equations to compute all the voltages
We need to know both their magnitudes and their phases

In the slack bus we know voltage magnitude and phase
Typically, it is imposed that the magnitude is 1 p.u. and the phase is 0°

$$\left.\begin{aligned} V_1 &= 1\,\text{p.u.} \\ \theta_1 &= 0^\circ \end{aligned}\right\} \text{2 known values}$$

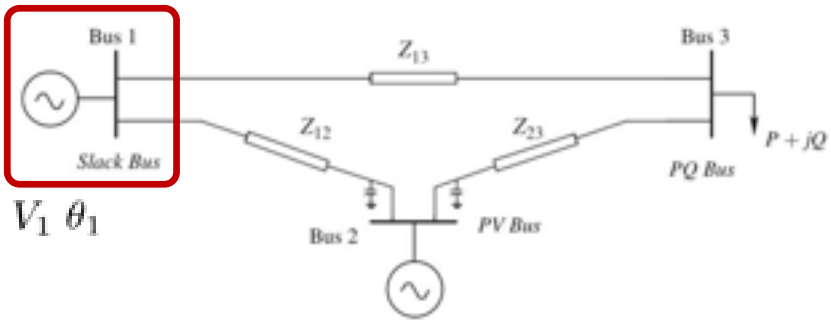

Total number of buses

Bus with known V and θ (slack bus)

$$n = n_{PQ} + n_{PV} + \boxed{1}$$

Buses with known P and Q (loads and interconnections)

Buses with known P and V (sources)

Power Flow Problem Statement

How do we compute the phasors of the voltages?
We need to consider what is imposed to the network

$$\left.\begin{array}{l} \bar{V}_1 = V_1 \angle\theta_1 \\ \bar{V}_2 = V_2 \angle\theta_2 \\ \vdots \qquad \vdots \\ \bar{V}_n = V_n \angle\theta_n \end{array}\right\} \text{2n variables} \qquad \left.\begin{array}{l} V_1 = 1\,\text{p.u.} \\ \theta_1 = 0^\circ \end{array}\right\} \text{2 known values}$$

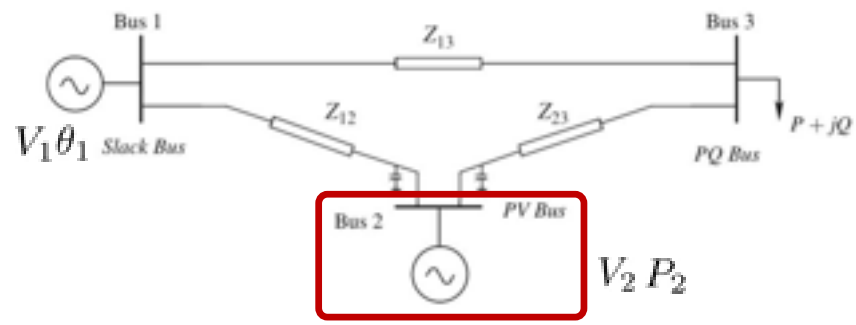

We need 2n equations to compute all the voltages
We need to know both their magnitudes and their phases

In the source buses we know voltage and active power
They can be controlled by the synchronous generators

$$\left.\begin{array}{l} V_k = V_k^{sp} \\ P_k = P_k^{sp} \end{array}\right. \begin{array}{l} \text{n_{PV} known values} \\ \text{n_{PV} equations} \end{array}$$

Total number of buses — Bus with known V and θ (slack bus)

$$n = n_{PQ} + \boxed{n_{PV}} + 1$$

Buses with known P and Q (loads and interconnections) — Buses with known P and V (sources)

Power Flow Problem Statement

How do we compute the phasors of the voltages?
We need to consider what is imposed to the network

$$\left.\begin{array}{l} \bar{V}_1 = V_1 \angle\theta_1 \\ \bar{V}_2 = V_2 \angle\theta_2 \\ \vdots \qquad \vdots \\ \bar{V}_n = V_n \angle\theta_n \end{array}\right\} \text{2n variables}$$

$$\left.\begin{array}{l} V_1 = 1\,\text{p.u.} \\ \theta_1 = 0^\circ \end{array}\right\} \text{2 known values}$$

$$\left.V_k = V_k^{sp}\right\} n_{PV} \text{ known values}$$

$$\left.P_k = P_k^{sp}\right\} n_{PV} \text{ equations}$$

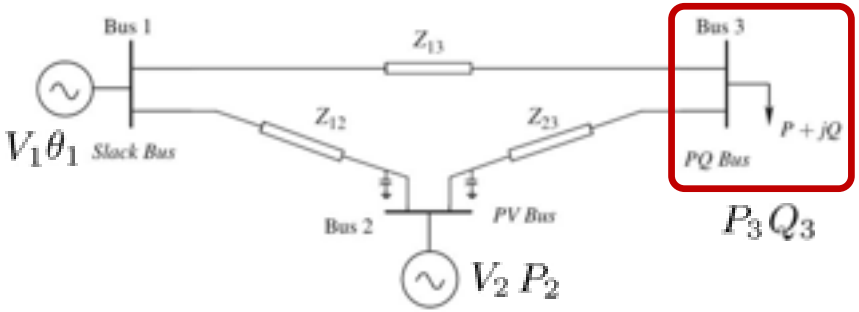

We need 2n equations to compute all the voltages
We need to know both their magnitudes and their phases

In the load buses we know active and reactive power
They are required by the load for correct functioning

$$\left.P_k = P_k^{sp}\right\} n_{PQ} \text{ equations}$$

$$\left.Q_k = Q_k^{sp}\right\} n_{PQ} \text{ equations}$$

Total number of buses

Bus with known V and θ (slack bus)

$$n = \boxed{n_{PQ}} + n_{PV} + 1$$

Buses with known P and Q (loads and interconnections)

Buses with known P and V (sources)

Power Flow Problem Statement

How do we compute the phasors of the voltages?
We need to consider what is imposed to the network

$$\left.\begin{array}{l} \bar{V}_1 = V_1 \angle\theta_1 \\ \bar{V}_2 = V_2 \angle\theta_2 \\ \vdots \qquad \vdots \\ \bar{V}_n = V_n \angle\theta_n \end{array}\right\} \text{2n variables}$$

$$\left.\begin{array}{l} V_1 = 1\,\text{p.u.} \\ \theta_1 = 0^\circ \end{array}\right\} \text{2 known values}$$

$$\left.V_k = V_k^{sp}\right\} n_{PV} \text{ known values}$$

$$\boxed{\begin{array}{ll} P_k = P_k^{sp} & n_{PV} \text{ equations} \\ P_k = P_k^{sp} & n_{PQ} \text{ equations} \\ Q_k = Q_k^{sp} & n_{PQ} \text{ equations} \end{array}}$$

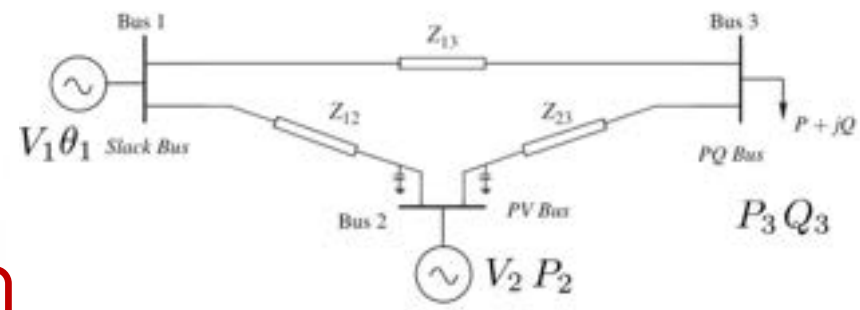

We obtained a system of 2n equations in 2n unknowns
We can solve this system to find the solution to the power flow

Only (n_{PV} + $2n_{PQ}$) equations to be solved
The known values are trivial and already solve their unknowns

Total number of buses

Bus with known V and θ (slack bus)

$$n = n_{PQ} + n_{PV} + 1$$

Buses with known P and Q (loads and interconnections)

Buses with known P and V (sources)

How do we formulate the power equations?
We need to express the powers only in terms of the voltages

Power Flow Problem Statement

How do we formulate the power equations?
We need to express the powers only in terms of the voltages

We should not have the currents in the expressions
We can compute the currents only after solving the power flow

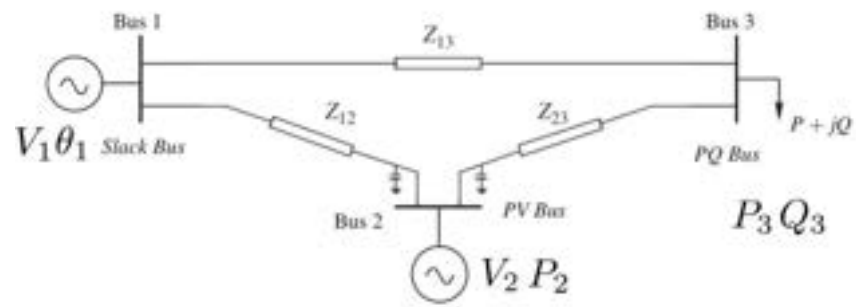

$$P_k = 3\,\mathrm{Re}\{\bar{V}_k \cdot \bar{I}_k^*\} = 3\,\mathrm{Re}\left\{\sum_{h=1}^{n} \dot{Y}_{kh}^* \cdot \bar{V}_k \cdot \bar{V}_h^*\right\}$$

$$Q_k = 3\,\mathrm{Im}\{\bar{V}_k \cdot \bar{I}_k^*\} = 3\,\mathrm{Im}\left\{\sum_{h=1}^{n} \dot{Y}_{kh}^* \cdot \bar{V}_k \cdot \bar{V}_h^*\right\}$$

$$\bar{I}_k = \dot{Y}_{k1}\bar{V}_1 + \dot{Y}_{k2}\bar{V}_2 + \dot{Y}_{k3}\bar{V}_3 + \cdots + \dot{Y}_{kn}\bar{V}_n = \sum_{h=1}^{n} \dot{Y}_{kh}\,\bar{V}_h$$

$$\underbrace{\begin{bmatrix} \bar{I}_1 \\ \bar{I}_2 \\ \vdots \\ \bar{I}_n \end{bmatrix}}_{\bar{\boldsymbol{I}}} = \underbrace{\begin{bmatrix} \dot{Y}_{11} & \dot{Y}_{12} & \cdots & \dot{Y}_{1n} \\ \dot{Y}_{21} & \dot{Y}_{22} & \cdots & \dot{Y}_{2n} \\ \vdots & \vdots & \ddots & \vdots \\ \dot{Y}_{n1} & \dot{Y}_{n2} & \cdots & \dot{Y}_{nn} \end{bmatrix}}_{\dot{\boldsymbol{Y}}} \cdot \underbrace{\begin{bmatrix} \bar{V}_1 \\ \bar{V}_2 \\ \vdots \\ \bar{V}_n \end{bmatrix}}_{\bar{\boldsymbol{V}}}$$

Power Flow Problem Statement

How do we formulate the power equations?
We need to express the powers only in terms of the voltages

We should express in terms of magnitude and phases
They are the variables that we use for the power flow resolution

$$P_k = 3\,\mathrm{Re}\left\{ \sum_{h=1}^{n} \dot{Y}_{kh}^{*} \cdot \bar{V}_k \cdot \bar{V}_h^{*} \right\} = 3\,\mathrm{Re}\left\{ \sum_{h=1}^{n} (G_{kh} - \mathrm{j}B_{kh})(V_k \cdot V_h)\, e^{\mathrm{j}(\theta_k - \theta_h)} \right\}$$

$$Q_k = 3\,\mathrm{Im}\left\{ \sum_{h=1}^{n} \dot{Y}_{kh}^{*} \cdot \bar{V}_k \cdot \bar{V}_h^{*} \right\} = 3\,\mathrm{Im}\left\{ \sum_{h=1}^{n} (G_{kh} - \mathrm{j}B_{kh})(V_k \cdot V_h)\, e^{\mathrm{j}(\theta_k - \theta_h)} \right\}$$

$$\dot{Y}_{kh} = G_{kh} + \mathrm{j}B_{kh}$$

Power Flow Problem Statement

How do we formulate the power equations?
We need to express the powers only in terms of the voltages

$$P_k = 3\,\mathrm{Re}\left\{ \sum_{h=1}^{n} (G_{kh} - \mathrm{j}B_{kh})(V_k \cdot V_h)\, \mathrm{e}^{\mathrm{j}(\theta_k - \theta_h)} \right\}$$

$$Q_k = 3\,\mathrm{Im}\left\{ \sum_{h=1}^{n} (G_{kh} - \mathrm{j}B_{kh})(V_k \cdot V_h)\, \mathrm{e}^{\mathrm{j}(\theta_k - \theta_h)} \right\}$$

Power Flow Problem Statement

How do we formulate the power equations?
We need to express the powers only in terms of the voltages

$$P_k = 3\,\mathrm{Re}\left\{ \sum_{h=1}^{n} (G_{kh} - \mathrm{j}B_{kh})(V_k \cdot V_h)\, \mathrm{e}^{\mathrm{j}\theta_{kh}} \right\}$$

$$Q_k = 3\,\mathrm{Im}\left\{ \sum_{h=1}^{n} (G_{kh} - \mathrm{j}B_{kh})(V_k \cdot V_h)\, \mathrm{e}^{\mathrm{j}\theta_{kh}} \right\}$$

$$\theta_{kh} = \theta_k - \theta_h$$

Power Flow Problem Statement

How do we formulate the power equations?
We need to express the powers only in terms of the voltages

$$P_k = 3\,\mathrm{Re}\left\{ \sum_{h=1}^{n} (G_{kh} - \mathrm{j}B_{kh})(V_k \cdot V_h)\left(\cos\theta_{kh} + \mathrm{j}\sin\theta_{kh}\right) \right\}$$

$$Q_k = 3\,\mathrm{Im}\left\{ \sum_{h=1}^{n} (G_{kh} - \mathrm{j}B_{kh})(V_k \cdot V_h)\left(\cos\theta_{kh} + \mathrm{j}\sin\theta_{kh}\right) \right\}$$

$$\theta_{kh} = \theta_k - \theta_h$$

Power Flow Problem Statement

How do we formulate the power equations?
We need to express the powers only in terms of the voltages

$$P_k = 3\sum_{h=1}^{n}(V_k \cdot V_h)\,\mathrm{Re}\left\{(G_{kh} - \mathrm{j}B_{kh})\left(\cos\theta_{kh} + \mathrm{j}\sin\theta_{kh}\right)\right\}$$

$$Q_k = 3\sum_{h=1}^{n}(V_k \cdot V_h)\,\mathrm{Im}\left\{(G_{kh} - \mathrm{j}B_{kh})\left(\cos\theta_{kh} + \mathrm{j}\sin\theta_{kh}\right)\right\}$$

$$\theta_{kh} = \theta_k - \theta_h$$

Power Flow Problem Statement

How do we formulate the power equations?
We need to express the powers only in terms of the voltages

$$P_k = 3\sum_{h=1}^{n}(V_k \cdot V_h)\left(G_{kh}\cos\theta_{kh} + B_{kh}\sin\theta_{kh}\right)$$

$$Q_k = 3\sum_{h=1}^{n}(V_k \cdot V_h)\left(G_{kh}\sin\theta_{kh} - B_{kh}\cos\theta_{kh}\right)$$

$$\theta_{kh} = \theta_k - \theta_h$$

Power Flow Problem Statement

How do we formulate the power equations?
We need to express the powers only in terms of the voltages

We have analytical expressions of the bus powers
They are functions of magnitude and phases of the bus voltages

$$P_k = 3\sum_{h=1}^{n}(V_k \cdot V_h)\big(G_{kh}\cos(\theta_k - \theta_h) + B_{kh}\sin(\theta_k - \theta_h)\big) = f_{P_k}(\underbrace{\theta_1, \theta_2, \ldots, \theta_n}_{\boldsymbol{\theta}}, \underbrace{V_1, V_2, \ldots, V_n}_{\boldsymbol{V}})$$

$$Q_k = 3\sum_{h=1}^{n}(V_k \cdot V_h)\big(G_{kh}\sin(\theta_k - \theta_h) - B_{kh}\cos(\theta_k - \theta_h)\big) = f_{Q_k}(\theta_1, \theta_2, \ldots, \theta_n, V_1, V_2, \ldots, V_n)$$

Power Flow Problem Statement

How do we formulate the power equations?
We need to express the powers only in terms of the voltages

We have analytical expressions of the bus powers
They are functions of magnitude and phases of the bus voltages

$$\begin{cases} P_k = 3\sum_{h=1}^{n}(V_k \cdot V_h)\big(G_{kh}\cos(\theta_k-\theta_h)+B_{kh}\sin(\theta_k-\theta_h)\big) = f_{P_k}(\boldsymbol{\theta},\boldsymbol{V}) = P_k^{sp} \\ Q_k = 3\sum_{h=1}^{n}(V_k \cdot V_h)\big(G_{kh}\sin(\theta_k-\theta_h)-B_{kh}\cos(\theta_k-\theta_h)\big) = f_{Q_k}(\boldsymbol{\theta},\boldsymbol{V}) = Q_k^{sp} \end{cases}$$

For all the PV and PQ buses
$n_{PV}+n_{PQ}$ equations

For all the PQ buses
n_{PQ} equations

This system of equations is non-linear
Product of voltage magnitudes and trigonometric functions

There is no analytical solution available
It is impossible to find an explicit formula to solve the power flow

The power flow problem needs to be solved numerically
Iterative methods can be used to find an approximate solution

Numerical methods– Examples

Gauss–Seidel Method

Simple
Easy to implement

Slow
Product of voltage magnitudes and trigonometric functions

$$V_i^{k+1} = \frac{1}{Y_{ii}}\left(\frac{P_i - jQ_i}{V_i^{*k}} - \sum_{j \neq i} Y_{ij} V_j\right)$$

Newton–Raphson Method (Most used)

Very fast convergence and Accurate
Standard in tools like MATPOWER, PSSE, DIgSILENT

Slow
Linearizes the nonlinear equations using Jacobian matrix

$$\begin{bmatrix} \Delta P \\ \Delta Q \end{bmatrix} = J \begin{bmatrix} \Delta\theta \\ \Delta \mid V \mid \end{bmatrix} \qquad J = \begin{bmatrix} \frac{\partial P}{\partial \theta} & \frac{\partial P}{\partial V} \\ \frac{\partial Q}{\partial \theta} & \frac{\partial Q}{\partial V} \end{bmatrix}$$

Fast Decoupled Load Flow

Very fast for large networks
Simplified Jacobian

Less accurate under heavy loading
P mainly depends on angles
Q mainly depends on the voltage magnitude

$$\begin{bmatrix} \Delta P \\ \Delta Q \end{bmatrix} = J \begin{bmatrix} \Delta\theta \\ \Delta \mid V \mid \end{bmatrix} \qquad J = \begin{bmatrix} \frac{\partial P}{\partial \theta} & \cancel{\frac{\partial P}{\partial V}} \\ \cancel{\frac{\partial Q}{\partial \theta}} & \frac{\partial Q}{\partial V} \end{bmatrix}$$

SUMMARY
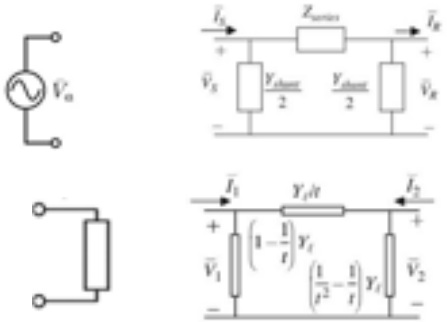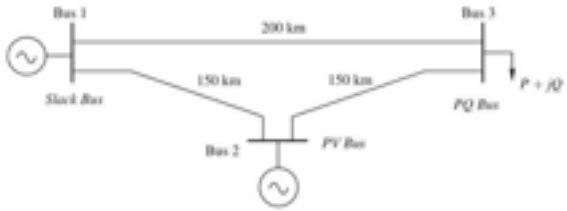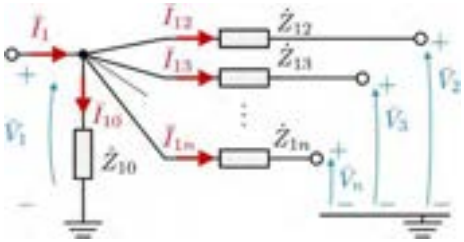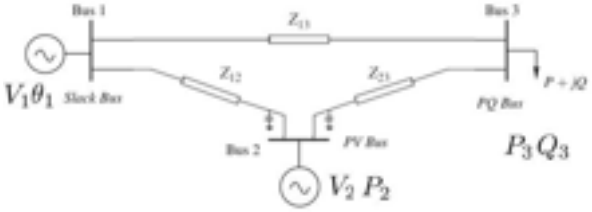
- Role of the Power Flow Analysis
- Model of the Power System Elements
- Network Representation
- Network Admittance Matrix Calculation
- Effect of the constraints on the Network Buses
- Power Flow Problem Statement
- Numerical Methods/ Examples