Lecture 5: Fairness in power distribution

Dr. Md Umar Hashmi
KU Leuven & EnergyVille, Belgium

Joint work with Pedro Carvalho, Zijie Liu, Olivia Rubbers

Agenda

- Fairness metrics, definitions
- Power system literature overview
- Real world application 1: PV curtailment
- Real world application 2: DG hosting capacity

Introduction to Fairness

- How **benefits** and **burdens** are distributed among individuals/groups:
  - Who gets what? Is that distribution justifiable?
- Decisions are traditionally made to **maximise total efficiency**;
  - Maximising total benefit does not necessarily mean fair outcomes.
- The **Price of Fairness** concept:
  - Improving fairness may reduce total efficiency.
- Limited resources and physical constraints create structural disparities;
  - Fairness ensures social cohesion, transparency, regulatory compliance and long-term system legitimacy.

Motivation for Fairness in Distribution Networks

- Increasing DER (e.g. PVs, EVs) integration creates allocation challenges (bidirectional flows), amplifying disparities.
- Locational disparities need to be counter balanced.

Regulators call on the new European Parliament, Commission and Council to focus on key electricity and infrastructure challenges to deliver a decarbonised, consumer-centric and competitive electricity system in 2030 and beyond

CEER
Council of European Energy Regulators

7 AFFORDABLE AND CLEAN ENERGY

11 SUSTAINABLE CITIES AND COMMUNITIES

European Commission

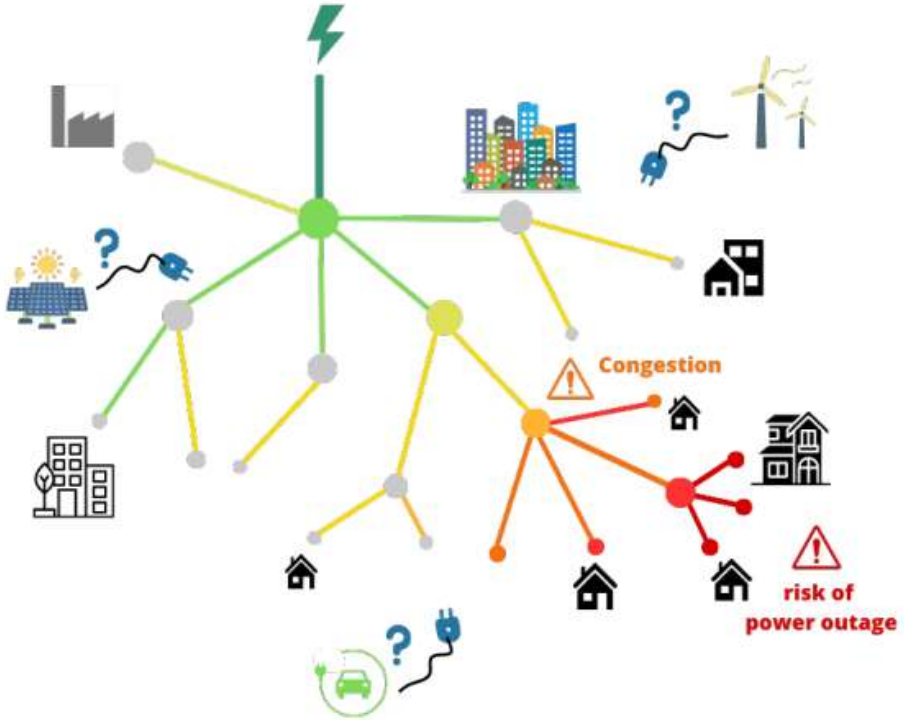

"70% of RE capacity connected at distribution level by 2030"

eurelectric powering people

Eurelectric (2024). *Distribution Grids Handbook*.

Stakeholders in Fair Distribution Networks

- Consumers (C)
  - Passive users, Prosumers (EVs, PVs, batteries): affected by curtailment and tariffs
- Distribution System Operators (D)
  - Ensure technical limits, manage congestion, design control signals.
- Aggregators (A)
  - Bundle distributed energy resources (DERs), coordinate flexibility.
- Regulators (R)
  - Define tariff structures, set acceptable fairness levels, balance cost recovery and equity

Different Fairness Notions

- Utilitarian (U)
  - Maximise total welfare, represents efficiency baseline, unfair under locational disparity.
- Egalitarian (E)
  - As-equal-as-possible allocation to all, e.g. same Hosting Capacity or curtailment share.
- Proportional (P)
  - Allocation proportional to capacity or demand, e.g. proportional burden sharing.
- Meritocratic (M)
  - Reward based on user contributions, often uses Shapley Value (game theory concept)
- Bargaining (B) and Threshold (T)
  - Explicit fairness-efficiency trade-off, adjustable weighting or switching rules at a set point.

Applications in DN Literature

Application	Congestion Management (CM)	Hosting Capacity (HC)	Local Energy Systems (LES)	Voltage Regulation (VR)
Dominant Fairness Notions	B, E, P, T	B, E, P, T	B, E, M, P, T	E, P, T
Stakeholders Involved	A, C, D	C, D, R	A, C, D	A, C, D, R

- Notions → E: Egalitarian, P: Proportional, B: Bargaining, M: Meritocratic, T: Threshold.
- Stakeholders → C: Consumers, D: DSO, A: Aggregator, R: Regulator.

Locational Disparity

- Grid topology creates inequality:
  - Nodes farther from substations incur in
    - More voltage issues
    - More curtailment
    - Lower Hosting Capacity
- Example metrics:
  - Loss of Consumer Gain (LCG)
  - Net Benefit Index (NBI)
  - PV Harvesting Index (PHI)

The Price of Fairness (PoF)

- $\mathrm{PoF} = \frac{U-F}{U}$
  - where U = Utilitarian solution and F = fairness-aware solution.
- Fairness requires sacrificing some efficiency
  - PoF quantifies this sacrifice, making it more transparent, explicit.
- Important to the stakeholders as:
  - Regulators define the acceptable PoF
  - DSOs often incur the cost.
  - Some consumers are partially affected.

Inequality metrics

- Rawslian maximin
- Leximax criteria
- Alpha fairness (*convex*)
- Proportional fairness or Nash Bargaining solution (*convex*)
- Kalai-Sorodinsky bargaining solution
- Fairness threshold criteria combining utilitarianism with maximin & leximax criteria

- Gini index
  - Area between Lorenz curve and perfect equality line
- Jain index
  - Strictly monotone function of the coefficient of variation

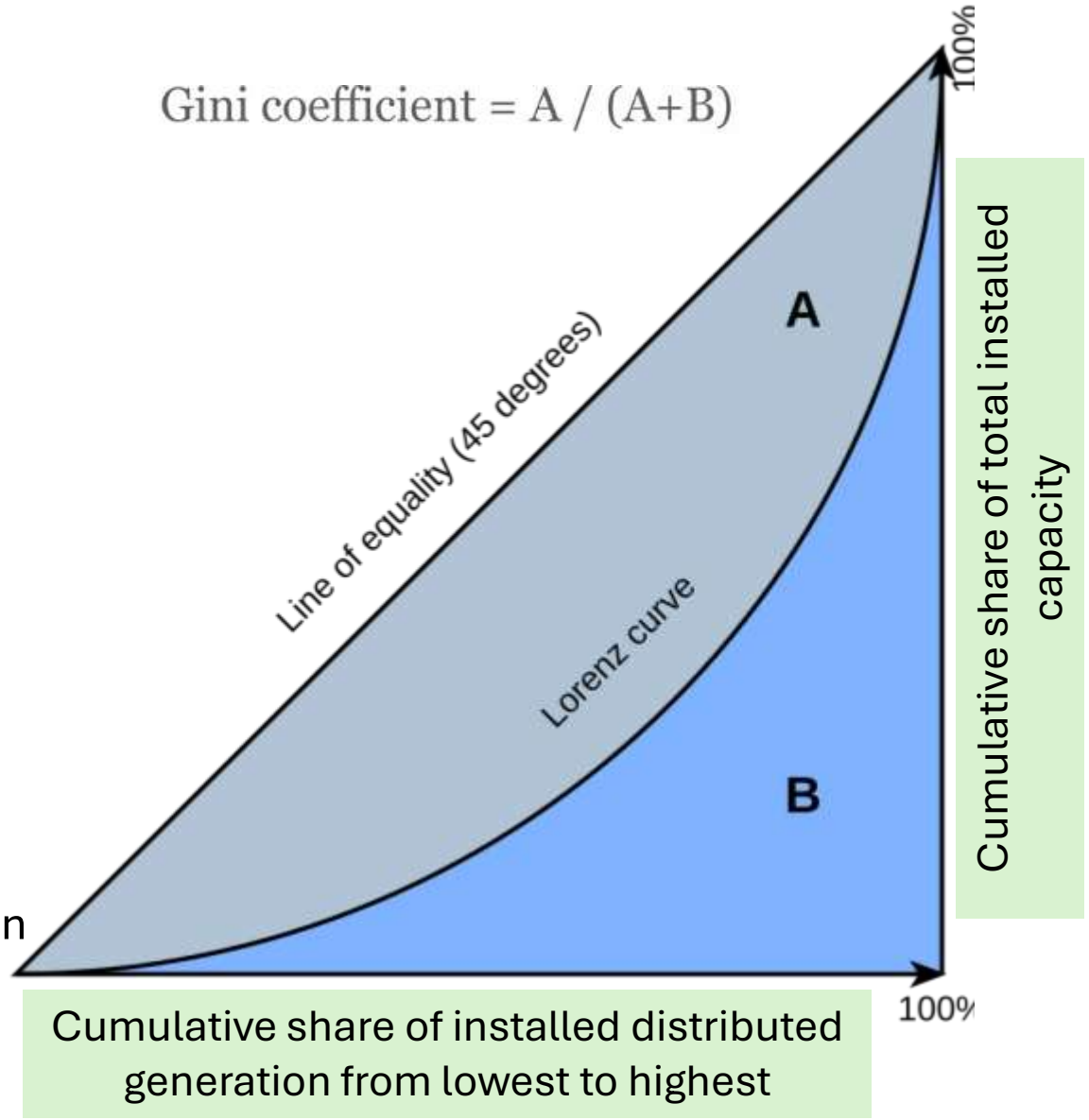

Fairness Metrics Overview

- Several are convex (ideal)
- Others are non-linear but linearizable
- Some require MILP (integer variables)

- α-fairness: concave, globally solvable
- Jain Index: non-linear
  - Can be reformulated into convex objective function

Metric	Formula	Range	Fair Value
Epsilon-fairness (ε)	$(1-\varepsilon+\varepsilon\sqrt{N})\lVert\mathbf{p}\rVert_2 \leq \lVert\mathbf{p}\rVert_1$	$[0,1]$	1
Jain's Index (J)	$\frac{(\sum_i^N u_i)^2}{N\sum_i^N u_i^2}$	$[0,1]$	1
Min-Max Ratio (MiM)	$\frac{\min_i u_i}{\max_i u_i}$	$[0,1]$	1
McLoone Index (M_L)	$\frac{1}{\lvert I(u)\rvert\overline{u}}\sum_{i\in I(u)}^N u_i$	$[0,1]$	1
Gini coefficient (G)	$\frac{1}{2\overline{u}N^2}\sum_{i,j}^N \lvert u_i-u_j\rvert$	$[0,1]$	0
Hoover Index (H)	$\frac{1}{2N\overline{u}}\sum_i^N \lvert u_i-\overline{u}\rvert$	$[0,1]$	0
F Fairness Index (F)	$\sum_{i=1}^N \left\lvert \frac{B_i}{\sum_{i=1}^N B_i} - \frac{S_i^*}{\sum_{i=1}^N S_i^*}\right\rvert$	$[0,+\infty)$	0
Meritocratic Index (MI)	$\sqrt{\frac{1}{N}\sum_i^N (u_i-\hat{u}_i)^2}$	$[0,+\infty)$	0
Alpha-fairness (α)	$\begin{cases}\frac{1}{1-\alpha}\sum_i^N u_i^{\alpha-1} & \text{for } \alpha\neq 1\\ \sum_i^N \log(u_i) & \text{for } \alpha = 1\end{cases}$	$[0,+\infty)$	*
Social Welfare (u)	$\sum_{i=1}^N u_i$	$[0,+\infty)$	**

Why fairness and what next?

- Current Situation:
  - No unified fairness definition in DN literature
  - Metrics are chosen inconsistently
  - PoF is often not explicitly quantified
  - Stakeholder representation varies

- Fairness in DN must be explicit, quantified, and transparent:
  - Fairness notions are based on the intended ethical perspective
  - Metrics translate these notions into numbers
  - Stakeholders are affected by the chosen fairness notion
  - The PoF quantifies the efficiency sacrifice of implementing a fair approach
  - Locational disparity is the structural driver of the problem

Real world example 1:
PV curtailment

Need for fair energy curtailment

- Nodes closer to the MV/LV substation witness a much smaller voltage fluctuation compared to nodes at the end of the DN feeder

- For Volt-Watt denoted as P(U): node 4 undergoes much higher load and generation curtailment compared to node 2

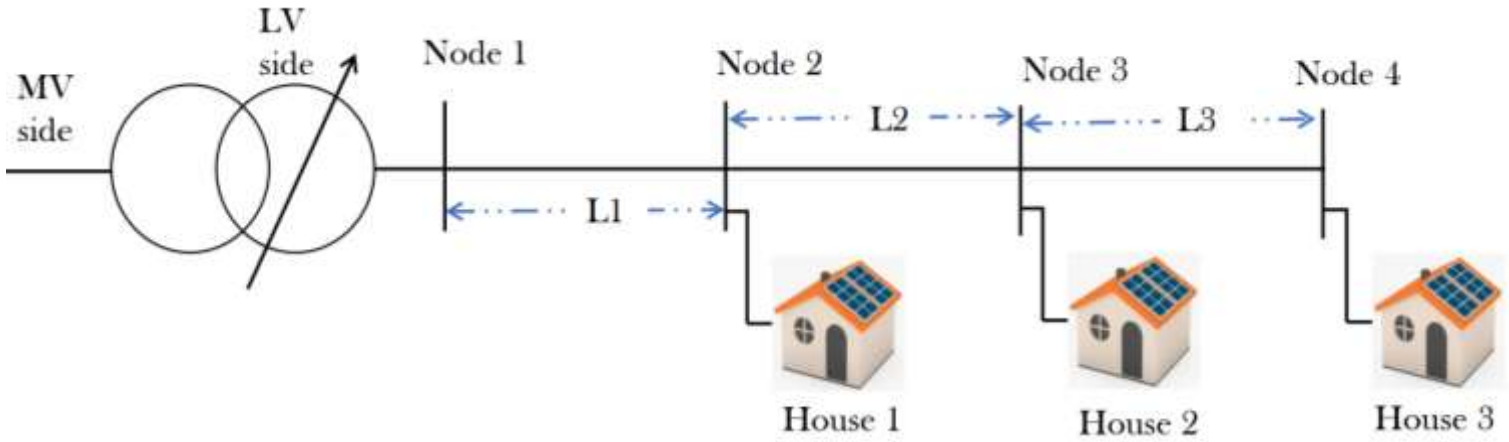

- For Volt-Var denoted as Q(U): node 4 undergoes much higher reactive power injected or absorbed compared to node 2

PV generation curtailment

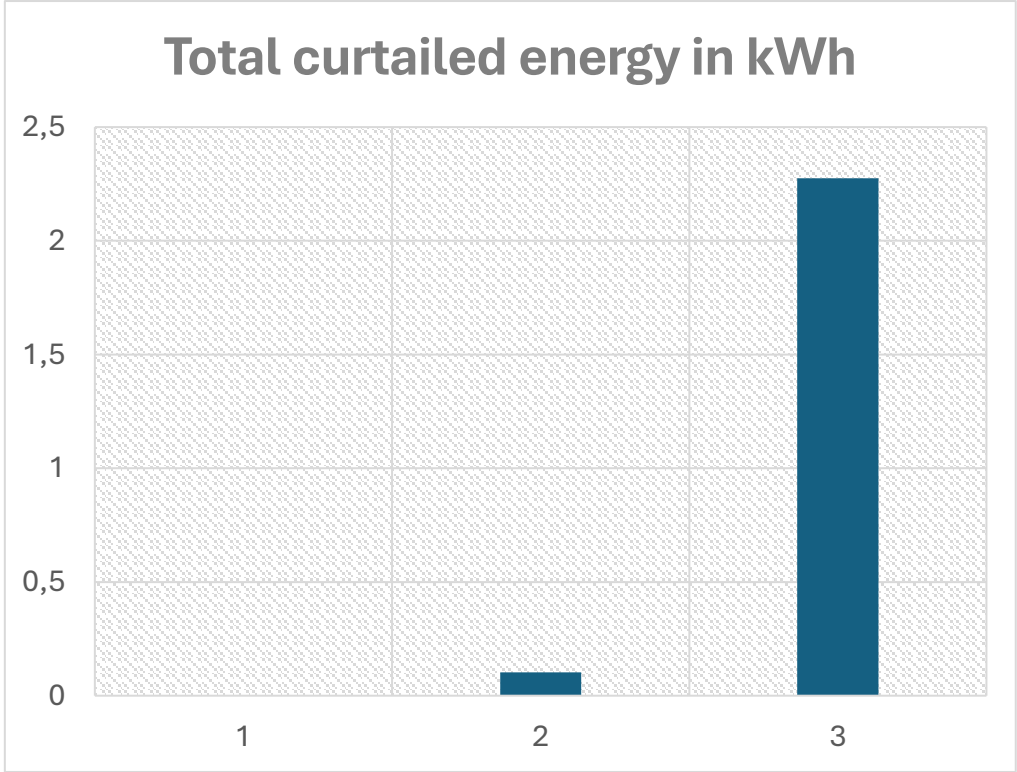

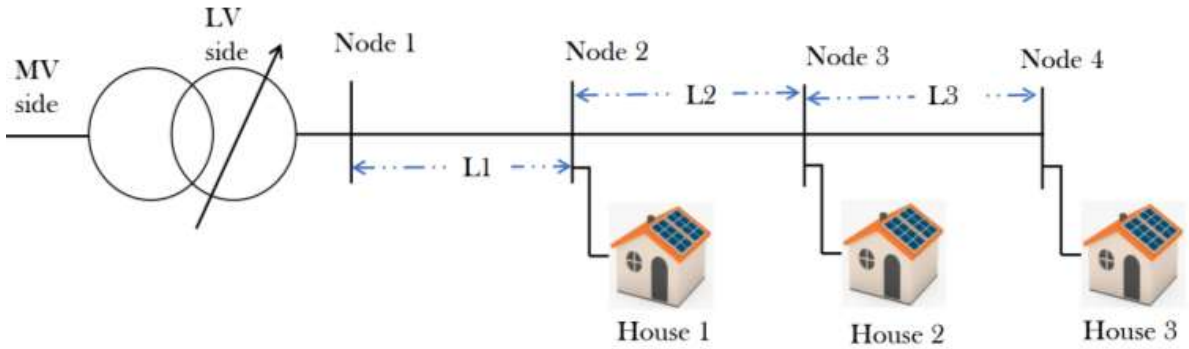

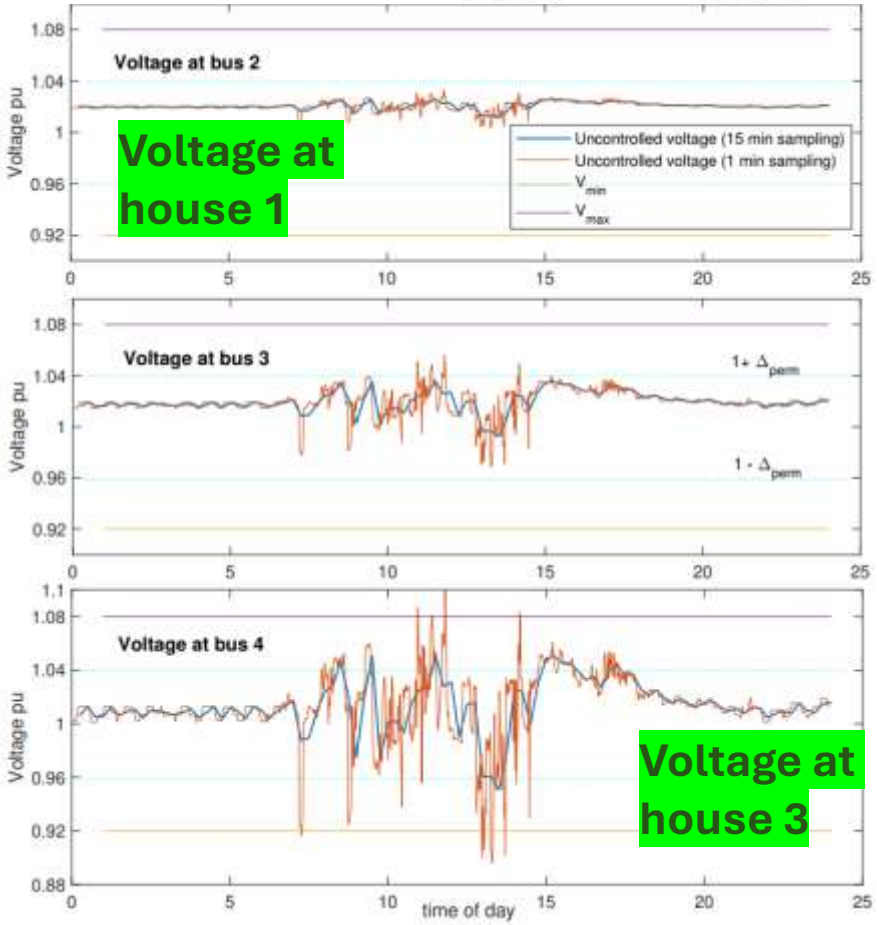

Opportunity for energy arbitrage

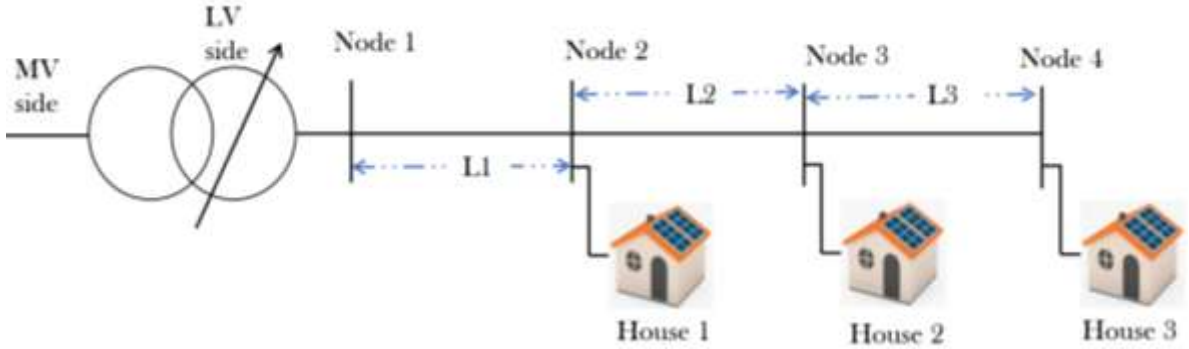

- Energy cost depends on the fixed and variable components of electricity tariff

- For three identical consumers connected in three different locations of the network. These consumers have
  - Same electrical inelastic load
  - Same amount of load flexibility and
  - Same PV + Battery interfaced by an inverter of the same size.

- For this case, under P(U) and Q(U) control of voltage, Prosumer at node 4 pays 43% higher variable cost compared to prosumer at node 2.

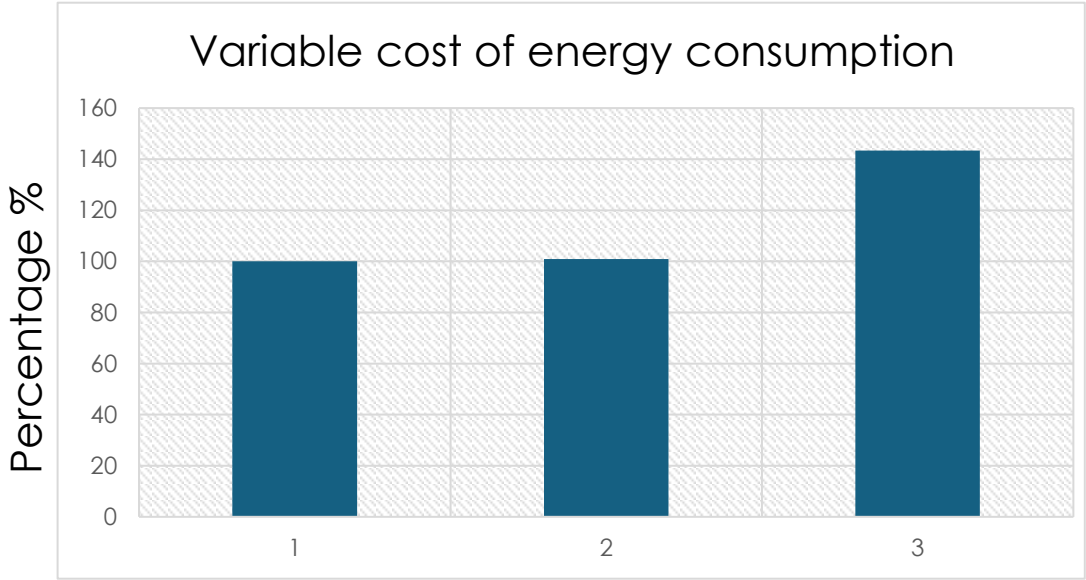

Real world example 1: Distribution network hosting capacity

Hosting capacity contemporary definitions

- *EPRI definition*: Hosting capacity is defined as the amount of PV that can be accommodated <u>without impacting power quality or reliability</u> under existing control and infrastructure configurations

- Rule of thumb-based HC estimates:
  - HC as a Percentage of Peak Load and/or minimum demand
    - DG HC based on customer demand are 15% of the peak demand and/or 100% of the minimum demand [Ref 1]
  - Per-Transformer Limit (kW/kVA of Transformer)
  - Inverter sizing rule: In Germany, inverter sizing for PV systems is shaped by the "*70% rule,*" limiting maximum feed-in power to 70% of the installed capacity.
  - However, such estimates are more difficult to design for DERs that increase the load on the feeder/network such as EVs, HPs etc.

Ref 1. Lindl, Tim, Kevin Fox, Abraham Ellis, and Robert Broderick. "Integrated distribution planning concept paper: A proactive approach for accommodating high penetrations of distributed generation resources." *Interstate Renewable Energy Council* (2013).

The Problem: Unequal Access to the Grid

- **Context:** Integrating Distributed Generation (DG) like rooftop solar is essential for the energy transition → Reducing connection request processing by performing **Hosting Capacity (HC)**.
- **The Fairness Issue:** A user's location on a feeder inherently determines their access to this limited capacity. Customers at the end of a long line often have much less opportunity to install DG than those near the substation.
- Challenge: Notions of fairness will vary with considered stakeholders.
- **Research Gap:** Most studies use a single, vague definition of fairness without systematically analyzing the **trade-off between maximizing total DG (efficiency) and ensuring equitable access (fairness)**.

Formulating Fairness objectives and metric for HCA

Hosting capacity depends on which prosumer can add PV and how much PV

→Fairness defines how the capacity will be divided

John Rawls (1921—2002) – One of the important thinkers on Distributive justice and fairness

Different objectives:

→ Utilitarian: $HC = \max \sum_{i=1}^{N} P_{DER}^{i}$

→Maximizing total HC for society

Bounded: $HC = max \sum_{i=1}^{N} P_{DER}^{i}$

$with\ P_{DER}^{i} \in [P_{min}, P_{max}]$

→ DG bounds proportional to the peak load

→ Egalitarianism: Same DG for each prosumer

Egalitarian: $HC = \max(N * P_{DER})$

Metrics to use:

Efficiency metric:

- Price of fairness: POF = $\frac{HC^{utilitarian}}{HC^{fair}}$

Inequality metrics:

- Largest disparity: $\max P_{DER} - minP_{DER}$
- Gini coefficient: $G(\boldsymbol{u}) = \frac{1}{2\bar{u}n^2} \sum_{i,j} |u_i - u_j|$

How We Measure Fairness and Efficiency

We use two Key Performance Indicators (KPIs) to evaluate each solution:

- **Price of Fairness (PoF):** Measures the loss in efficiency.
  - "How much total Hosting Capacity do we sacrifice to achieve a fairer distribution?"
  - **Goal: Low PoF** (closer to 0).

$$POF = \frac{HC_{uti} - HC_{fair}}{HC_{uti}}$$

- **Gini Coefficient:** Measures the level of inequality.
  - standard metric from economics to measure distribution inequality.
    - 0 = Perfect equality (everyone gets the same).
    - 1 = Maximum inequality (one person gets everything).
  - **Goal: Low Gini Coefficient** (closer to 0).

$$G = \frac{1}{2\bar{P}_{DG}n^2} \sum_{i,j} |P_{DG,i} - P_{DG,j}|$$

The Ideal Solution: Low PoF and a Low Gini score.

Case Study: Four Real-World LV Feeders

We applied our framework to four representative low-voltage feeders from a UK dataset, chosen to cover a range of sizes and topologies.

- **RF1:** Small
- **RF2:** Large, complex branching
- **RF3:** Medium, linear (less branching)
- **RF4:** Medium, high branching

id	RF1	RF2	RF3	RF4
feeder length (km)	0.164	5.206	1.013	0.735
feeder resistance (Ω)	0.219	4.617	0.907	0.376
feeder reactance (Ω)	0.014	0.416	0.081	0.055
R/X	14.100	10.479	12.971	12.286
impedance (Ω)	0.22	4.64	0.91	0.38
number of loads	4	175	30	23
number of buses	12	359	65	52
area (m^2)	1280.1	67695.6	10291.7	14434.7

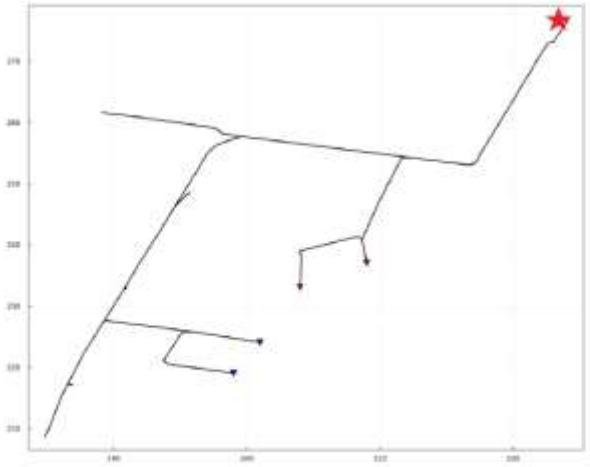

(a) Network 5 Feeder 1: RF1

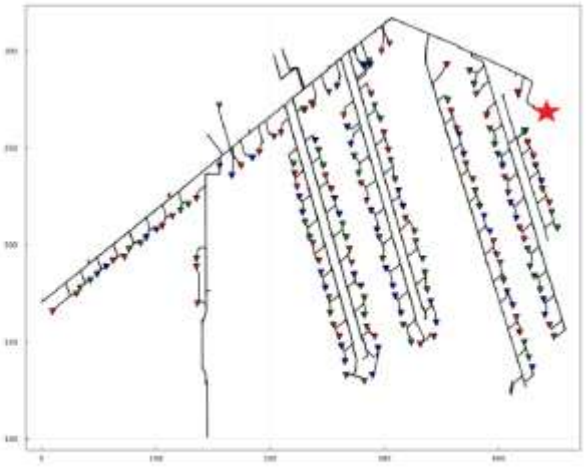

(b) Network 2 Feeder 1: RF2

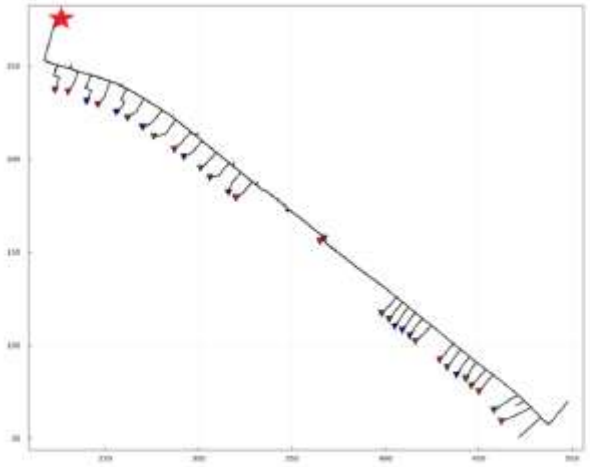

(c) Network 5 Feeder 4: RF3

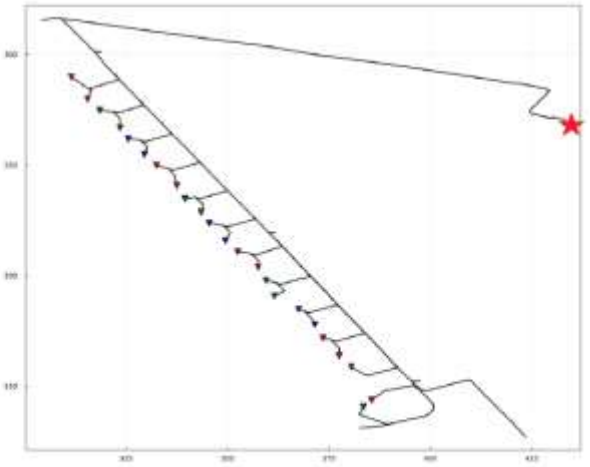

(d) Network 2 Feeder 5: RF4

Case study: Fairness Definition Impact comparison

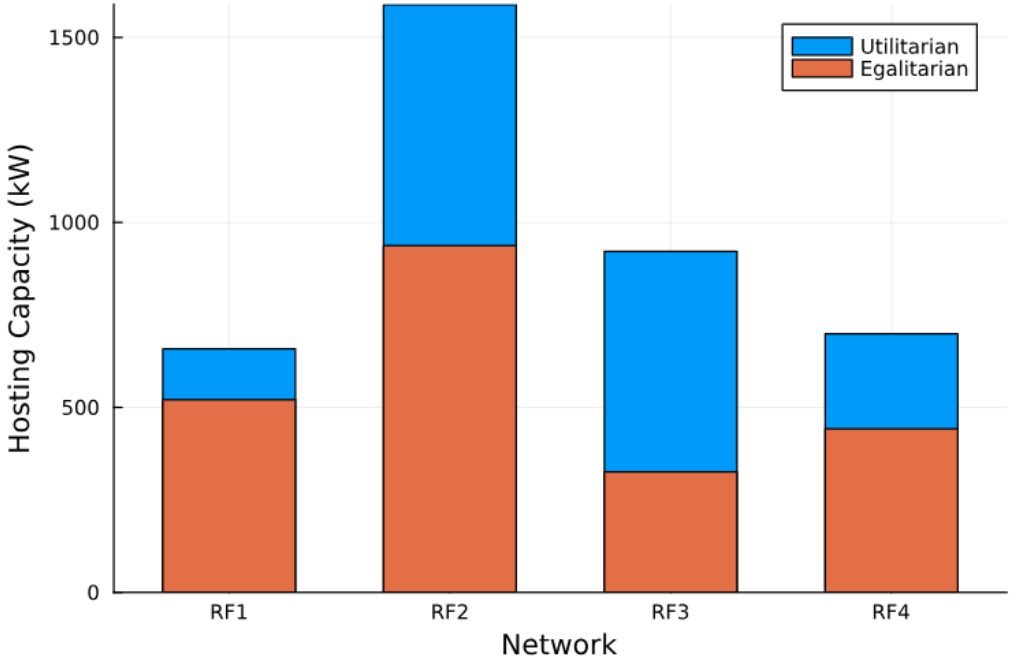

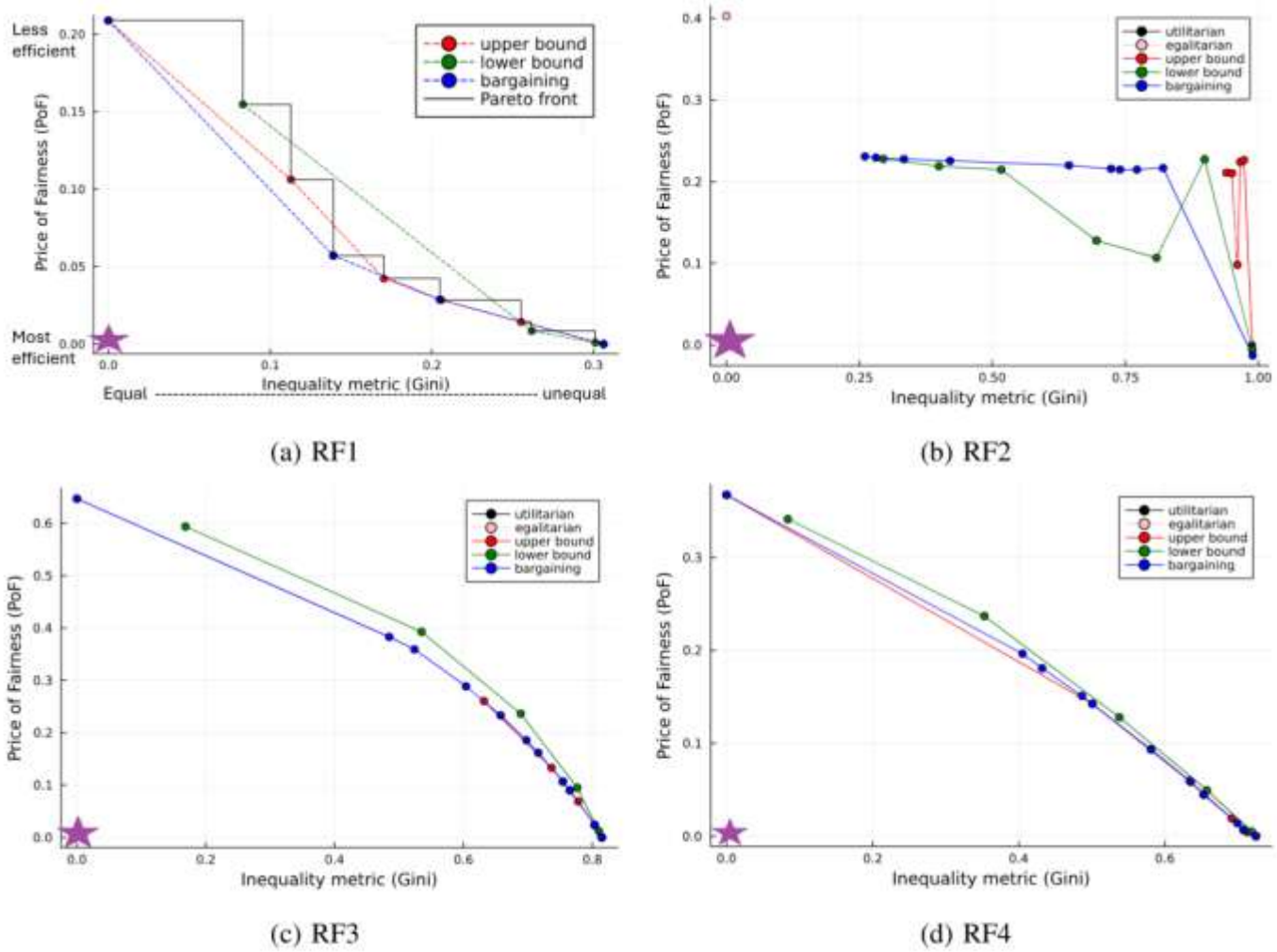

- **Quantify the Trade-off:** We use a Pareto frontier analysis to visualize the relationship between fairness and efficiency.

Results: The Trade-off Between Fairness & Efficiency

The Pareto frontiers show the performance of each fairness model for the four feeders.

Key Findings:

- **Utilitarian (pure efficiency)** and **Egalitarian (pure fairness)** represent the two extremes.
- **Bargaining and Upper-Bounded fairness consistently provide the best balance**, achieving significant gains in fairness for a small loss in efficiency.
- The lower-bounded approach was less consistent.

Summary of fairness in flexibility context

- The **notion of fairness may vary** based on social welfare definition and stakeholder considerations

- Assessing **equitable opportunity** via fairness metrics is crucial for power networks managed by DSOs that operate as an oligopoly

Thank you for your attention!

Dr. Md Umar Hashmi
Research Expert, KU Leuven, Department of Electrical Engineering
Heverlee, 08.02.2023

mdumar.hashmi@kuleuven.be

https://github.com/umar-hashmi

KU LEUVEN