Lecture 7(e): Flexibility quantification for inverter interfaced Photovoltaic

Dr. Md Umar Hashmi
KU Leuven & EnergyVille, Belgium

Joint work with Leander Heulens, Alexandre Gouveia

Agenda

- Photovoltaic growth in distribution networks
- Flexibility quantification method for PV
- Mathematical model for FQ
- Numerical case studies
- Conclusions

PV growth in distribution networks

Context

- Distributed PV adoption has surged globally and in Europe, repeatedly breaking installation records.
- In 2024, the world added 597 GW of new solar PV, about +33% versus 2023, lifting global capacity beyond 2.2 TW
- Solar generated about 11% of EU electricity in 2024, overtaking coal

Source:
https://ember-energy.org/app/uploads/2025/01/EER_2025_22012025.pdf

Solar overtakes coal generation in the EU: 2024

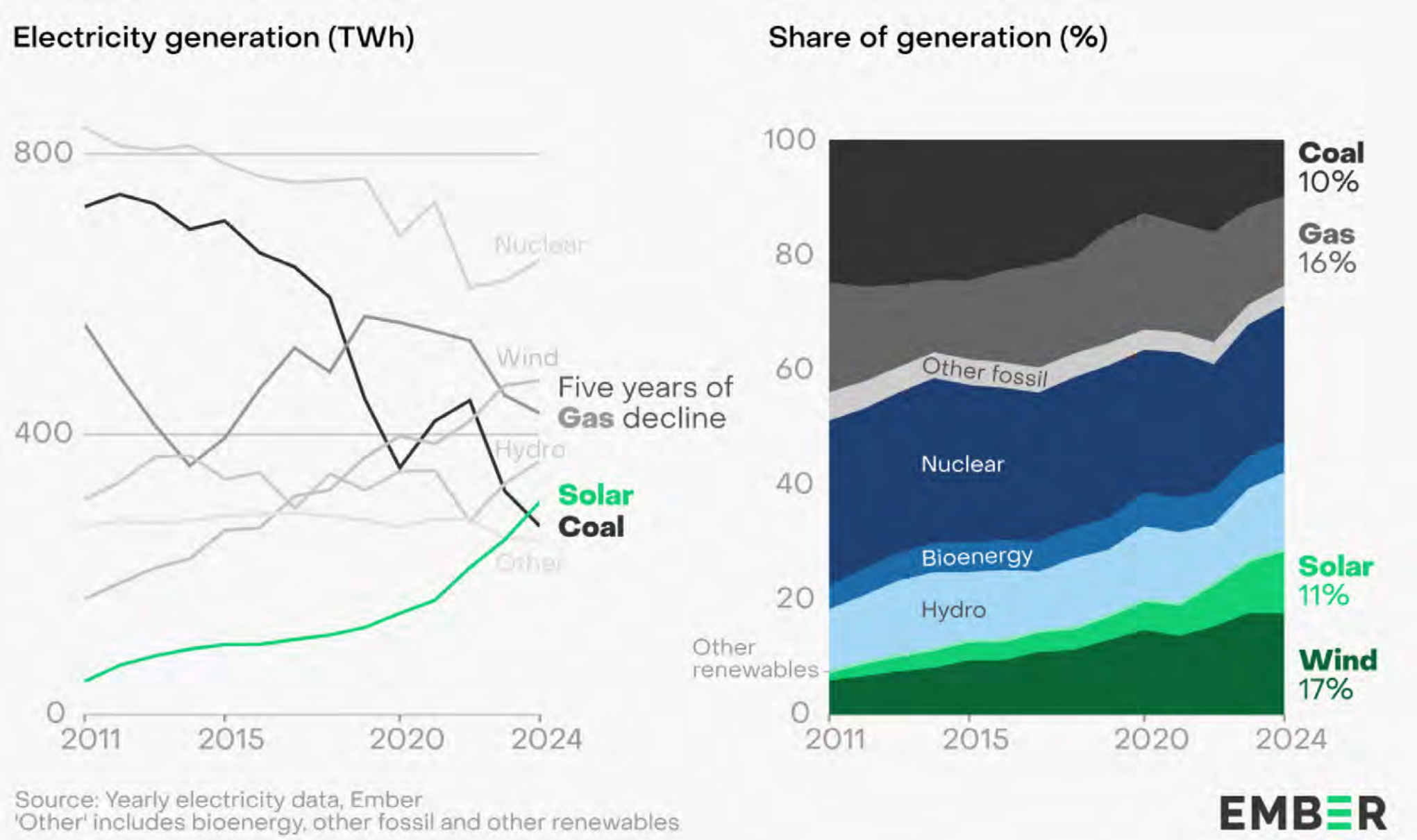

Source: https://ember-energy.org/app/uploads/2025/01/EER_2025_22012025.pdf

EU’s transition away from fossil power

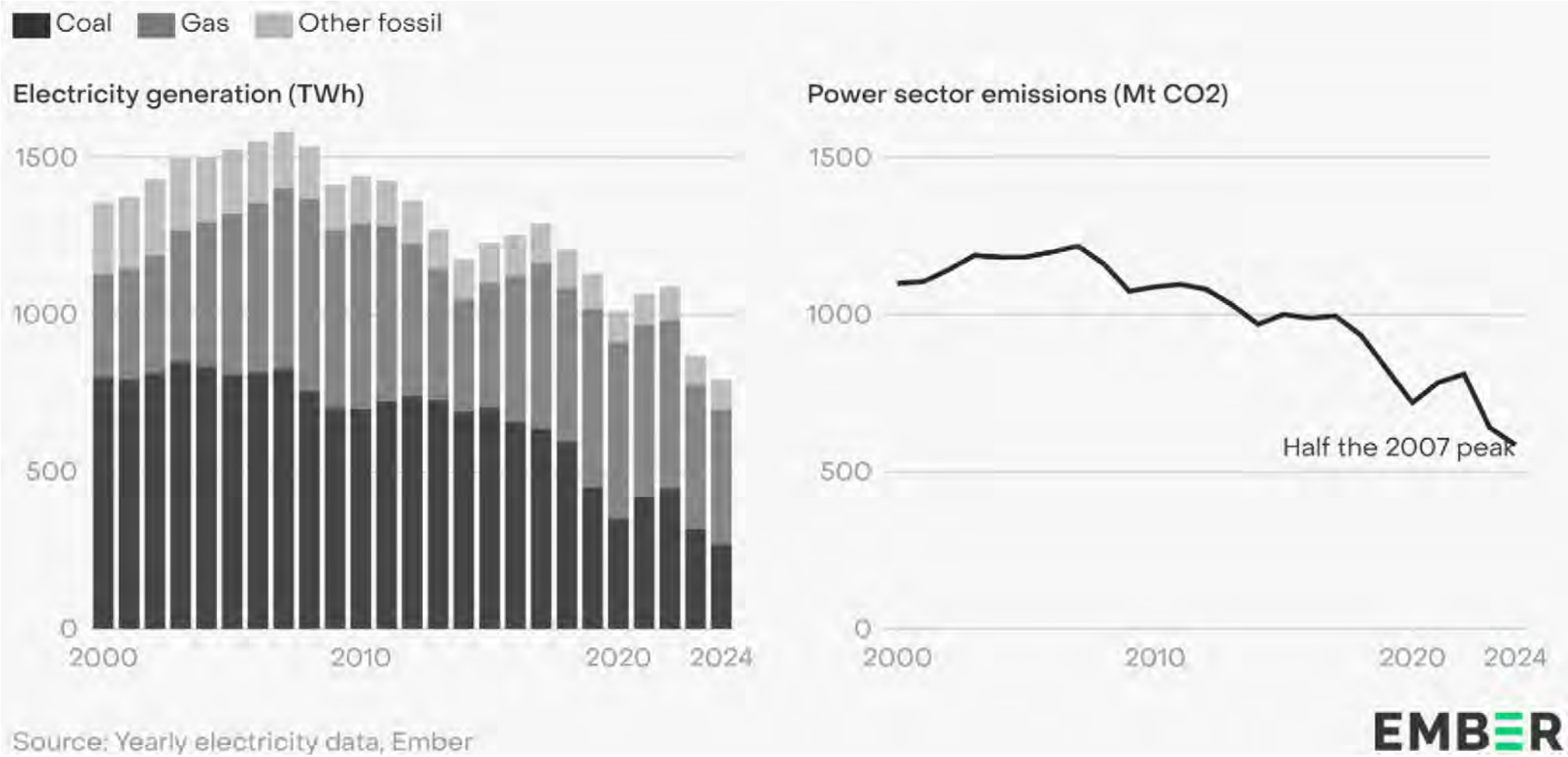

Solar power growth

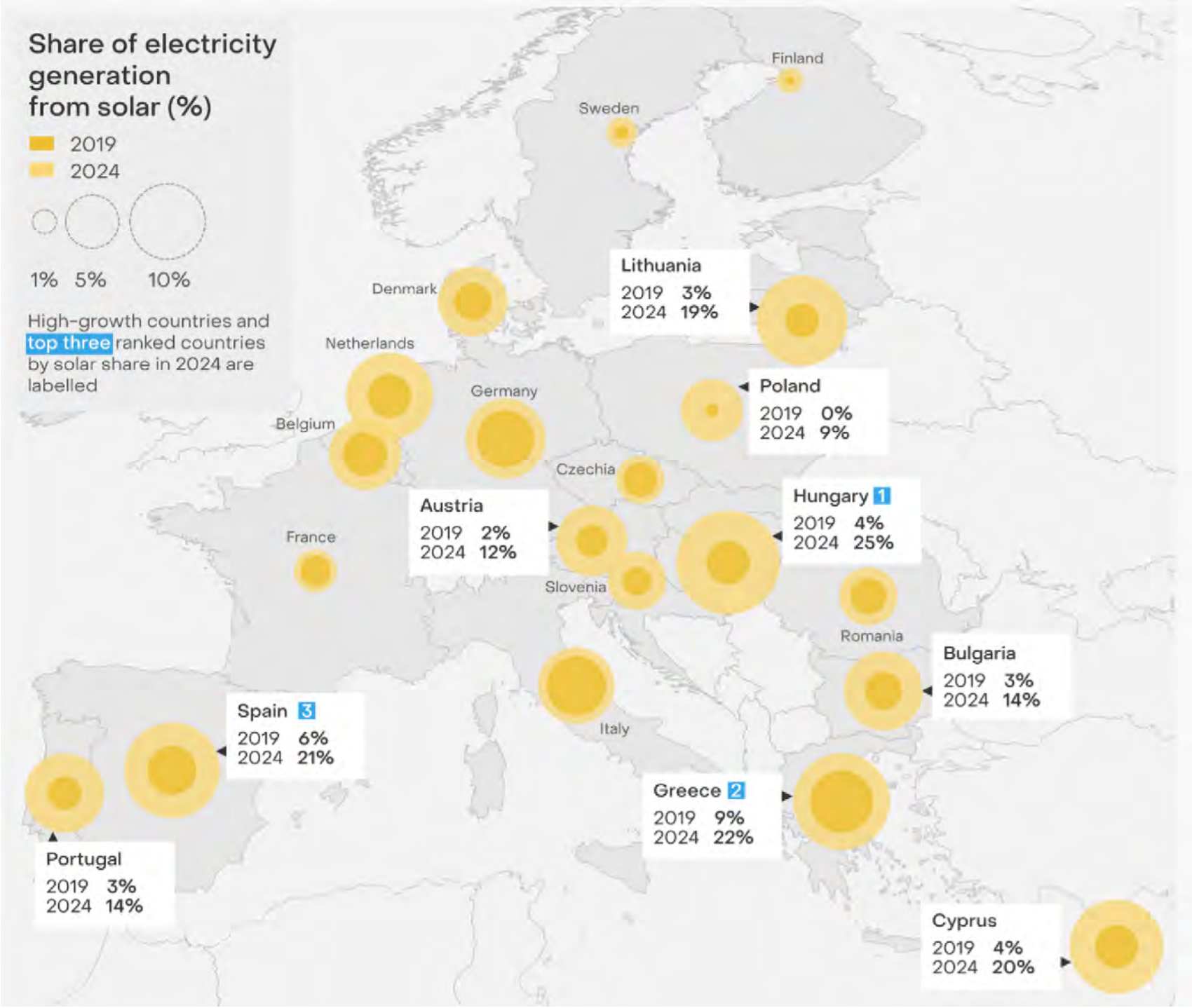

Flexibility quantification method for PV

PV interfaced by an inverter with local grid consideration

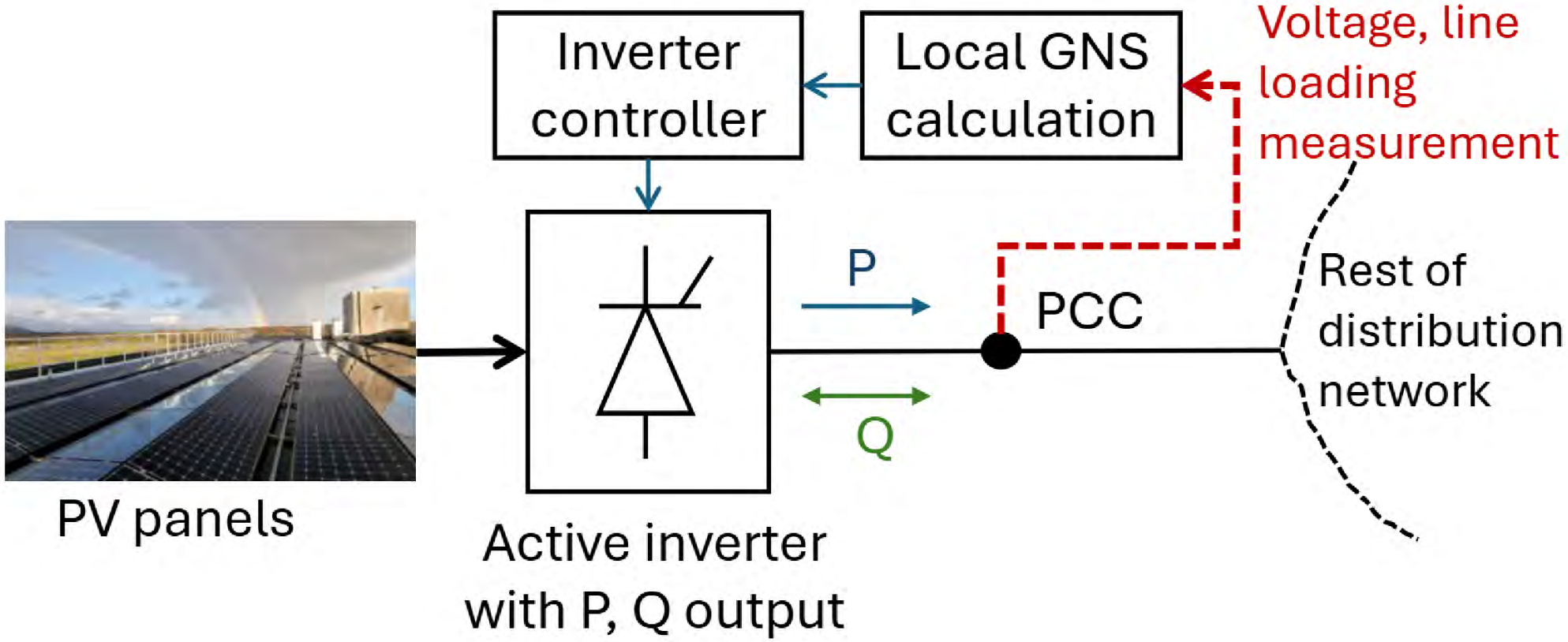

Quick introduction to inverter

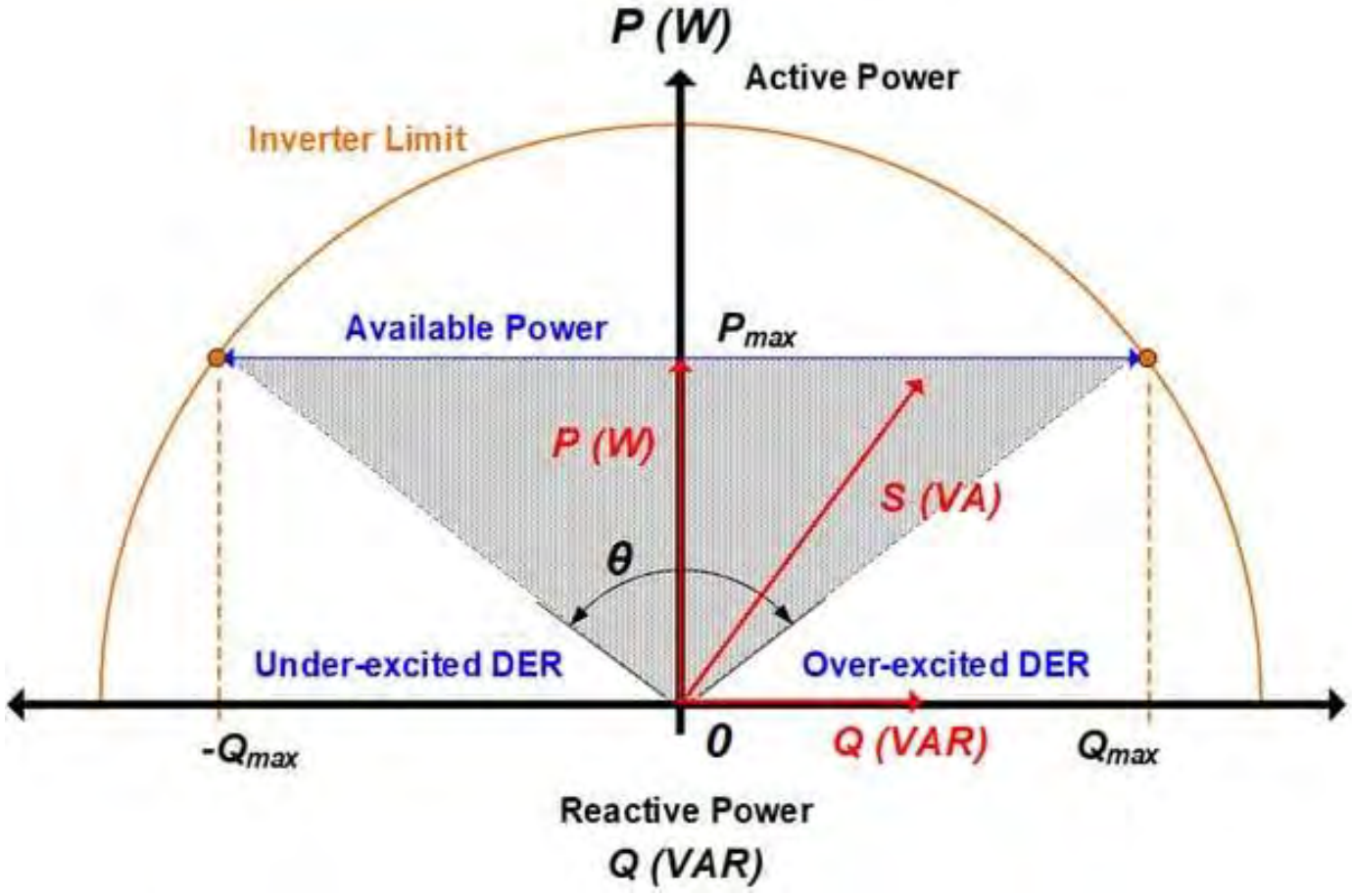

Darbali-Zamora, R., Summers, A., Hernández-Alvidrez, J., Quiroz, J. E., Johnson, J., & Ortiz-Rivera, E. I. (2018, August). Exponential Phase-Locked Loop Photovoltaic Model for PHIL Applications. In *2018 IEEE ANDESCON* (pp. 1-6). IEEE.

Notion of PV flexibility

Notion of flexibility for inverter-interfaced PV: The PV generates active power relies on *exogenous* (assumed uncontrolled) quantities: solar insolation levels, cloud cover, geometric alignment, and shading. The notion of flexibility for inverter-interfaced PV (or any other distributed generation) is defined in terms of the absence of active power (P) curtailment. The greater the P curtailment, the lower the flexibility. To minimize curtailment of active power, the reactive power, Q, of the inverter is adjusted. In case Q is not sufficient to solve the grid issue (e.g. local voltage issue), P is curtailed as the last resort.

Mathematical model for FQ

Notation

- PV generation: $P^{PV}_{i,t} \in [0, P^{PV}_{i,max}]$
- Converter rating is denoted by S^{inv}_{i}
- PV flexibility is defined as

$$E^{\text{flex}}_{\text{PV}} = E^{\text{PV}} - E^{\text{curt}}$$

$$E^{\text{PV}} = \sum_t P^{\text{PV}}_{i,t} \Delta t \qquad E^{\text{curt}} = \sum_t P^{\text{curt}}_{i,t} \Delta t$$

- Per unit flexibility is given as $E^{\text{flex}}_{\text{PV,pu}} = 1 - \frac{E^{\text{curt}}}{E^{\text{PV}}}$

Control models

- Model M1: Full Curtailment on Violation
- Model M2: Threshold-Based Partial Curtailment
- Model M3: Pure Voltage–Reactive Droop
- Model M4: Optimal Active & Reactive Power Control

Numerical case studies

Numerical case setting

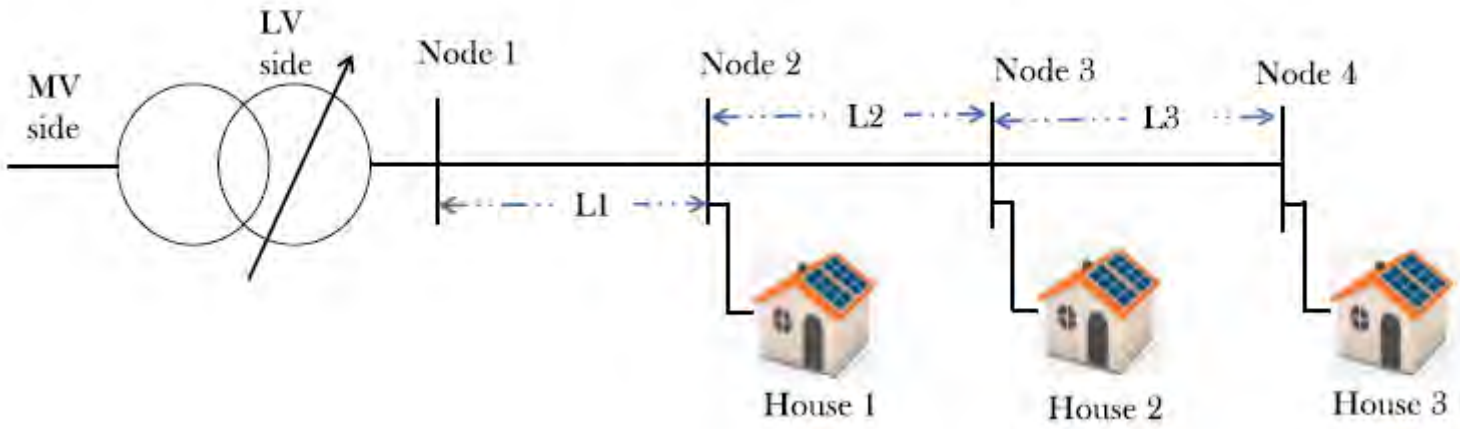

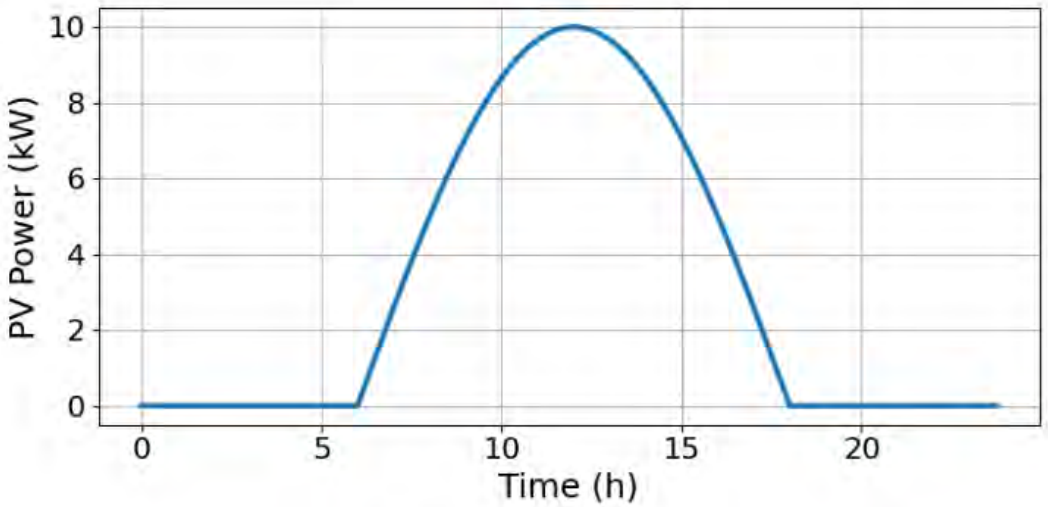

(a) PV Production Profile

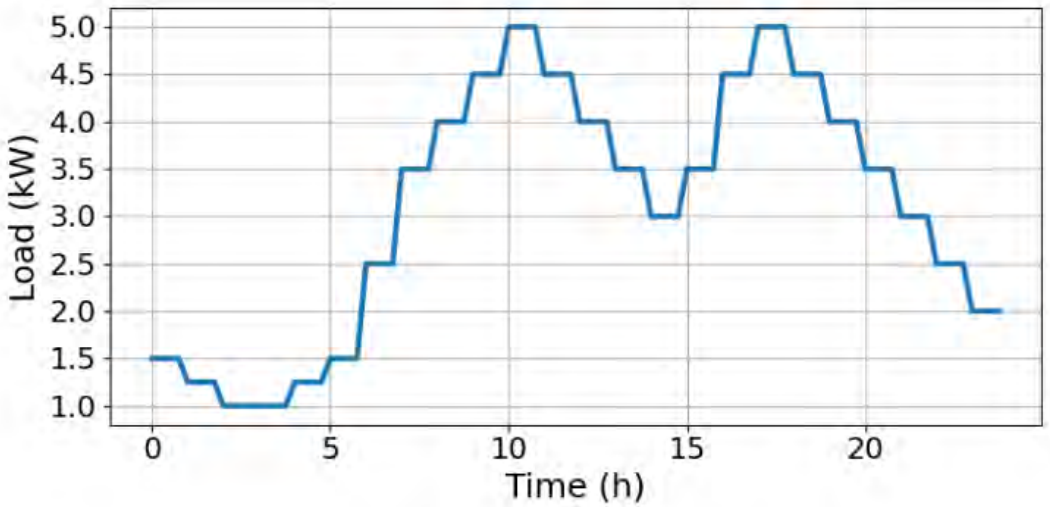

(b) Load Demand Profile

System information

- All inverters are rated at S^{inv} = 10 kVA

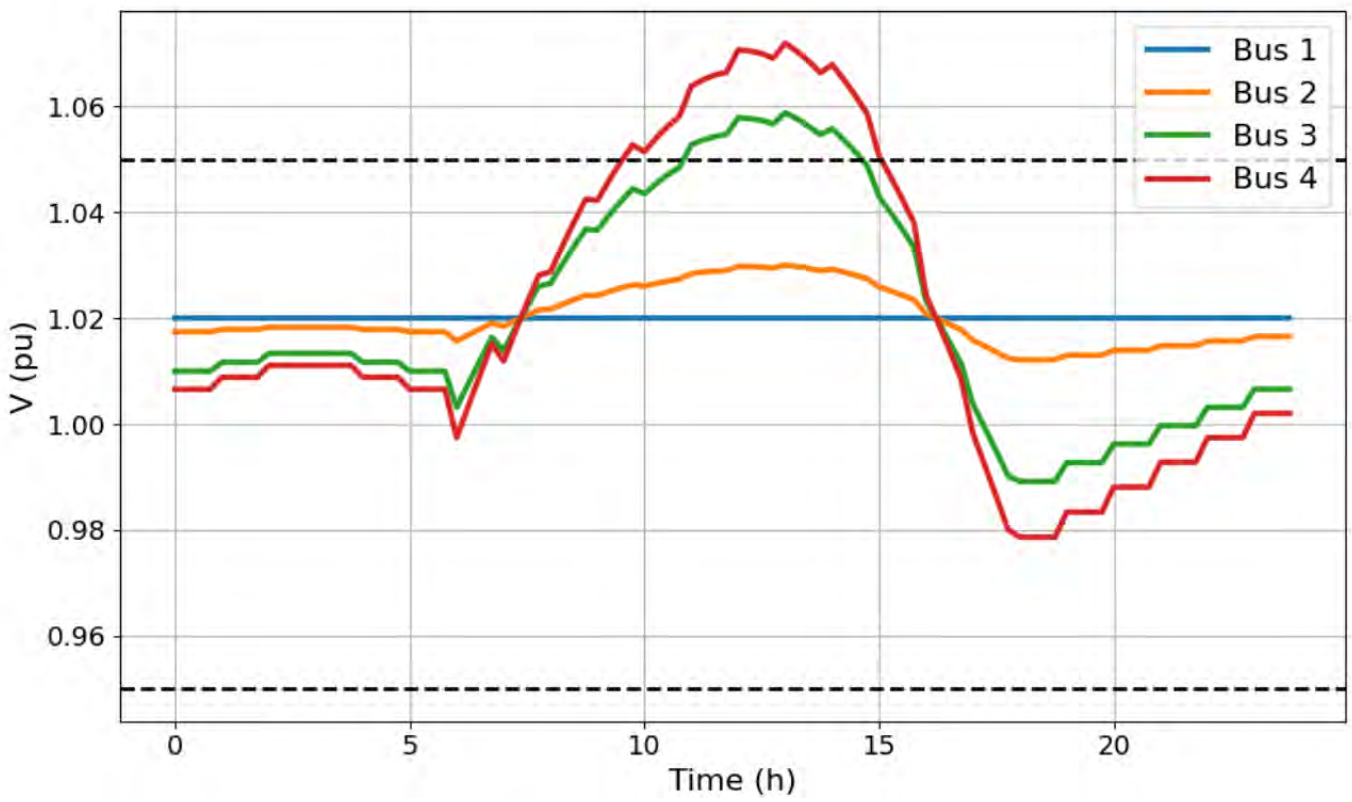

Nominal case without active correction

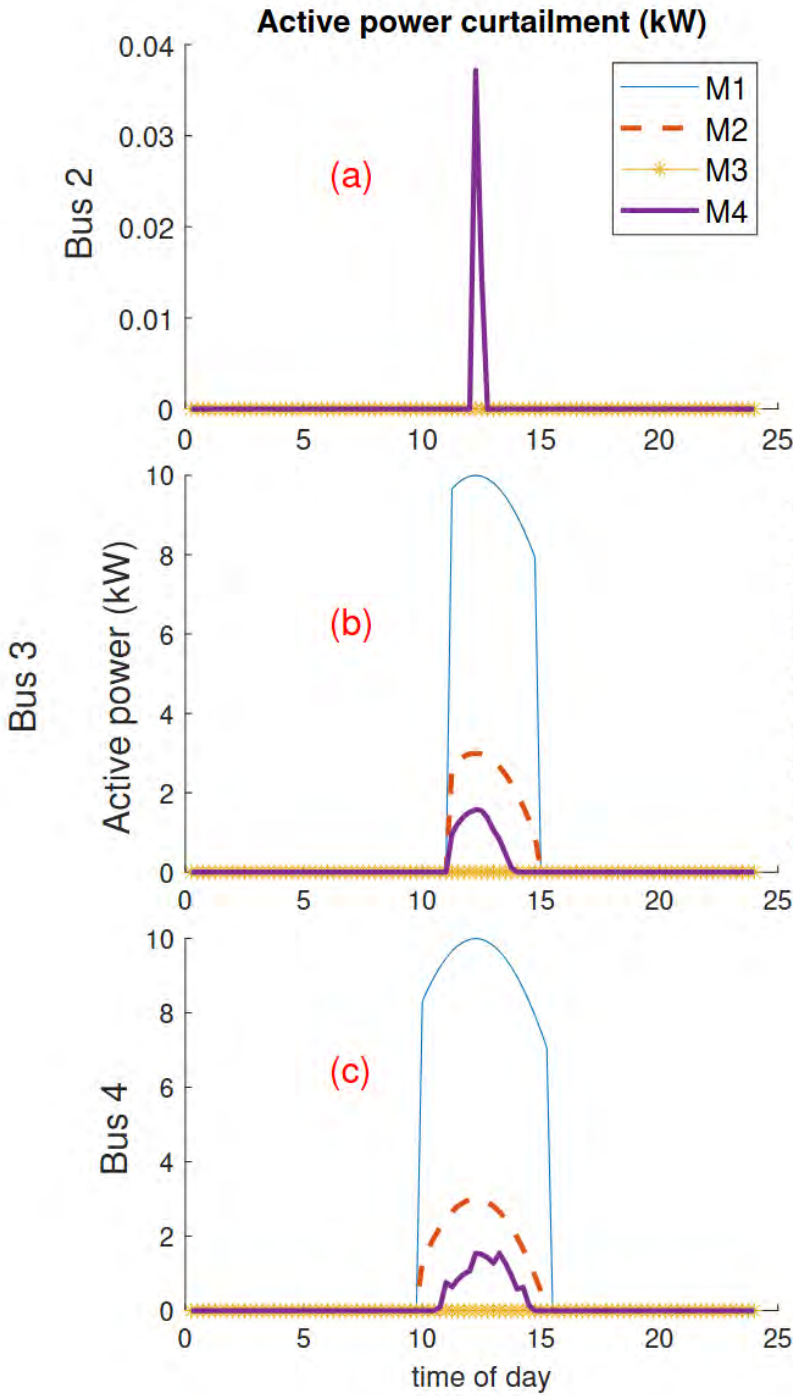
Active power curtailment (kW)
Bus 2
Bus 3
Bus 4
Active power (kW)
time of day
(a)
(b)
(c)
M1
M2
M3
M4
0.04
0.03
0.02
0.01
0
10
8
6
4
2
0
5
10
15
20
25

Results

Comparing 4 models

r_i	Curtailment fraction at bus i
γ_i	Share of total curtailment at bus i
E_i^{V1}	Total voltage vio. energy

Model	Bus	E_i^{PV} (kWh)	E_i^{curt} (kWh)	$E_{\mathrm{PV,pu},i}^{\mathrm{flex}}$ (pu)	r_i (%)	γ_i (%)	E_i^{react} (kVAr · h)	E_i^{V1} ($\times 10^{-3}$ pu · h)
M1	Bus 2	76.37	0.00	1.00	0.0	0.0	0	0
	Bus 3	76.37	35.33	0.54	46.3	41.3	0	0
	Bus 4	76.37	50.14	0.34	65.7	58.7	0	0
	Network	229.11	85.47	0.63	37.3	—	0	0
M2	Bus 2	76.37	0.00	1.00	0.0	0.0	0	0
	Bus 3	76.37	9.08	0.88	11.9	43.8	0	0
	Bus 4	76.37	11.64	0.85	15.2	56.2	0	7
	Network	229.11	20.72	0.91	9.0	—	0	7
M3	Bus 2	76.37	0	1.00	—	—	20.51	0
	Bus 3	76.37	0	1.00	—	—	36.60	5
	Bus 4	76.37	0	1.00	—	—	37.03	29
	Network	229.11	0	1.00	—	—	94.14	34
M4	Bus 2	76.37	0.01	1.00	0.02	0.2	3.31	0
	Bus 3	76.37	3.02	0.96	4.0	44.0	8.57	0
	Bus 4	76.37	3.82	0.95	5.0	55.8	22.29	0
	Network	229.11	6.85	0.97	3.0	—	34.17	0

Conclusions

Key take aways

- PV generation share is growing more rapidly than anticipated
- The notion of flexibility for PV generation is to minimize curtailment of active power
- Numerical results compare
  - Traditional methods of
    - Rule based curtailment
    - Volt-watt control
    - Volt-var control
    - P-priority volt-watt and volt-var control
  - PV flexibility can be maximized by adjusting reactive flexibility and minimizing locational discrepancy

Thank you for your attention!

Dr. Md Umar Hashmi
Research Expert, KU Leuven, Department of Electrical Engineering
Heverlee, 08.02.2023

mdumar.hashmi@kuleuven.be

https://github.com/umar-hashmi

KU LEUVEN