Lecture 9(b): Network consideration for behind-the-meter assets

Dr. Md Umar Hashmi

KU Leuven & EnergyVille, Belgium

Agenda

- Flexibility classification
- What is fairness?
- Notions of fairness

Motivation

- Increasing distributed energy resources (DERs)
- Transition from consumers to prosumers
- **Challenges :**Grid congestion and voltage deviations

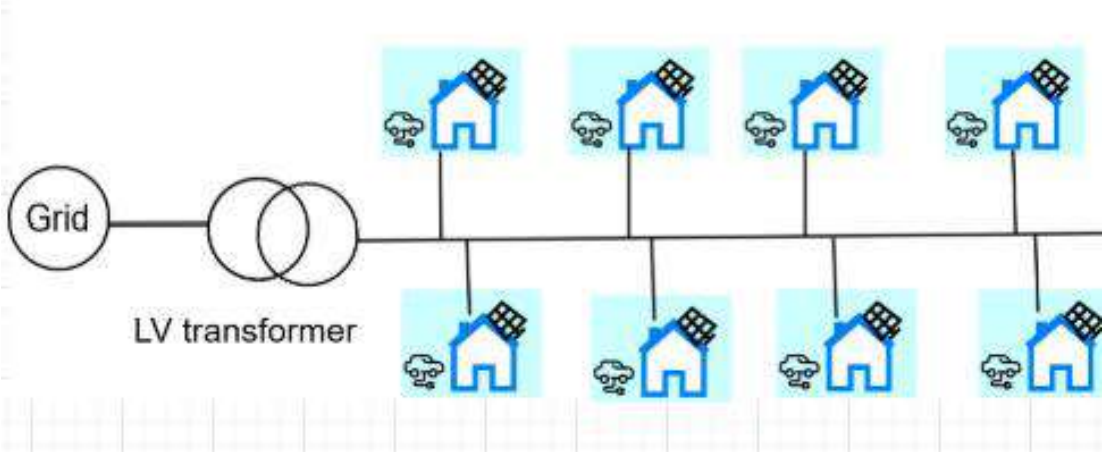

Fig.1. Typical Low voltage network

Behind the meter assets

- BTM assets can aggravate grid operation if not coordinated

- **Opportunities:** unlocking the flexibility
  - Shiftable loads (HVAC, EV ,washing machine, Dishwasher, cloth dryer) and
  - DERs (PV,EV,BESS)

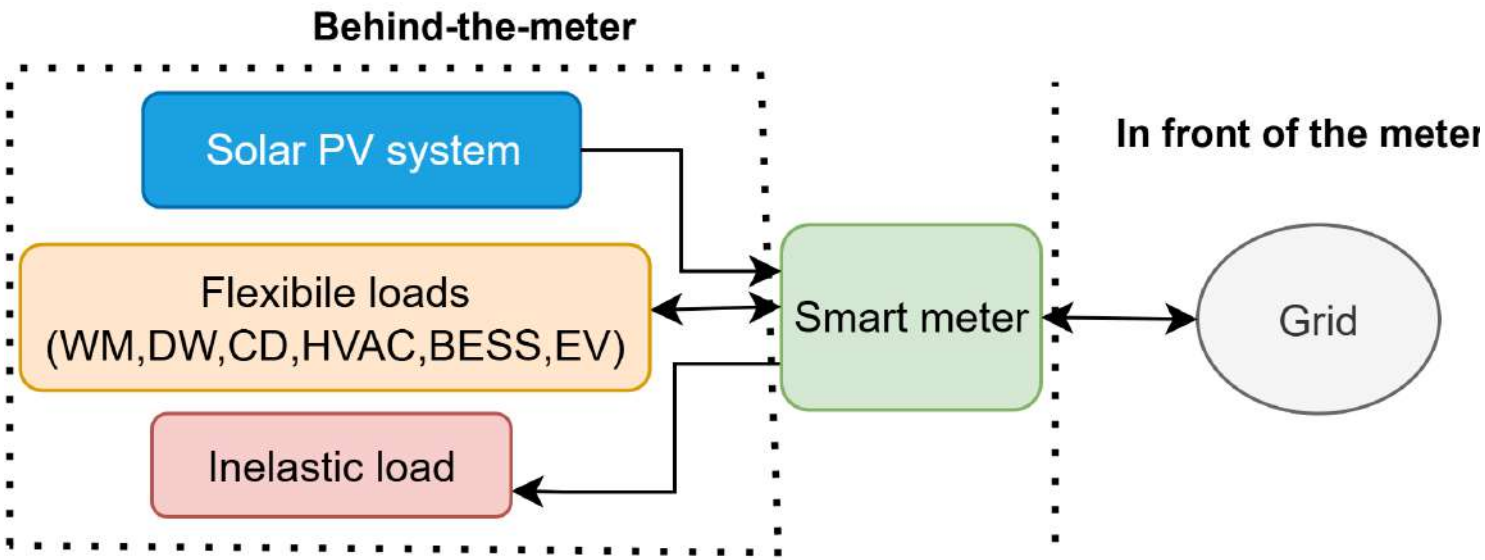

Objective of this session

- Identify key prosumer objectives and constraints in grid-aware flexibility operations
- Propose a classification framework for how grid aspects are considered when controlling BTM assets.
- Explore flexibility preferences in using BTM assets.
- Identify critical research gaps.

Key objectives and constraints

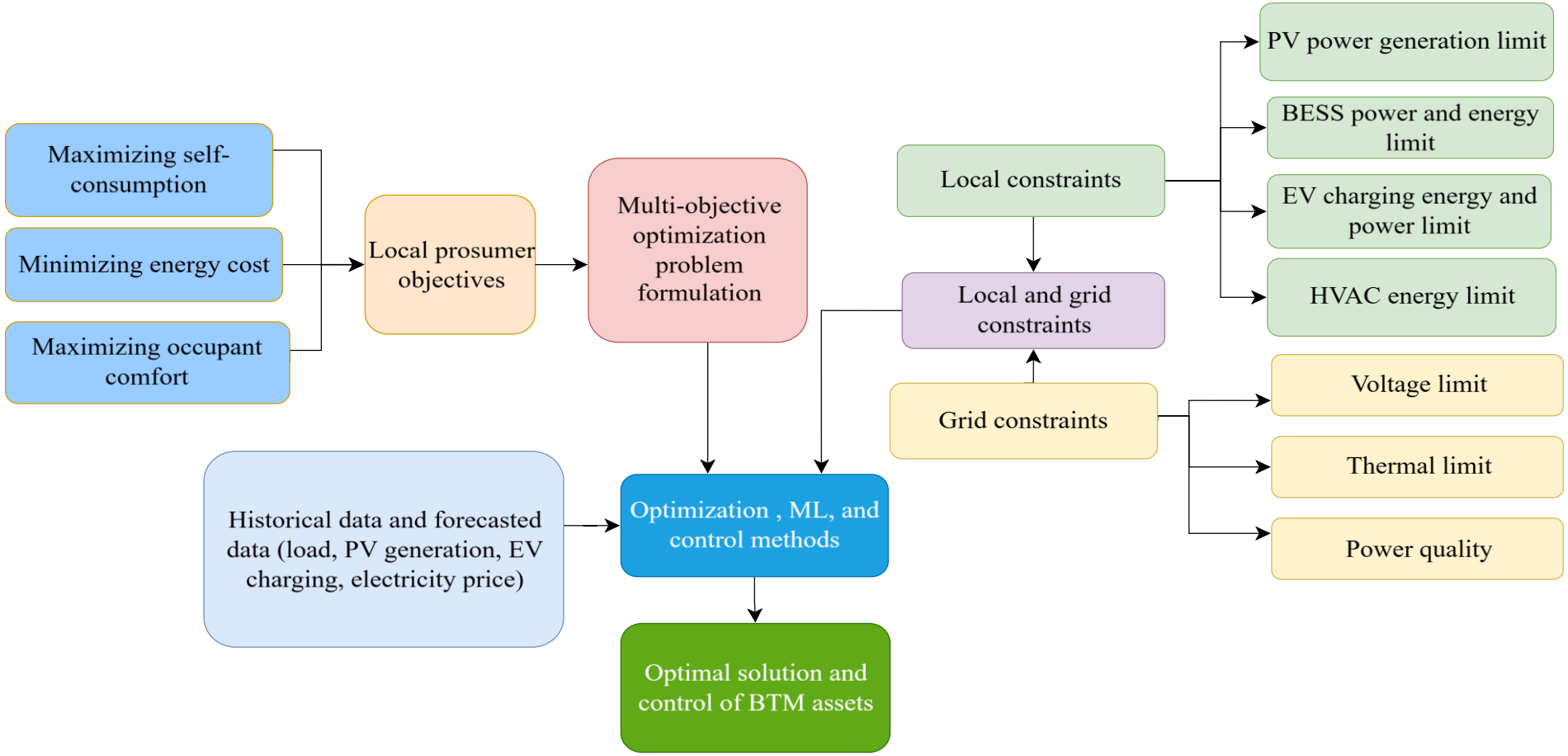

How to consider the network in operation of distributed flexibility?

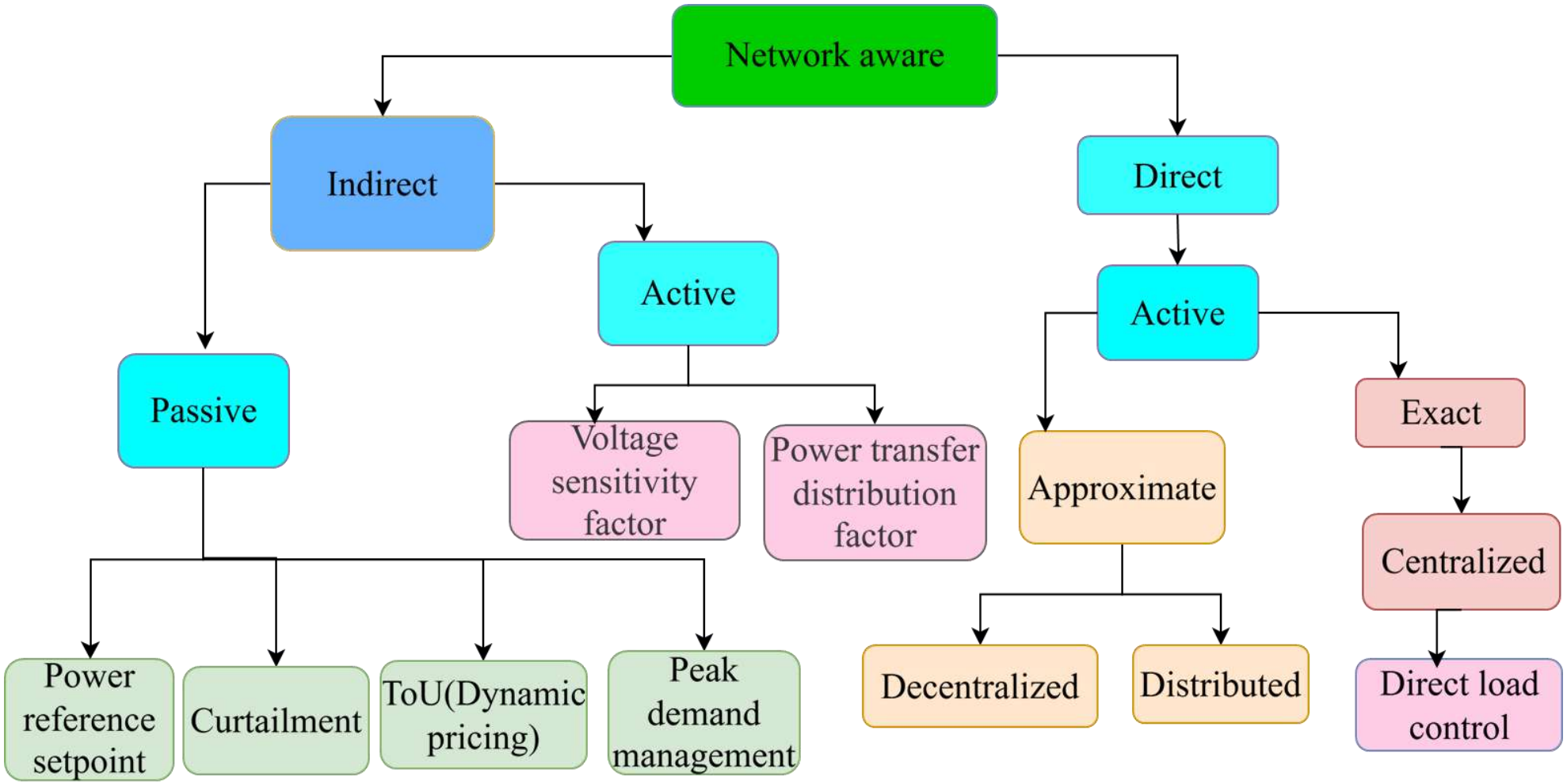

Central network consideration

(Direct + Exact)

How it works:

- DSO directly computes exact grid constraints using full network model (Topo, impedances, loads, DER locations).
- Flexibility schedules are validated or overridden centrally to ensure voltage, thermal, and protection limits are not violated.
- Typically implemented via centralized, model-based optimization.

Key Features:

- High accuracy, deterministic grid security.
- Enables real-time constraint enforcement.

- Cons: (i) Requires detailed models + high data quality. (ii) Centralized control → poor scalability, limited customer autonomy.

Market based network consideration

How it works:

- Network constraints are not enforced directly; instead, market signals steer flexibility behaviour.
- Price signals, dynamic tariffs, or peak charges indirectly reduce stress on the grid.

Key Features:

- Scalable and decentralised.
- Preserves customer autonomy.
- Encourages economically efficient responses.

- Cons: (i) Indirect → no guarantee all grid violations are avoided. (ii) Requires sufficient price elasticity of flexible assets. (iii) Slower reaction to sudden congestion events.

Approximate network consideration

How it works:

- DERs or aggregators receive simplified grid limits (local or feeder-level) instead of exact power-flow-based constraints.
- Uses linearized sensitivity factors or DOEs to create decentralized or distributed optimization.

Key Features:

- Captures grid constraints without sharing full network model.
- Enables scalable, distributed, privacy-preserving flexibility operation.
- Reduces coordination overhead between DSO and aggregators.

- Cons: (i) Approximation error may lead to conservatism or occasional violations. (ii) Quality depends on accuracy of sensitivities and load forecasts.

Flexibility preferences in using BTM assets

EV

- Charging preferences (arrival and departure times)
- State of Charge (SoC) at departure

Thermostatic load

- Thermal comfort preferences
- Temperature setpoints

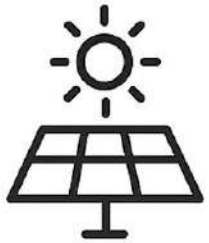

PV

- Self-consumption maximization
- Selling excess energy
- Curtailment management

BESS

- Energy cost optimization
- Balancing between self-consumption and grid interaction

What are the research gaps?

- Prosumer–Grid trade-off
  - Balancing prosumer preferences with grid requirements.
- Privacy-friendly control frameworks
  - Enabling BTM flexibility without intrusive data sharing.
- Scalable coordination
  - Distributed control and optimization for multiple assets across prosumers.

Summary

- Need for simultaneous consideration of prosumer objectives, flexibility preferences, and grid constraints
- Both direct and indirect grid consideration can enhance operational flexibility
- A multi-objective optimization approach is essential to balance cost, comfort, and grid support
- BTM flexibility can be a powerful, low-cost resource for a clean and resilient grid

Thank you for your attention!

Dr. Md Umar Hashmi
Research Expert, KU Leuven, Department of Electrical Engineering
Heverlee, 08.02.2023

mdumar.hashmi@kuleuven.be

https://github.com/umar-hashmi

KU LEUVEN