Available online at www.sciencedirect.com

ScienceDirect

journal homepage: www.elsevier.com/locate/bbe

Original Research Article

Lumped models of the cardiovascular system of various complexity

Filip Ježek [a,*], *Tomáš Kulhánek* [b], *Karel Kalecký* [a], *Jiří Kofránek* [b]

[a] *Faculty of Electrical Engineering, Czech Technical University in Prague, Prague, Czech Republic*
[b] *The Institute of Pathological Physiology, First Faculty of Medicine, Charles University in Prague, Prague, Czech Republic*

ARTICLE INFO

Article history:
Received 12 January 2017
Received in revised form
22 July 2017
Accepted 9 August 2017
Available online 30 August 2017

Keywords:
Modelica
Modeling methodology
Cardiovascular modeling
Lumped model

ABSTRACT

Purpose: The main objective is to accelerate the mathematical modeling of complex systems and offer the researchers an accessible and standardized platform for model sharing and reusing.
Methods: We describe a methodology for creating mathematical lumped models, decomposing a system into basic components represented by elementary physical laws and relationships expressed as equations. Our approach is based on Modelica, an object-oriented, equation-based, visual, non-proprietary modeling language, together with Physiolibrary, an open-source library for the domain of physiology.
Results: We demonstrate this methodology on an open implementation of a range of simple to complex cardiovascular models, with great complexity variance (simulation time from several seconds to hours). The parts of different complexity could be combined together.
Conclusions: Thanks to the equation-based nature of Modelica, a hierarchy of subsystems can be built with an appropriate connecting component. Such a structural model follows the concept of the system rather than the computational order. Such a model representation retains structural knowledge, which is important for e.g., model maintainability and reusability of the components and multidisciplinary cooperation with domain experts not familiar with modeling methods.

© 2017 Nalecz Institute of Biocybernetics and Biomedical Engineering of the Polish Academy of Sciences. Published by Elsevier B.V. All rights reserved.

1. Introduction

Our motivation for lumped-parameter mathematical modeling in physiology includes teaching, studying and explaining clinical situations, developing educational simulators, demonstrating significant physiological regulations and pathological phenomena, as well as analysis of control loops, design of control strategies and model identification. To fulfill these needs, we require a robust simulation tool.

The first prerequisite to compare and integrate models is to have one tool or environment in which all the models may run

* *Corresponding author at*: Department of Cybernetics, Faculty of Electrical Engineering, Czech Technical University in Prague, Karlovo namesti 13, 121 35 Prague 2, Czech Republic.
E-mail address: jezekfi1@fel.cvut.cz (F. Ježek).
http://dx.doi.org/10.1016/j.bbe.2017.08.001
0208-5216/© 2017 Nalecz Institute of Biocybernetics and Biomedical Engineering of the Polish Academy of Sciences. Published by Elsevier B.V. All rights reserved.

together. Secondly, the tool and the methodology must allow flexible extensions of the models and a possibility to effectively refactor them. Often the description of models in literature contains mistakes (as reported in [1]) and even when the source code is provided, a reimplementation is usually required to integrate the model, due to language or methodological incompatibilities. In addition, the resulting model should be understoodable also for domain experts, who are not familiar with the exact modeling methodology, which is becoming hard to achieve, as the models grow in complexity [2].

The nestor of integrative physiological modeling, A.C. Guyton, introduced large schematics of overall regulation of blood pressure in his prominent article [3], an iconic demonstration of the complex nature of bodily regulations. The model itself was implemented originally in procedural Fortran language, later, with the advent of advanced block-oriented languages, re-implemented in Simulink [4] to reflect the same visuals. Similar to Simulink, a number of other block-oriented approaches exists, namely AmeSim, Scicos, LabView, or VisSim. However, the complexity of the model increased during the transition from Guyton's original model to more complex HumMod's [5], implemented in custom XML format. The model becomes too complex to re-implement and maintain it using block-oriented tools.

The family of XML based modeling mark-up languages, such as SBML [6] or CellML [7] have a lot of attention in biomedical modeling community, but we find them too demanding to maintain large models with. Some other equation-based tools were employed in the field of biomedical engineering, namely JSim [8] or Berkeley-Madonna [9], but as they are not object-oriented, the reuse, maintenance and integration of other models is complicated.

The object-oriented approach of Modelica for complex models has been suggested already by Cellier and Nebot [2]. Brunberg introduced the HumanLib, first Modelica library for cardiovascular modeling [10]. de Canete [11] reported, that the Modelica approach significantly reduced the modeling effort and facilitated the model reuse. Other benefits of equation-based, object-oriented implementation of the pulsatile cardiovascular system over a block-oriented approach are described in detail in [12]. Therefore, an alternative implementation of the HumMod model was introduced in the object-oriented acausal Modelica language as Physiomodel [13]. Fig. 1 illustrates, that the model structure in block-based modeling language (here Simulink) corresponds rather with a computational algorithm, while the model structure in Modelica is more similar to the modeled reality itself.

Although the usage of object oriented modeling, which could offer great universality, has already been embraced in the field, a comprehensive open-source modeling workbench is still missing. The goal of this paper is to offer a standardization in the field of physiological modeling by offering a modern methodology together with a free workbench for cardiovascular modeling. The methodology should be easy to use and understandable also for domain experts not familiar with the particular modeling tool. It should offer simple composability of modules and provide robust extensibility. It should be possible to combine the submodels as required by the planned usage (as envisioned in [14]). Moreover, the platform should be open to non-commercial tools.

2. Materials and methods

Based on our experience in developing and integrating compound models, we think that the following features are the most important for building comprehensible complex models of human physiology with an integrative approach:

1. Equation-based modeling – the relations among variables of a physical system are expressed declaratively in a model using general algebraic or differential-algebraic equations. The causality (i.e. the solution) of the model of a physical system is left to a modeling tool, which figures out the dependent and independent variables during model compilation. In an equation-based model, a minor structural

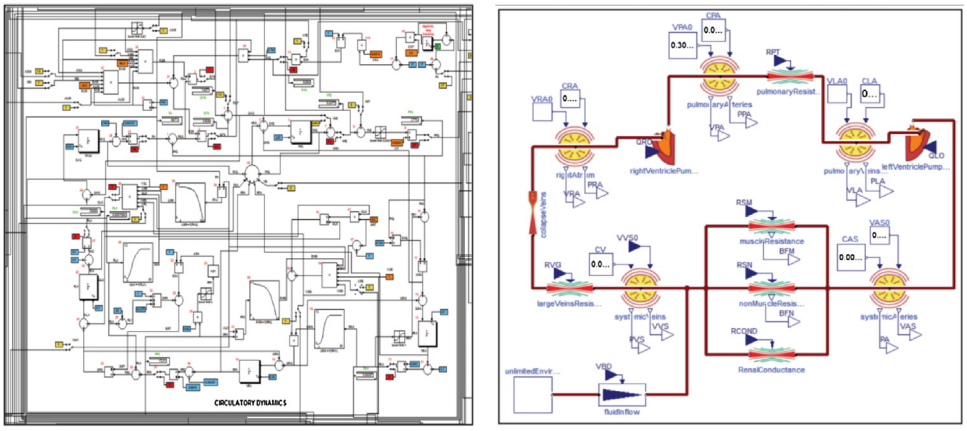

Fig. 1 – The implementation of the core part of Guyton's model: (A) Circulatory dynamics – the detailed structure of the central part of the Guyton's model implemented in Simulink, preserving the original Guyton's schematics, (B) The same part of the model implemented in Modelica using concepts of physical equation-based modeling. This implementation contains connected instances of two pumps (of the right and left heart ventricles), elastic vascular compartments and resistances.

change to the system does not lead to major modifications of the model. Equation-based modeling seems to capture the essence of the modeled reality better and the simulation models are much more legible; thus, the users are less prone to making mistakes while using block-oriented models [15,16].

2. Object-oriented modeling – object-orientation allows us to decompose a system into multiple levels of abstraction. These levels are encapsulating unique entities (classes), which can be composed or inherited into a hierarchy of objects comprising a complex system.
3. Structural plausibility – using object-oriented and equation-based modeling, the models can provide additional knowledge of the system, that is a structural knowledge based on the components, which not only improves orientation but also adds the physiological plausibility of such a model. Well-structured models are then visually easily comparable and understandable by other domain experts.

2.1. *Modelica*

The language which suits all the needs noted above is Modelica. General usage of Modelica language has been thoroughly described in numerous publications, notably [17].

Modelica itself is just a language specification developed and maintained by Modelica Association. Besides commercial development tools (Dassault Dymola, Wolfram SystemModeler, etc.), there are also the open-source tools, namely OpenModelica, which makes the platform available to everyone. The noted tools provide visual user interface for modeling and simulation. Thus, we do not have to concentrate our efforts on tuning the language nor developing the visual user interface tool. Its multidomain nature enables us to use it for physiological modeling out-of-the-box, moreover benefiting from available open source libraries.

The Modelica tools usually contain a number of state-of-the-art numerical non-linear solvers, including basic Euler, better Runge–Kutta, most used and most stable variable-step DASSL [18], and several others. These algorithms ensure that the numerical error is below the given adjustable tolerance limits. The trade-off for smaller tolerance is a longer simulation time.

The Modelica language is among a few modern modeling languages using the declarative equation-based model description; a system is modeled as a set of equations, which are required to be valid all simultaneously rather than be sequentially evaluated by the algorithmic assignments one at a time (as in the MATLAB environment). The derivation of causality is left to the tool itself, which considerably saves time during the model development [15].

Modelica is also an object-oriented language. It allows for both inheritance and object composition, which is valuable for code reusability and maintenance. The visual interconnection of individual objects is realized through a connector, which is a special type of an object that carries information necessary for implicit construction of interconnecting equations. The connecting lines between acausal submodels resemble electrical wires – acausal connectors could contain both generalized effort variable (which corresponds to Voltage in the electrical domain, or pressure in hydrodynamics) and flow variable (corresponding to electrical current, or volume flow). By definition such connections conform to Kirchhoff laws at each crossing (the same value for all efforts variables, whereas the sum of flows equals to zero). Through these lines, we realize interconnections of the equations behind the submodels.

Thus, the computation flow procedure is replaceable, i.e. inputs and outputs of such a component are to be inferred from the whole model structure. For example, we can connect the same submodel of an elastic compartment to either a pressure source (thus maintaining appropriate volume) or a flow source (thus rising pressure and volume). This enables excellent reusability and allows easy model integration.

Thanks to the acausality and the object-oriented nature, the model's structure in Modelica is much closer to real object structure than any other language, which could lead to significantly shorter and error-prone implementation, as shown in Fig. 2.

2.2. *Physiolibrary*

The strength of the equation-based tool is enhanced by a number of libraries, both proprietary and open-source. The possible reason that biomedical simulation has not yet fully adopted Modelica may be the lack of specialized libraries. This drawback has recently been solved by Physiolibrary [19], which originally emerged from the construction of Physiomodel, a large integrative model of human physiology [13], an extended Modelica implementation of HumMod [5]. Physiolibrary later proved to be useful for a variety of small to large models in the physiological area.

It consists of pre-defined acausal submodels in 5 domains (Hydraulic, Thermal, Chemical, Osmotic and Population).

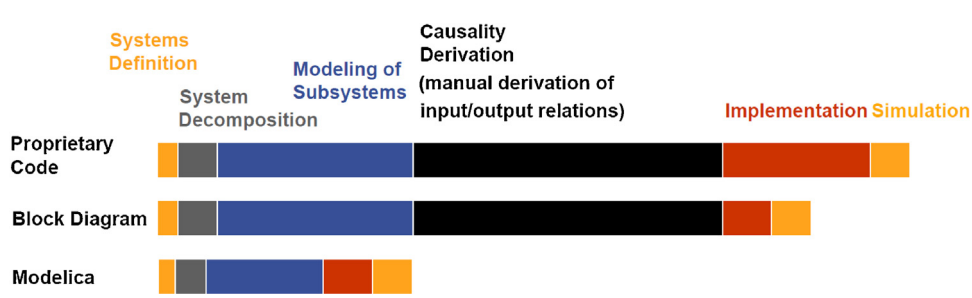

Fig. 2 – The illustration of acceleration of model development speed in proprietary code (e.g. Fortran, C, Java, etc.), block-based languages (e.g. Simulink) and Modelica.

All components are based on SI units, preferably strong-typed, designed for integration and interconnections of new submodels and providing convenient unit aliasing, i.e. the user can use a number of compatible derived units, but in the background, all computations are strictly SI.

2.3. Modeling methodology

Below, we introduce an exemplary implementation of models of the cardiovascular system in Modelica and Physiolibrary using the features mentioned above. In contrast to the papers in which the original models were published, the model's implementation is shown in clear diagrams (real model implementation), and not schematic figures alone. In addition to a component-based model of hemodynamics, we introduce integrated subsystem models with additional control mechanisms. In the introduced methods, parts of the models are divided into components that are interchangeable and replaceable, which suggests the possibility of further maintainability and reusability.

2.4. Model composition

Presented cardiovascular models are built using basic blocks like conductance, elastance and inertance from the Physiolibrary. These blocks follow the same rules as resistivity, capacity and inductivity from the electrical domain. We are thus capable of building any continuous model using just these components. However, for discontinuities, nonlinearities, and blocks that are convenient to depict causal formalism (e.g. empirical functions) we create new submodels. The equations behind the components could be found in the model source code in Supplement 1.

An example of implementation of the simple model by *Smith* [20] is shown in Fig. 3. This methodology is presented as a flat model, i.e. all components are on the same level.

2.5. Model decomposition

While the model implementation described above is presented in one diagram and with a small number of components, it is practical for decomposition of complex models into submodels following anatomical or physiological subsystems to facilitate model reuse [21].

The concrete implementation of the cardiovascular system model is decomposed into subsystems, as illustrated in Fig. 3. The individual subsystems implement the abstraction of heart, pulmonary or systemic circulation, as it is common in object-oriented languages like Java, C# or C++. Any implementation of the abstract class, e.g. abstract pulmonary circulation, is here interchangeable with its other implementations. This is depicted in Fig. 4.

As shown, not only the hierarchical model structure adds clarity to complex models we can also interchange the blocks of various complexity, owing to using generalized object-oriented structure. Thus, we can use simple models for systems of low impact in an experiment, whereas it is possible to use more detailed models for the key parts. We can easily combine appropriate models, depending on the specific use case (e.g. we can replace the less detailed heart model with more detailed model).

For more complex use cases, we need to include bodily regulations to basic cardiovascular systems. Because the general regulations could be depended on or affect any part of the abstract system, we needed to employ so-called expandable connectors (a Modelica primitive type) which

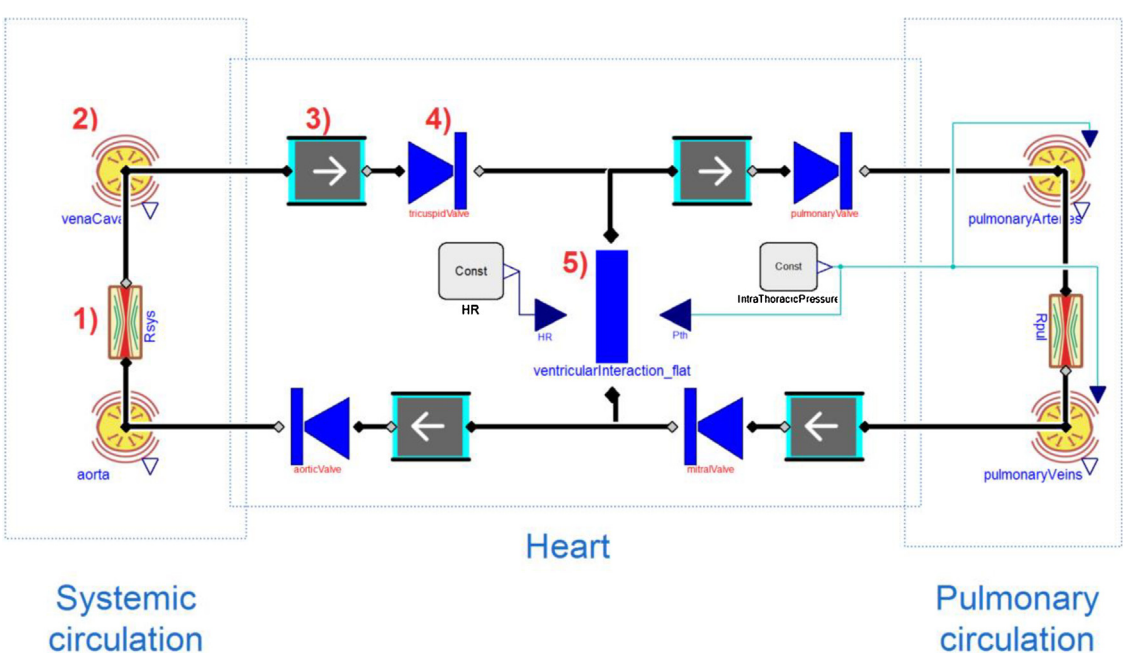

Fig. 3 – The flat Modelica implementation of a model by Smith et al. [20] using hydraulic components of Physiolibrary is resembling a model diagram. Basic component types are numbered: (1) resistance; (2) elastance; (3) inertance; (4) an one-way valve; (5) a custom block for ventricles with septal interaction. Model decomposition is illustrated with dotted rectangles.

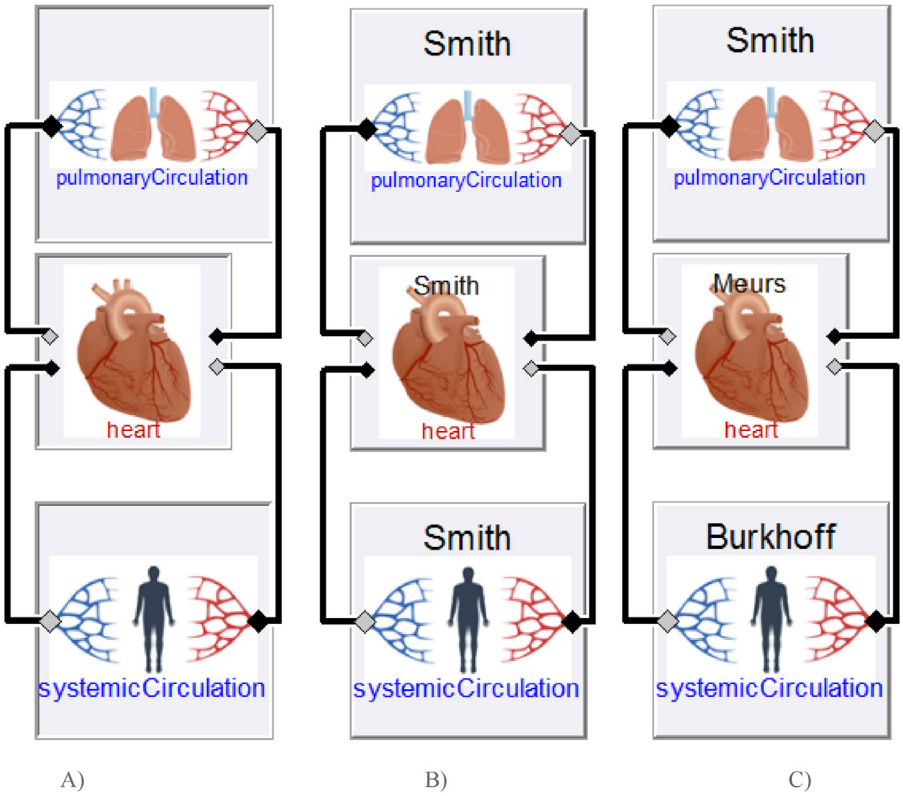

Fig. 4 – System decomposition architecture. (A) Shows general abstract architecture. (B) Usage of blocks from a single model. (C) Combination of models, each part of the model consists of a different model.

are able to comprise any number of signals. As a result, all components have access to any output connected to the expandable connector, but exactly one component must provide the output (i.e. more consumers are connected to one signal producer).

This requires slight modification of the subsystems implementation. On the other hand, it keeps the model of regulatory systems clear and concise. In these examples, the introduced changes basically consist of switching constants for inputs from the expandable connectors. The sample usage could be seen in Fig. 5, where two regulation subsystems are connected to the main circulatory loop.

3. Results and discussion

3.1. *Implemented models*

As a result of the methodology above, we present the implementation of a variety of simple pulsatile[1] cardiovascular models: Burkhoff [22], Smith [20], van Meurs [23], and de

[1] Simple non-pulsating model (the Circulatory subsystem from Guyton–Coleman–Granger model [3]) can be found e.g. in Physiolibrary as an example. However, mixing pulsatile and non-pulsatile parts is not recommended, thus we included only pulsatile models in our set.

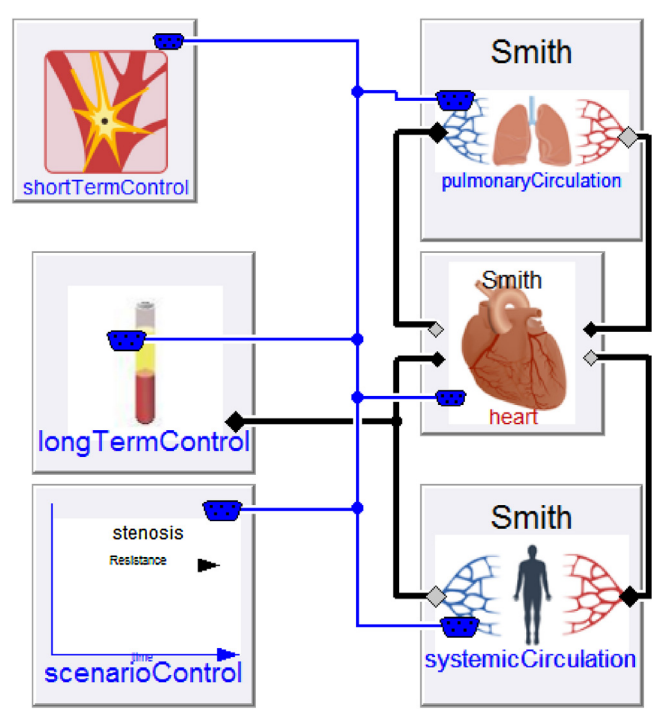

Fig. 5 – System decomposition architecture for a controlled model. The blue line represents an expandable set of signal connections, acting like a signal bus.

Canete [16], then the same models with additional regulations and as a member of complex integrative model, we present Kalecký's [1] elaborate synthesis of a number of models (the heart, the arterial tree, valves, coronary arteries) as the Complex model. Due to the presented methodology, we can easily compare and interchange elements between described models, even though the complexity varies from simple models to a very complex one.

3.2. *Simple cardiovascular models*

Each of the models has been designed for a different usage – the model produced by Burkhoff et al. [22] was used to understand the mechanism of heart disease in pathophysiology, artificial life support and as a tool of education using an interactive educational book together with a software simulator PVLoops. The model by Smith et al. [20] was designed to be easily used for calibrating model parameters to support patient-specific treatment. The model by van Meurs et al. [23] was developed for similar use cases for understanding progression of some diseases and for educational purposes. It is implemented as part of the Human Patient Simulator (HPS) and derived products [23]. de Canete [16] presents very similar model to Smith's, but without the ventricular interactions.

Beginning with systemic circulation, one model has a single hydraulic conductor and double elastances (*Smith*); one has four conductances and three elastances (*Burkhoff*), and another has five conductances, five elastances and an inertia element (*Meurs*). *Smith* does not employ atria; therefore, the contribution of the atrial systole to the ventricular volume is missing. The pulsatile part of the model of Meurs et al. presumes a linear end-systolic and end-diastolic pressure volume relationship and a smooth transition between them for atrial elastance. Burkhof et al. modeled the end-diastolic pressure-volume relationship as non-linear, limited by peak isovolumetric pressure. The variable elastance in the model of Smith et al. is modeled similarly to *Burkhof* with a non-linear end-diastolic pressure–volume relationship.

As the model details are described thoroughly in the original articles and the implementation is self-documented by the source code in the Appendix, we would not go into further description of the models.

3.3. *Controlled systems*

Due to the decomposed structure, it is quite easy to enhance systems by a number of regulations, namely baroreflex, plasma volume and scenario control. We implemented blood volume control (long-time pressure regulation) and baroreflex (short time pressure regulation), with only slight changes to the original implementation. The only factors that must be fulfilled are the dependencies between the control mechanism and the hemodynamic implementation. Some constants have to be redirected as inputs in original models, therefore they are not fully interchangeable with the original implementations.

The plasma volume control, which is modeled using osmotic domain components of Physiolibrary, is an integration of several models published in the literature. Some of the parameters were only estimated to maintain the homeostatic balance in the initial state. The production of red-blood-cells is modeled with respect to the influence of erythropoietin, based on a rough estimation of the partial pressure of oxygen from hematocrit. Together, they form the blood volume control. In the implementation of baroreflex, the short-term mechanism published by Mitamura et al. [24] regulates the heart rate, systemic resistance, ventricular and vena cava elastance.

A scenario is an individual component which can be either modeled directly in a modeling language as presented or it can be triggered externally by a general programming language or user inputs. The model of aortic stenosis scenario changes the resistance quantity from an initial value to a specified final value. This signal is transferred via the bus connector to the appropriate effector component in the cardiovascular system model implementation. The *scenario of hemorrhage* changes the value of the volume flow rate of the hemorrhage pump in the model of blood. The presented scenario is only an example of usage; scenarios can be easily extended (but not limited) by stenosis and insufficiencies of individual valves and cardiac insufficiency of left or right ventricle. By centralizing the scenario, the model itself serves as a demonstrational tool.

3.4. *The Complex model*

The presented model has been described in detail in [1], and its sources are available in Appendix. Based on presented methodology, the equation- and component-based hierarchical model could be run with a combination of the segments.

The main motivation was to study complex interactions between the cardiac circulation system with an emphasis on left ventricle mechanics and systemic arterial tree hemodynamics. The aim of the original study was an analysis of heart in dependence on an applied pulsatile heart support, notably IABP and pulsatile VA ECMO (veno-arterial extracorporeal membrane oxygenation).

The model comprises pulsatile three-segment heart, which includes sarcomere mechanics and coronary circulation, valves dynamics, adaptive vessels and a set of interchangeable arteries from simple Windkessel model to Systemic arterial tree of 128 segments. The model can mimic several common pathologies, e.g. cardiac ischemia, and arterial stenosis. Standard hemodynamic variables are monitored within the circuit. The variables include pressure and flow waveforms, the length of sarcomeres and myofiber stress in the left ventricle and furthermore, an index related to the heart's work and power.

3.4.1. *Heart mechanics*

Lumens et al. [25] have constructed a model of the ventricular hemodynamics and sarcomere mechanics, in which the left and right ventricles are created by an exact of three spherical heart walls (left free wall, right free wall, and septal wall).

Heart atria follow the identical concept of sarcomere mechanics; only their geometry is simplified as an ideal sphere. The model also incorporates parameters of a delay in chamber activation concerning the cardiac cycle, simulating physiological (or pathological) delays in transmission of neural signals along the heart tissue.

For the coronary circuit, a model by Bovendeerd et al. [26] has been implemented. It has been selected for following the

physiological properties of the coronary flow wave, e.g. a generally higher flow during heart diastole than it is during systole, thanks to the elastic compartment. Valves are adopted from Mynard et al. [27] for their realistic simulation of closing and opening times. As a result, valve pathologies can be easily simulated.

3.4.2. *Vessels*

Closed-loop systemic and pulmonary circuits are modeled according to CircAdapt [28]. Stiffness of vessels reflects their non-linear nature, and furthermore, the whole circuit contains adaptation rules, which can simulate organ adaptation to chronic conditions. Simultaneously, the circuit remains lumped and is of a reasonably low complexity. Both systemic and pulmonary circuits consist of three parts – a vessel block for arteries, a controlled resistor for capillaries, and another vessel block for veins. Subsequently, additional variations of the arterial segment have been implemented, including the *Complex Arterial Tree*, a 128-segmental model derived from Avolio [29]. The original model is directly based on physiological dimensions and has been well explained and validated and it is regarded as one of the most realistic lumped arterial models [30].

3.4.3. *Heart support*

To study the effect of the mechanical heart support, the intra-aortic balloon pump (IABP) has been implemented according to Schampaert et al. [31]. To study optimal timings, the time points of inflation and deflation phases can be set with respect to the phase of the cardiac cycle.

The model of the pulsatile extra-corporeal membrane oxygenation (ECMO) is attached to the cardiovascular circuit in the veno-arterial mode. The model can produce a continuous as well as pulsatile flow to study effects on general circulation.

3.4.4. *The whole model*

The schematics of the whole model can be seen in Fig. 6. Here we use a special component for tuning the settings without actually modifying the model structure, which speeds up the comparison of different model setting. When using parts of this model with the simple circulatory parts mentioned above, the *EnvironmentSettings* block must be present on the scene.

3.5. *Simulation results*

One illustrative cardiac cycle of each of the three simple uncontrolled cardiovascular models mentioned above

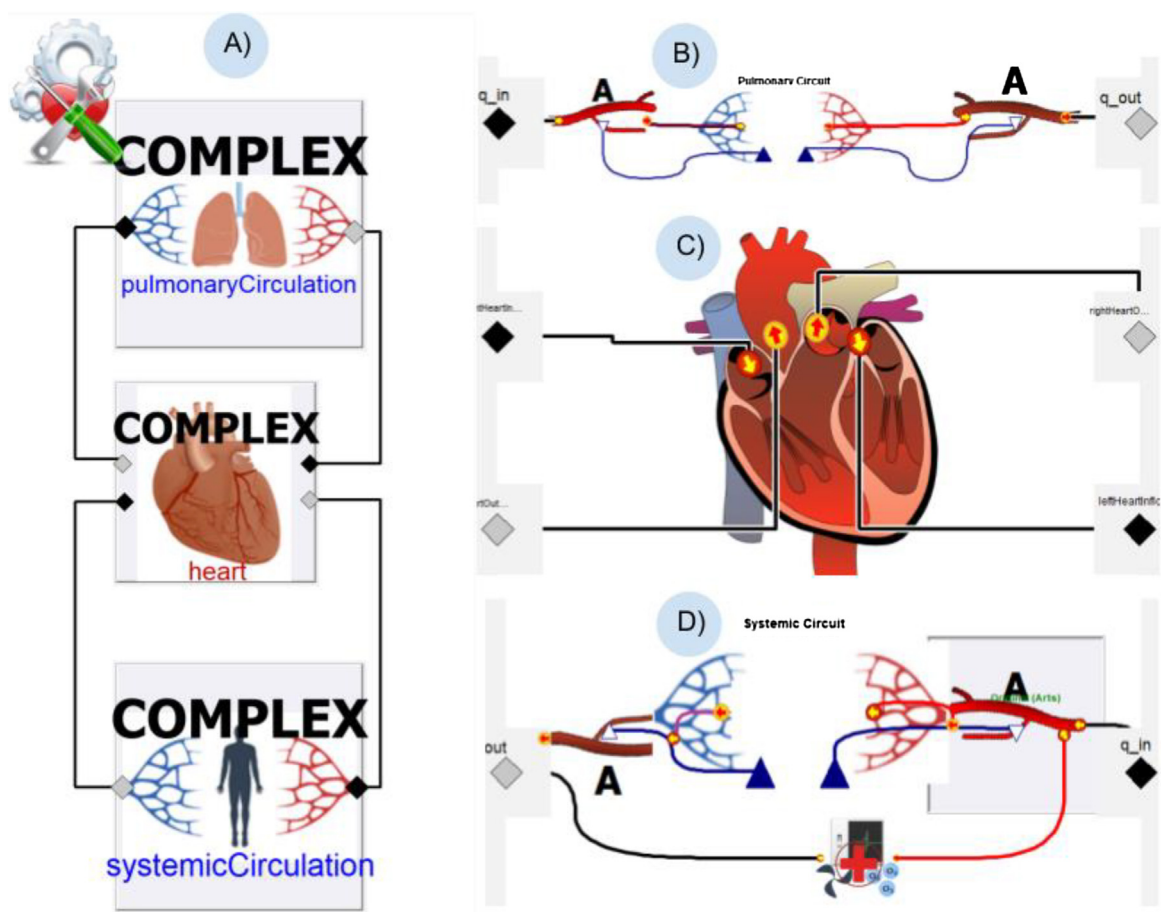

Fig. 6 – The whole diagram of the Complex model. (A) The overall schematics of the decomposed model, (B) detail of pulmonary circulation, (C) detail of heart, and (D) detail of systemic circulation – note the ECMO, connected in series. The submodel with EnvironmentSettings at the top level allows changes e.g. setting of initial parameters or activation of ECMO or IABP without other physical modification of the model.

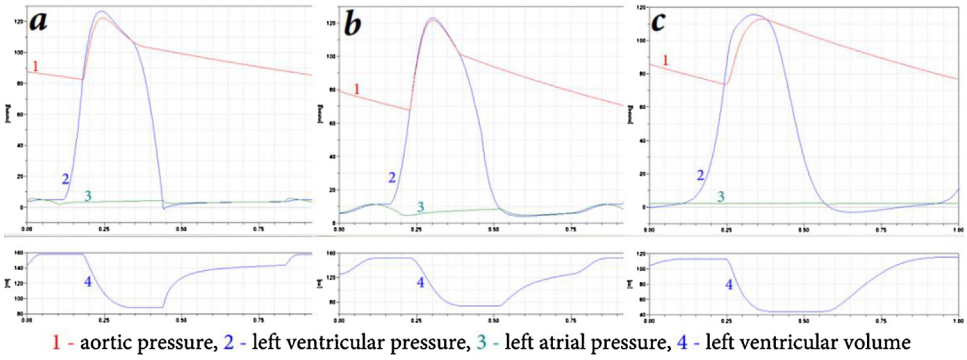

Fig. 7 – Pressure in the left atrium, the left ventricle, the aorta and the volume of the ventricle during one cardiac cycle in normal conditions. (a) Meurs model; (b) Burkhoff model; (c) Smith model.

in steady state are visualized in Fig. 7. The results agree well with the source models and with the physiological literature. The example results of the bleeding scenario are in Fig. 8.

The result of the Complex Model with *Complex Arterial Tree* are illustrative physiological arterial pressure waveforms shown in Fig. 9A. The results correspond well to our physiological knowledge. The Complex Model is capable of employing experimental pulsatile VA ECMO, which could support the recovery of the heart, possibly also because of higher flow through coronary arteries (see Fig. 9B). The effects of the VA ECMO depends both on the cannula placement and pulsatility mode (Fig. 9C). The overall results indicate better performance of pulsatile VA ECMO on the circulatory system, which is in correspondence with the latest research [32].

Complex integrative models have different validation criteria and are not used for predicting exact response

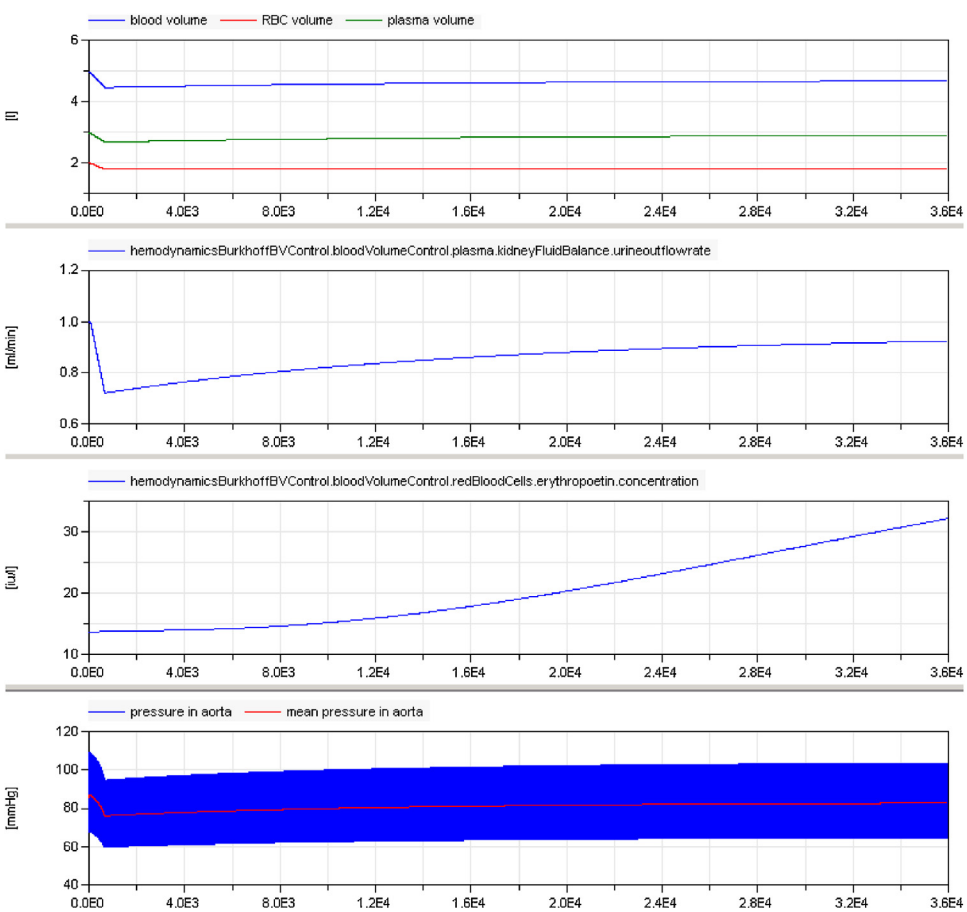

Fig. 8 – The simulation of blood loss and compensation for that loss over 10 h. The bleeding occurred at the simulation time of 10 min; the total loss of volume was 500 ml. The plasma volume was compensated for within several hours. Red blood cell production was increased by erythropoietin, but the reproduction increase was not significant within the simulation time of 10 h.

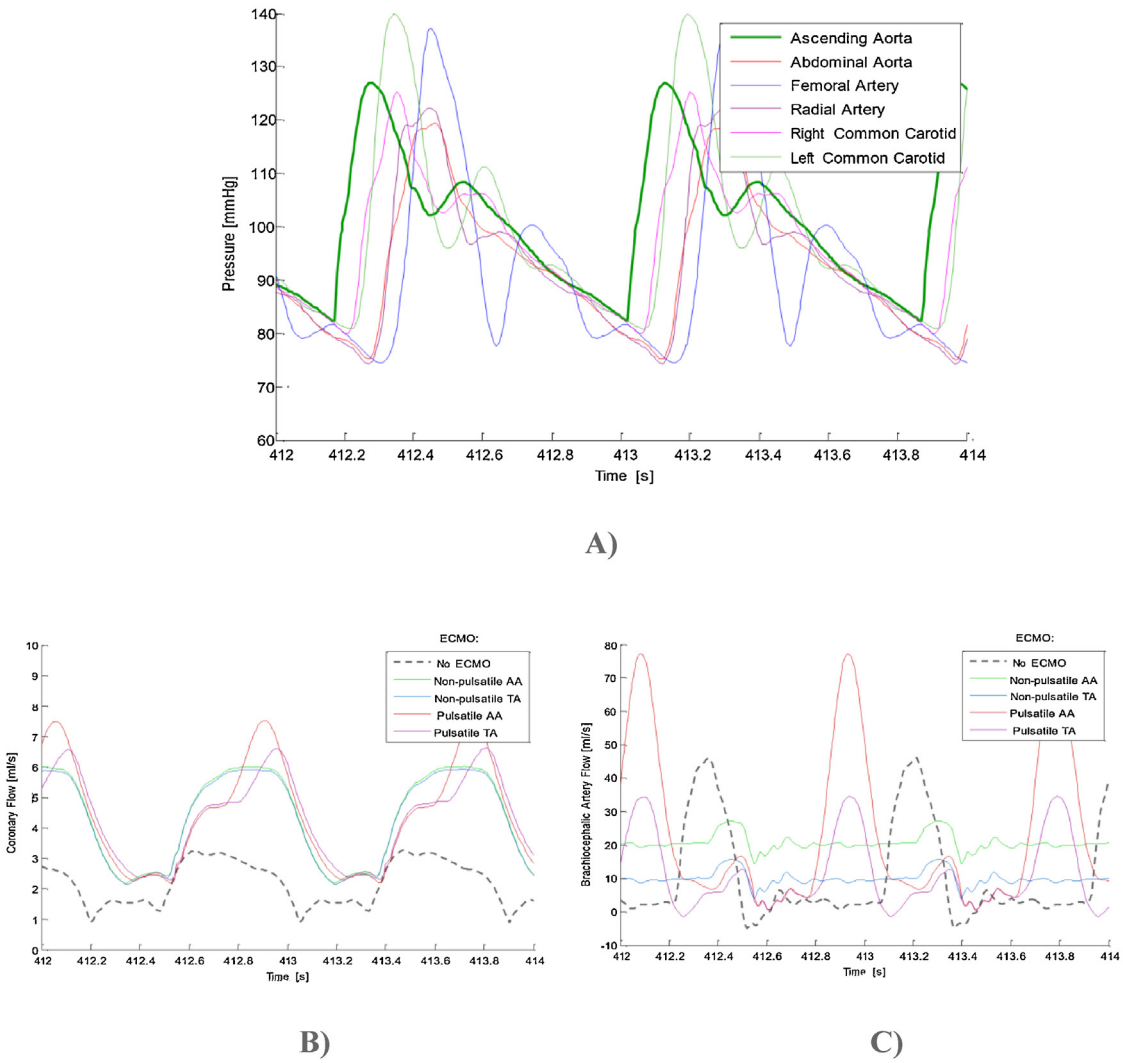

Fig. 9 – (A) Pressure waveforms using the complex model with complex arterial tree in physiological conditions. Note a small notch caused by the closure of the aortic valve, located slightly below 110 mmHg, and a more apparent dicrotic notch caused by a wave reflection from distant parts of the tree. (B and C) The flow through example arteries, depending on ECMO pulsatility and placement (AA – ascending aorta, TA – thoracic aorta). (B) The coronary arteries, the flow is substantially elevated regardless of the mean of employing ECMO. (C) Brachiocephalic artery, the flow is significantly improved only for connection to ascending aorta. Plugging into thoracic aorta results in the significantly decreased flow, for both pulsatile and non-pulsatile ECMO modes.

of specific patient, its usage is rather investigative and demonstrative. The validity criterion is in observing the model response on various simulated stimuli. Model reaction on known simulated pathologies should agree with clinically known pathogenesis of simulated state. The presented complex model fulfills those requirements (see sample output in Fig. 9).

3.6. *Model complexity and simulation time*

The complex model with complex arterial tree, IABP and ECMO enabled, has altogether 3991 equations, 2641 of them are non-trivial (not a simple $a = b$ assignment), the rest is generally the overhead. After translation and symbolic optimization, the resulting model used for simulation has 1455 time-varying variables and 443 state variables. Simple models have significantly less equations, hierarchically shallow model implementations (as seen in Fig. 3) have even a few equations less, but after translation the number should be same or similar.

The better model detail, the longer computation time. The simulation time varied significantly between individual models. The simulation time has been measured within Dymola 2016 environment, running on a Windows 10 64b reference machine with Intel i7-3667U CPU @ 2.0 GHz. We considered the simulation time only, some overhead with model translation and compiling was ignored. Target simulation time was ten minutes (600 s), with 5000 output intervals, with DASSL solver and tolerance 10^{-4}. Surprisingly, the shallow implementations had slightly shorter simulation time

Table 1 – Simulation time and numbers of equations of simple models.

	Meurs	*Burkhof*	*Smith*
Shallow	2.9 s/250 eqs.	3.6 s/284 eqs.	8.5 s/142 eqs.
Hierarchic	3.5 s/257 eqs.	4.0 s/304 eqs.	9.9/259 eqs.
Scenario	10 s/751 eqs.	11.6 s/799	24.6 s/779 eqs.

and the computational time did not correlate with number of model equations (Table 1).

The Complex model was simulated for 15 s only, with tolerance 10^{-6} and Sdirk34hw solver. For the full-featured simulation (IABP, ECMO and the most complex arterial tree with 128 elements, 3991 equations), the computation took 193 s. With simpler arteries (only 773 equation in total), the same simulation takes 19 s. The solver choice here had a huge impact on computational time, as this simulation took 115 s with the DASSL solver.

3.7. *Possible model combinations*

Models can be swapped and combined with more or less detailed components, based on desired simulation goals, which would influence overall model details and outputs as well as the computation time.

Fig. 10 shows an overview of possible model combinations and compatibility. Not only we could set up the models of *Smith*, *Burkhoff* or *CircAdapt*, we could introduce the *CircAdapt* heart into otherwise simpler Smith's model or add complex systemic circulation with the *Complex Arterial Tree* to the *Meurs* model, with generally plausible results.

3.8. *User interface*

A cardiovascular model is often accompanied with a simulator (e.g. [33–35]), which presents the resulting waveforms and enables changing pre-defined input parameters or signals. Some simulation environments assist with developing such extensions for the design of the simulators (e.g. [36] in Matlab, [37] in LabView). However, keeping both the model and the simulator compatible may be cumbersome, especially in early development stages. Our approach differs from specialized interface of training simulators though, as we strive to develop an user-friendly model, not a simulator.[2] Simulator has to be changed along with the model, here the user interface is the model itself. It does not offer such level of user-friendliness, but it may be directly manipulated and thus easily extended.

User interface of the proposed model set is provided by the Modelica tool. Modelica language is supported by a number of tools, which provide a range of user interfaces – from textual (JModelica) to comprehensive graphical user interface (e.g. Dymola, SystemModeler). The tool enables modifying parameters or exchanging whole subsystems for compatible ones. Other modeling environments (e.g. Matlab Simulink, VisSim, etc.) offers some user interface, which also allows to manipulate parameters, seldom it offers means to effectively refactor and reuse the models. Less often, the simulation model consists of several interchangeable modules. Our approach allows to make major modifications to the model, yet remain lucid.

Demonstration of the model usage and modifications is presented in the online-only Multimedia Supplement 1.

3.9. *Discussion*

The variability of the methodology allows us to build from very simple to large complex models and to integrate new submodels. Because of the equation-based approach, one submodel is affecting the others. The circulatory system built by using these principles cannot be in any way viewed as a chain reaction, where the signal is transformed from the signal source (heart) to the end (peripheries, or circulatory back to the heart). It rather resembles an electrical circuit, in which changing the last resistor would modify the electrical current from the battery. Under this principle, we can change pulsatile properties of ECMO cannulated in lower thoracic aorta and study differences in the heart stress.

Modern languages, such as SimScape, JSim or VisSim, can also benefit from component- and equation-based subsystems. However, none of them is truly an object oriented language, which is a convenient feature for development of complex models. On the other hand, integration of SimScape to Matlab environment is beneficial for simulation scripting, optimization and post-processing of results.

The main aim of domain-specific modeling languages and standards like JSIM, SBML, CellML are to offer a universal standard for sharing models, independent on a proprietary language or the industrial vendor. However, a major effort is required to maintain the language standard, tools, and repositories. The Modelica language standard is supported by both academic and industrial vendors, not limited by a single domain. Commercial as well as mature open-source Modelica tools can be used to verify model's behavior. The Modelica source code, including visuals, is just a readable plain text, suitable for version control and repositories. Therefore, Modelica can be accepted as a standard for modeling physiology.

Although the Modelica language is standardized, the complex nature of some models cause some Modelica tools do not support them in full, partly due to immaturity, partly due to bugs. But the pressure of the involved industries (mainly automotive and aerospace) ensures, that the Modelica tools are rapidly improving. We believe, that Modelica and related libraries can fill the gap between models of a single specific phenomenon and complex integrative models and that Modelica language can be the language of a future wide public repository of general physiological models.

The presented suite could be never complete, as the needs for modeling are very different, but it should serve as a starting point for modifications and add-ons. Also, the models are not necessarily exactly compatible with each other in the means of same data output, because each model does have different

[2] Nonetheless, from most Modelica tools, the user might export any model combination as the Functional Mockup Interface (FMI). The FMI has been designed for model exchange among tens of other modeling platforms (see [38]). It is then easy to build a simulator with graphical user interface and pre-defined set of changeable parameters and resulting graphs, e.g. using the ModeliChart [39].

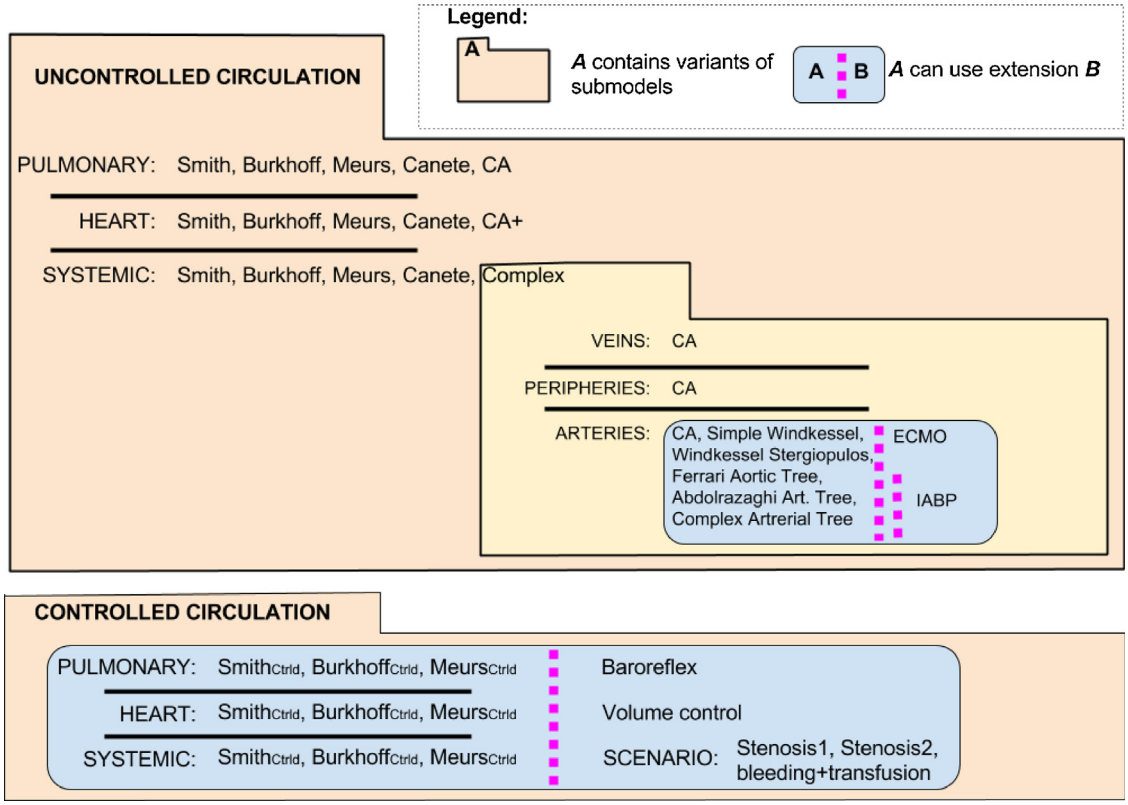

Fig. 10 – The overall diagram of described models, with sketched out-of-the-box compatibility. With minimal effort (exposing appropriate connectors), any extension could be ported to both controlled and uncontrolled circulations. CA – implementation of CircAdapt, CA+ implementation of CircAdapt, enhanced by detailed valves and coronary circulation.

validation data set, human bodies are not all the same. However, the structural validity is maintained and the models should be fine tuned with slight parameter modifications according to the input dataset.

As mentioned above, a set of numerical solvers are available for the simulation. Most universal, the DASSL solver, proved to be unnecessary slow for the Complex model and even unstable for larger tolerances (10^{-5} and larger). This has been solved by using the Sdirk34hw solver, with tolerance at least 10^{-6} to prevent numerical oscillations in the stiff system.

4. Conclusion

We demonstrated that our modeling methodology is robust enough to cover from simple demonstration models to complex research tools and even allows for any combination of the components (theoretically up to 500 combinations).

We have seen, that in contrary to block-based simulation languages, the model structure in Modelica is much more similar to the modeled reality and thus mathematical models are more comprehensible and resistant to mistakes. The object-oriented architecture allows to construct and debug complex hierarchical models, enabling us to reuse and integrate submodels to build customizable models of several scenarios. The language is accompanied by an extensive set of universal libraries of predefined components, notably the Physiolibrary [19], tailored specially for integrative physiology modeling. These advantages, together with non-proprietary license and independence on a single environment or a company, make Modelica a universal language, that could become a norm in integrative modeling.

This modeling option should cover a broad spectrum of modeling needs. The presented model set should serve as a starting workbench for teaching, demonstrational purposes and investigation of body regulations.

We hope that the described methods and published models will lead to greater comprehension, reusability and reproducibility of them in the scientific and educational communities, and will contribute to the current repositories of several Physiome projects in order to build and maintain complex integrative models consisting of several well documented and published submodels.

Supplementary material

Supplementary material 1 contains source code of all presented models in one package. Up to date version could be found on [40]. They are intended to work with Physiolibrary 2.3.1 [19]. The models have been prepared and tested in Dymola 2016 FD01 and OpenModelica 1.12.

Multimedia supplement 1 demonstrates a simple usage of the proposed modeling workbench, both in OpenModelica and in Dymola environments. It is demonstrated how to simulate model, change parameters, add new components, change

parts of the decomposed model and introduce circulation supports, such as ECMO.

Acknowledgements

This work was partially supported by the research grant CESNET 551/2014 and by Creative Connections, s.r.o. We would like to thank to Veronika Sýkorová for careful review.

Appendix A. Supplementary data

Supplementary material related to this article can be found, in the online version, at doi:10.1016/j.bbe.2017.08.001.

REFERENCES

[1] Kalecký K. Relationship of heart's pumping function and pressure-flow patterns in reduced arterial tree. Czech Technical University; 2015.
[2] Cellier FE, Nebot A. Object-oriented modeling in the service of medicine. Proc. 6th Asia simulation conference. 2005. pp. 33–40.
[3] Guyton AC, Coleman TG, Granger HJ. Circulation: overall regulation. Annu Rev Physiol 1972;34:13–46.
[4] Kofránek J, Rusz J. Restoration of Guyton's diagram for regulation of the circulation as a basis for quantitative physiological model development. Physiol Res 2010.
[5] Hester RL, Brown AJ, Husband L, Iliescu R, Pruett D, Summers R, et al. HumMod: a modeling environment for the simulation of integrative human physiology. Front Physiol 2011;2:12.
[6] Hucka M, Finney A, Bornstein BJ, Keating SM, Shapiro BE, Matthews J, et al. Evolving a lingua franca and associated software infrastructure for computational systems biology: the Systems Biology Markup Language (SBML) project. Syst Biol 2004;1:41–53.
[7] Lloyd CM, Lawson JR, Hunter PJ, Nielsen PF. The CellML model repository. Bioinformatics 2008;24:2122–3.
[8] Raymond GM, Butterworth E, Bassingthwaighte JB. JSIM: free software package for teaching physiological modeling and research. FASEB J 2003;17:A390.
[9] Fontecave-Jallon J, Thomas SR. Implementation of a model of bodily fluids regulation. Acta Biotheor 2015;63:269–82.
[10] Brunberg A, Spillner J, Autschbach R, Abel D. Simulation physiologischer Regelkreise mit der objektorientierten Modellbibliothek "HumanLib". Automatisierungstechnik 2011;59:649–55.
[11] de Canete JF, Luque J, Barbancho J, Munoz V. Modelling of long-term and short-term mechanisms of arterial pressure control in the cardiovascular system: an object-oriented approach. Comput Biol Med 2014;47:104–12.
[12] Kulhánek T, Kofránek J, Mateják M. Modeling of short-term mechanism of arterial pressure control in the cardiovascular system: object-oriented and acausal approach. Comput Biol Med 2014;54:137–44.
[13] Mateják M, Kofránek J. Physiomodel – an integrative physiology in Modelica. 2015 37th annual international conference of the IEEE Engineering in Medicine and Biology Society (EMBC). 2015. pp. 1464–7.
[14] Kretschmer J, Wahl A, Möller K. Dynamically generated models for medical decision support systems. Comput Biol Med 2011;41:899–907.
[15] Kofránek J, Mateják M, Privitzer P, Tribula M. Causal or acausal modeling: labour for humans or labour for machines. Tech Comput Prague 2008;1–16.
[16] de Canete JF, del Saz-Orozco P, Moreno-Boza D, Duran-Venegas E. Object-oriented modeling and simulation of the closed loop cardiovascular system by using SIMSCAPE. Comput Biol Med 2013;43:323–33.
[17] Fritzson P. Principles of object-oriented modeling and simulation with Modelica 3.3: a cyber-physical approach. John Wiley & Sons; 2015.
[18] Petzold LR, et al. A description of DASSL: a differential/algebraic system solver. Proc. IMACS world congress. 1982. pp. 430–2.
[19] Mateják M, Kulhánek T, Šilar J, Privitzer P, Ježek F, Kofránek J. Physiolibrary – Modelica library for physiology. 10th International Modelica conference; 2014.
[20] Smith BW, Chase JG, Nokes RI, Shaw GM, Wake G. Minimal haemodynamic system model including ventricular interaction and valve dynamics. Med Eng Phys 2004;26:131–9.
[21] Hernández AI, Le Rolle V, Ojeda D, Baconnier P, Fontecave-Jallon J, Guillaud F, et al. Integration of detailed modules in a core model of body fluid homeostasis and blood pressure regulation. Prog Biophys Mol Biol 2011;107:169–82.
[22] Burkhoff D, Tyberg JV. Why does pulmonary venous pressure rise after onset of LV dysfunction: a theoretical analysis. Am J Physiol 1993;265:H1819–28.
[23] van Meurs W. Modeling and simulation in biomedical engineering: applications in cardiorespiratory physiology. 1st ed. McGraw-Hill Education; 2011.
[24] Mitamura Y. Control aspects of the circulatory system. IFAC control aspects of biomedical engineering; 1987.
[25] Lumens J, Delhaas T, Kirn B, Arts T. Three-wall segment (TriSeg) model describing mechanics and hemodynamics of ventricular interaction. Ann Biomed Eng 2009;37:2234–55.
[26] Bovendeerd PHM, Borsje P, Arts T, van De Vosse FN. Dependence of intramyocardial pressure and coronary flow on ventricular loading and contractility: a model study. Ann Biomed Eng 2006;34:1833–45.
[27] Mynard JP, Davidson MR, Penny DJ, Smolich JJ. A simple, versatile valve model for use in lumped parameter and one-dimensional cardiovascular models. Int J Numer Methods Biomed Eng 2012;28:626–41.
[28] Department of Biomedical Engineering, Maastricht University. Downloads – CircAdapt | learning cardiovascular physiology. CircAdapt: Advanced Cardiovascular Modeling and Simulation 2013. http://www.circadapt.org/downloads [accessed 25.02.16].
[29] Avolio AP. Multi-branched model of the human arterial system. Med Biol Eng Comput 1980;18:709–18.
[30] Shi Y, Lawford P, Hose R. Review of Zero-D and 1-D models of blood flow in the cardiovascular system. Biomed Eng 2011;10:1–38.
[31] Schampaert S, Rutten MCM, van T Veer M, van Nunen LX, Tonino PAL, Pijls NHJ, et al. Modeling the interaction between the intra-aortic balloon pump and the cardiovascular system: the effect of timing. ASAIO J 2013;59:30–6.
[32] Itoh H, Ichiba S, Ujike Y, Douguchi T, Obata H, Inamori S, et al. Effect of the pulsatile extracorporeal membrane oxygenation on hemodynamic energy and systemic microcirculation in a piglet model of acute cardiac failure. Artif Organs 2016;40:19–26.
[33] Heldt T, Mukkamala R, Moody GB, Mark RG. CVSim: an open-source cardiovascular simulator for teaching and research. Open Pacing Electrophysiol Ther J 2010;3:45–54.

[34] Ntaganda JM, Mampassi B. CARDIOGUI: an interface guide to simulate cardiovascular respiratory system during physical activity. AM 2012;03:2000–6.
[35] PVLoops LLC n.d. http://www.pvloops.com/ [accessed 22.08.16].
[36] Zhang S. An IIOP architecture for Web-enabled physiological models. Massachusetts Institute of Technology; 2001.
[37] Fresiello L, Ferrari G, Di Molfetta A, Zieliński K, Tzallas A, Jacobs S, et al. A cardiovascular simulator tailored for training and clinical uses. J Biomed Inform 2015;57:100–12.
[38] Modelica Association. Tools | Functional Mock-up Interface; 2017, http://fmi-standard.org/tools/ [accessed 21.07.17].
[39] Gesenhues J, Hein M, Ketelhut M, Habigt M, Rüschen D, Mechelinck M, et al. Benefits of object-oriented models and ModeliChart: modern tools and methods for the interdisciplinary research on smart biomedical technology. Biomed Tech 2017;62:111–21.
[40] Ježek F. Physiolibrary models. GitHub n.d. https://github.com/filip-jezek/Physiolibrary.models [accessed 20.07.17].