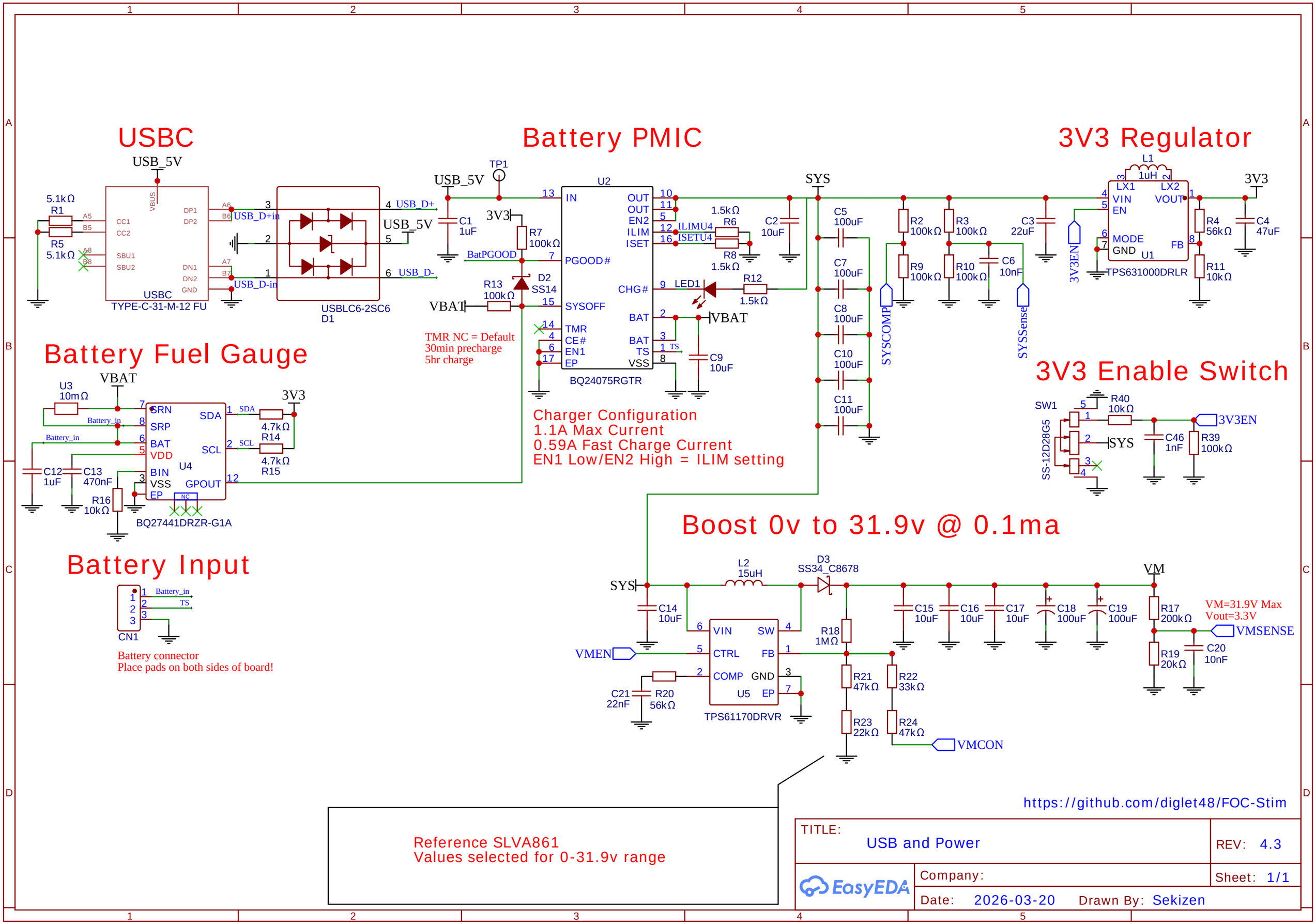
USBC
USB_5V
5.1kΩ
R1
R5
5.1kΩ
CC1
CC2
SBU1
SBU2
VBUS
DP1
DP2
DN1
DN2
GND
USBC
TYPE-C-31-M-12 FU
USB_D+in
USB_D-in
USBLC6-2SC6
D1
USB_D+
USB_D-
Battery PMIC
TP1
C1
1uF
3V3
R7
100kΩ
BatPGOOD
D2
SS14
R13
100kΩ
VBAT
U2
IN
PGOOD#
SYSOFF
TMR
CE#
EN1
EP
OUT
EN2
ILIM
ISET
CHG#
BAT
TS
VSS
ILIMU4
ISETU4
R6
R8
1.5kΩ
LED1
R12
C2
10uF
C9
10uF
BQ24075RGTR
TMR NC = Default
30min precharge
5hr charge
Charger Configuration
1.1A Max Current
0.59A Fast Charge Current
EN1 Low/EN2 High = ILIM setting
SYS
C5
100uF
C7
100uF
C8
100uF
C10
100uF
C11
100uF
SYSCOMP
R2
100kΩ
R9
100kΩ
R3
100kΩ
R10
100kΩ
C6
10nF
SYSSense
C3
22uF
3V3EN
3V3 Regulator
L1
1uH
LX1
LX2
VIN
EN
VOUT
MODE
GND
FB
U1
TPS631000DRLR
R4
56kΩ
R11
10kΩ
C4
47uF
3V3
Battery Fuel Gauge
U3
10mΩ
VBAT
Battery_in
SRN
SRP
BAT
VDD
BIN
VSS
EP
SDA
SCL
GPOUT
U4
NC
BQ27441DRZR-G1A
SDA
SCL
4.7kΩ
R14
4.7kΩ
R15
C12
1uF
C13
470nF
R16
10kΩ
3V3 Enable Switch
SW1
SS-12D28G5
R40
10kΩ
3V3EN
SYS
C46
1nF
R39
100kΩ
Battery Input
CN1
Battery_in
TS
Battery connector
Place pads on both sides of board!
Boost 0v to 31.9v @ 0.1ma
SYS
L2
15uH
D3
SS34_C8678
C14
10uF
VMEN
VIN
CTRL
COMP
U5
SW
FB
GND
EP
TPS61170DRVR
C21
22nF
R20
56kΩ
R18
1MΩ
R21
47kΩ
R22
33kΩ
R23
22kΩ
R24
47kΩ
VMCON
C15
10uF
C16
10uF
C17
10uF
C18
100uF
C19
100uF
VM
R17
200kΩ
R19
20kΩ
C20
10nF
VM=31.9V Max
Vout=3.3V
VMSENSE
Reference SLVA861
Values selected for 0-31.9v range
https://github.com/diglet48/FOC-Stim
TITLE:
USB and Power
REV: 4.3
Company:
Sheet: 1/1
Date: 2026-03-20
Drawn By: Sekizen
EasyEDA

ESP32 MCU

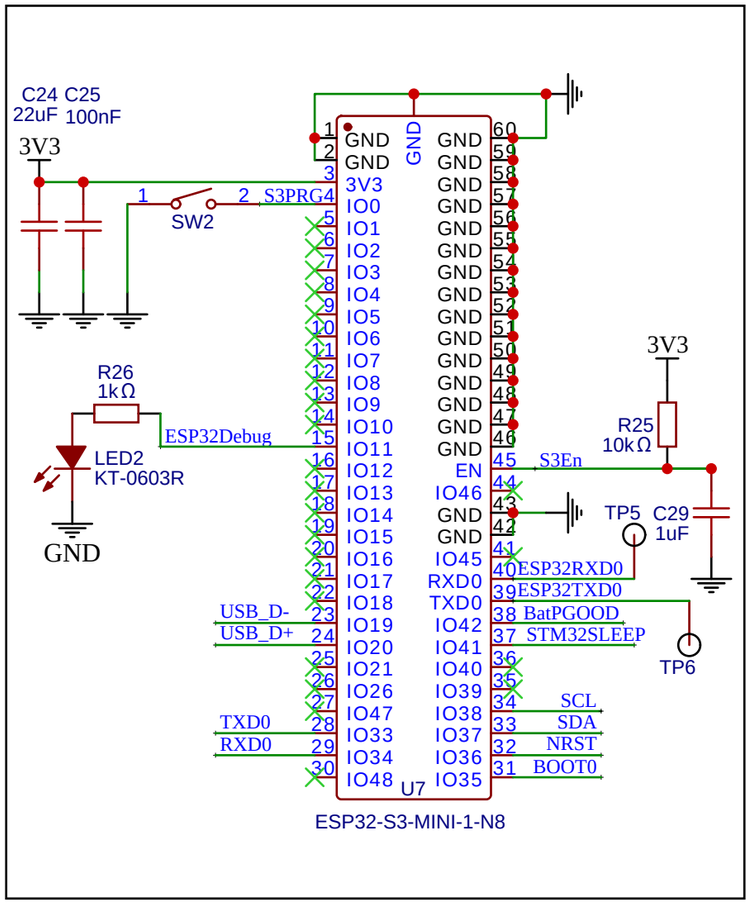

STM32 MCU

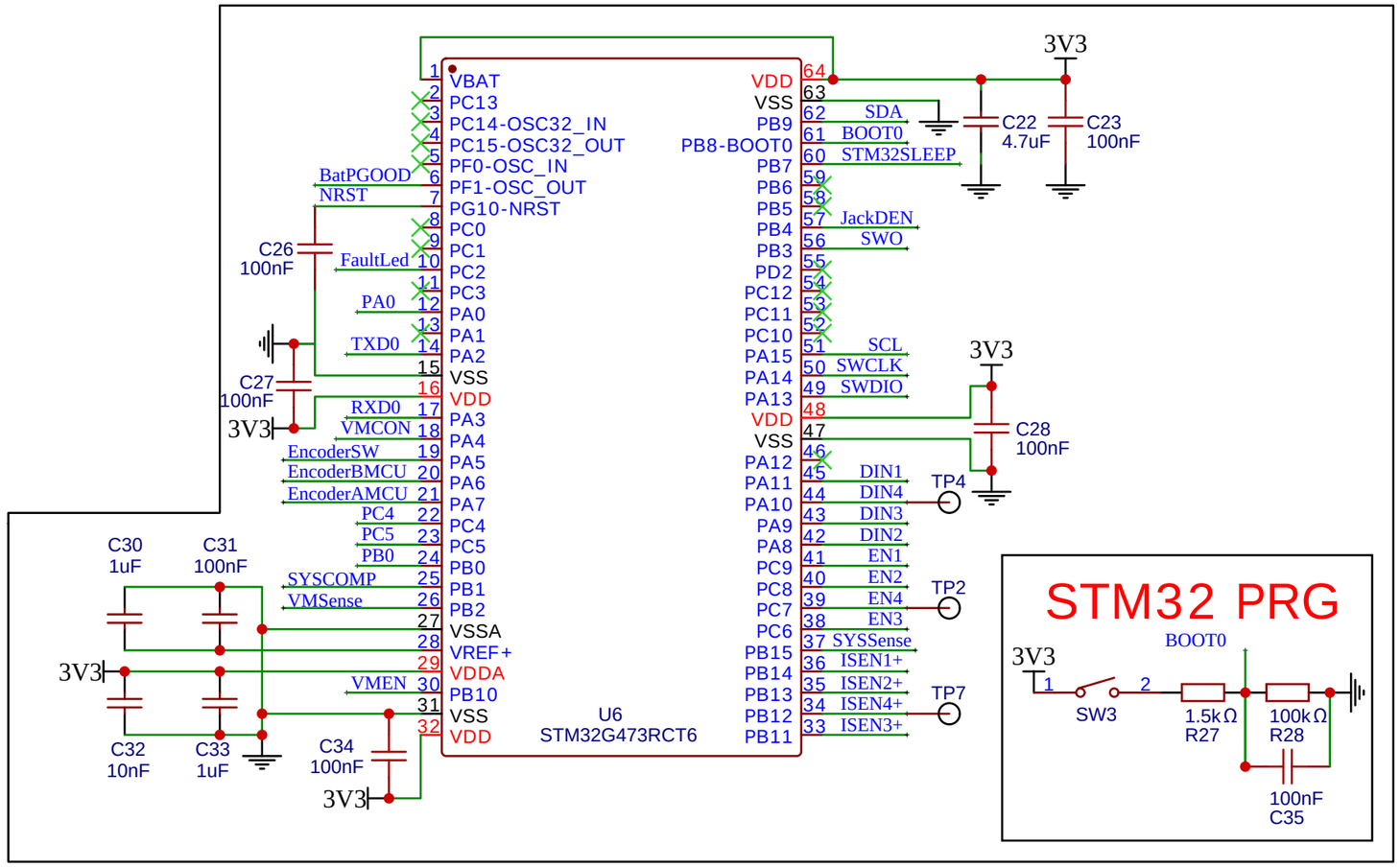

IMU

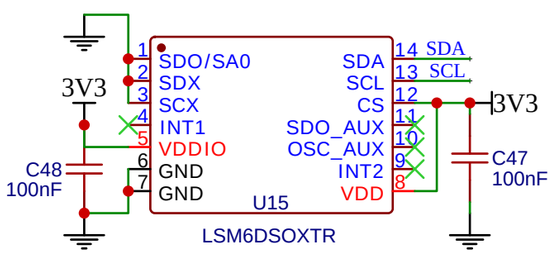

Expander

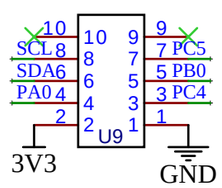

Encoder Filter

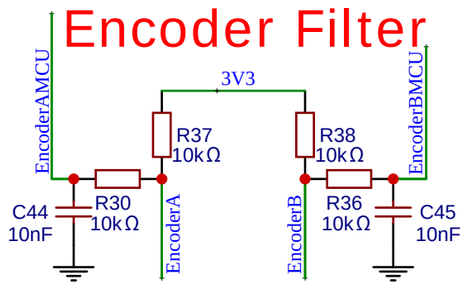

B-2-B

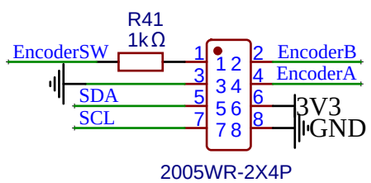

LED

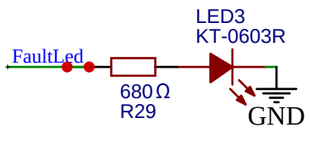

JTAG

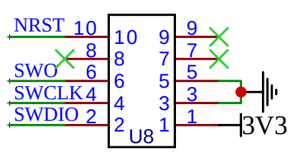

https://github.com/diglet48/FOC-Stim

ESP32 based on
https://docs.espressif.com/projects/esp-dev-kits/en/latest/esp32s3/esp32-s3-usb-bridge/index.html

TITLE: MCU and ACC	REV: 4.3
EasyEDA Company:	Sheet: 1/1
Date: 2026-03-20 Drawn By: Sekizen	

Driver ICs

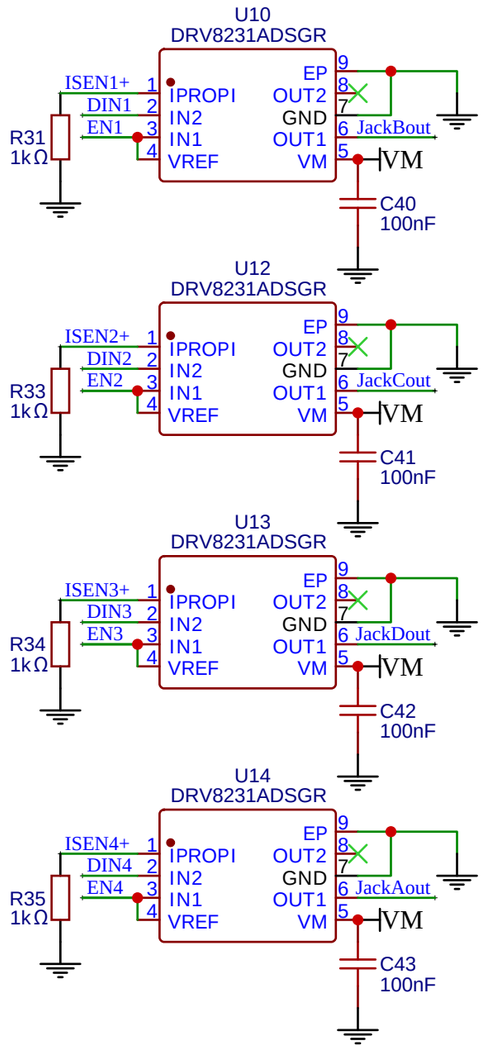

Output Stage Low Pass Filter

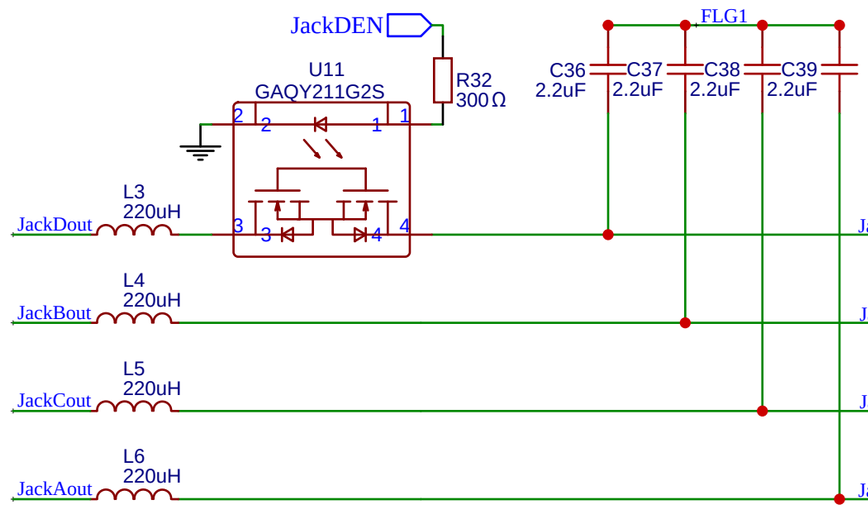

Transformer Output Stage

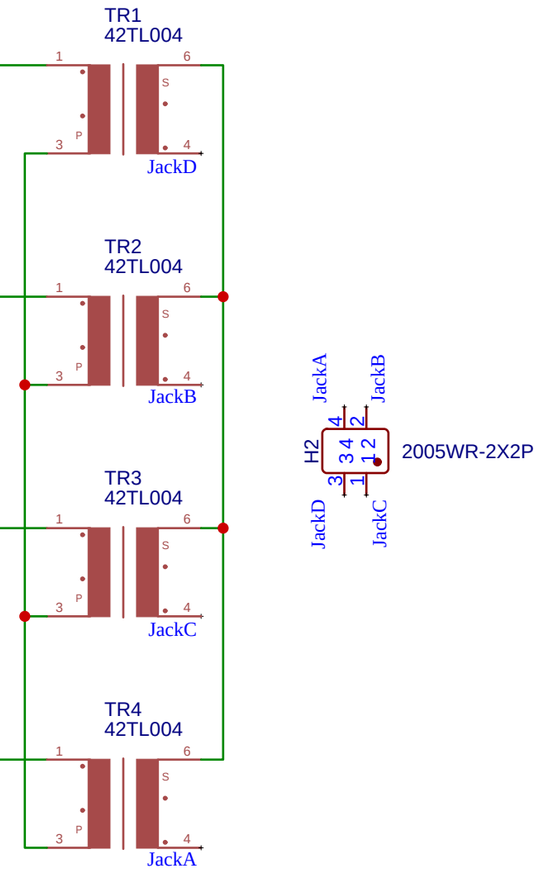

USE ONLY 42TL004

https://github.com/diglet48/FOC-Stim

TITLE: Driver/Output		REV: 4.3
EasyEDA	Company:	Sheet: 1/1
	Date: 2026-03-20	Drawn By: Sekizen