KlisterFixer Applicator

Molly More, Aiden Bunas, Dinuka Hannadige, Cooper Smith, and **Kristina Morgunova**

GEEN 2400-10 – Engineering Projects for the Community (Dr. Iribagiza)

How can we make ski waxing for the CU Nordic Ski Club safer and cleaner by improving their klister application process?

Our Client

The **CU Boulder Nordic Ski Club** is an all-inclusive student organization welcoming skiers of every level — from first-timers to competitive racers. The club builds community through day trips, overnight trips, and competitions.

Their Problem

Klister wax is essential for grip in icy and slushy cross-country ski conditions, but applying it is messy, slow, and inconsistent. There is no tool designed for real-world outdoor use with gloves in cold weather.

1. Contaminated hands, clothes, and gear
2. No temperature control in freezing conditions
3. 15–30 min application time per person
4. Uneven coverage degrades ski performance
5. Cannot use with gloves on

Design Requirements

- Application time < 10 minutes
- Klister temp of 35–40°C
- Total materials cost under $100
- Limited hand contact with klister
- Operable with standard ski gloves
- Even wax coverage

Acknowledgments

We would like to thank **Nora Spicher**, **Lauren Darling**, **Lia Cucuzzella**, **Kat Penzkover**, **Dr. Iribagiza**, **Jessica Cavarra**, and **Natasha Buraszeski** for their assistance with the KlisterFixer project.

Our Solution

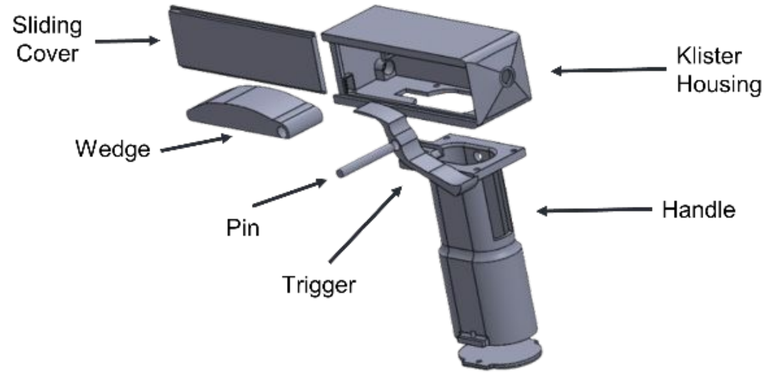

Block Diagram

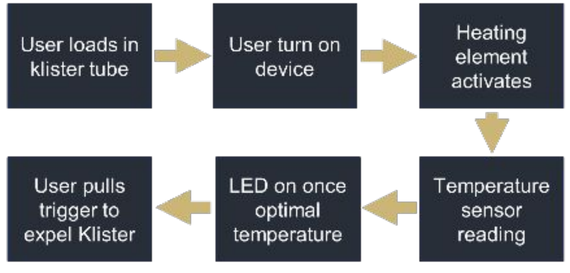

Circuit Diagram

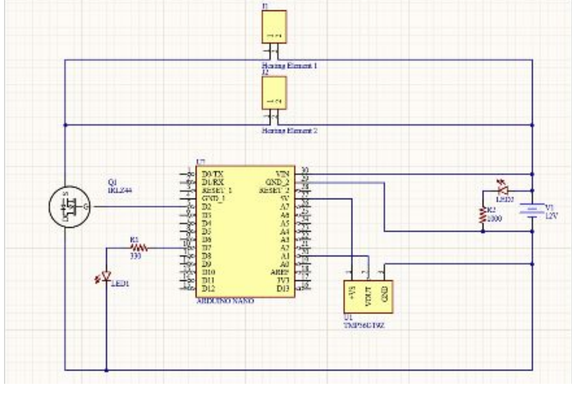

Solution Analysis

Criterion	KlisterFixer	Direct from Tube
Safety of Heating	✓	✗
Cleanliness	✓	✗
Ease of Setup	✗	✓
Beginner Friendliness	✓	✗
Control	✓	✗
Size / Profile	✗	✓
Total	**4**	**2**

Prototype Bill of Materials

Component	Est. Cost
3D-Printed Housing	$ 20.22
Arduino Nano	$ 7.99
PCB	$ 10.24
Resistive Heating Elements	$ 12.00
LiPo Battery + Charger	$ 32.00
Electronic Components	$ 6.00
Total	**$ 88.45**

Heating Element Analysis

I=V/R
P=IV

Max voltage drop across heating element: **11.3 V**
Resistance of heating pad **~10 Ω**
Current Draw: **1.13 A**
Power Dissipated: **12.8 W**

For **1 hour** of use, need at least a **1500 mAH** battery

Future Work

The next steps for the KlisterFixer involve:

- Trigger and handle redesign for improved ergonomics and function
- Complete snow and weather-proofing of electronics
- Optimize design for manufacturability