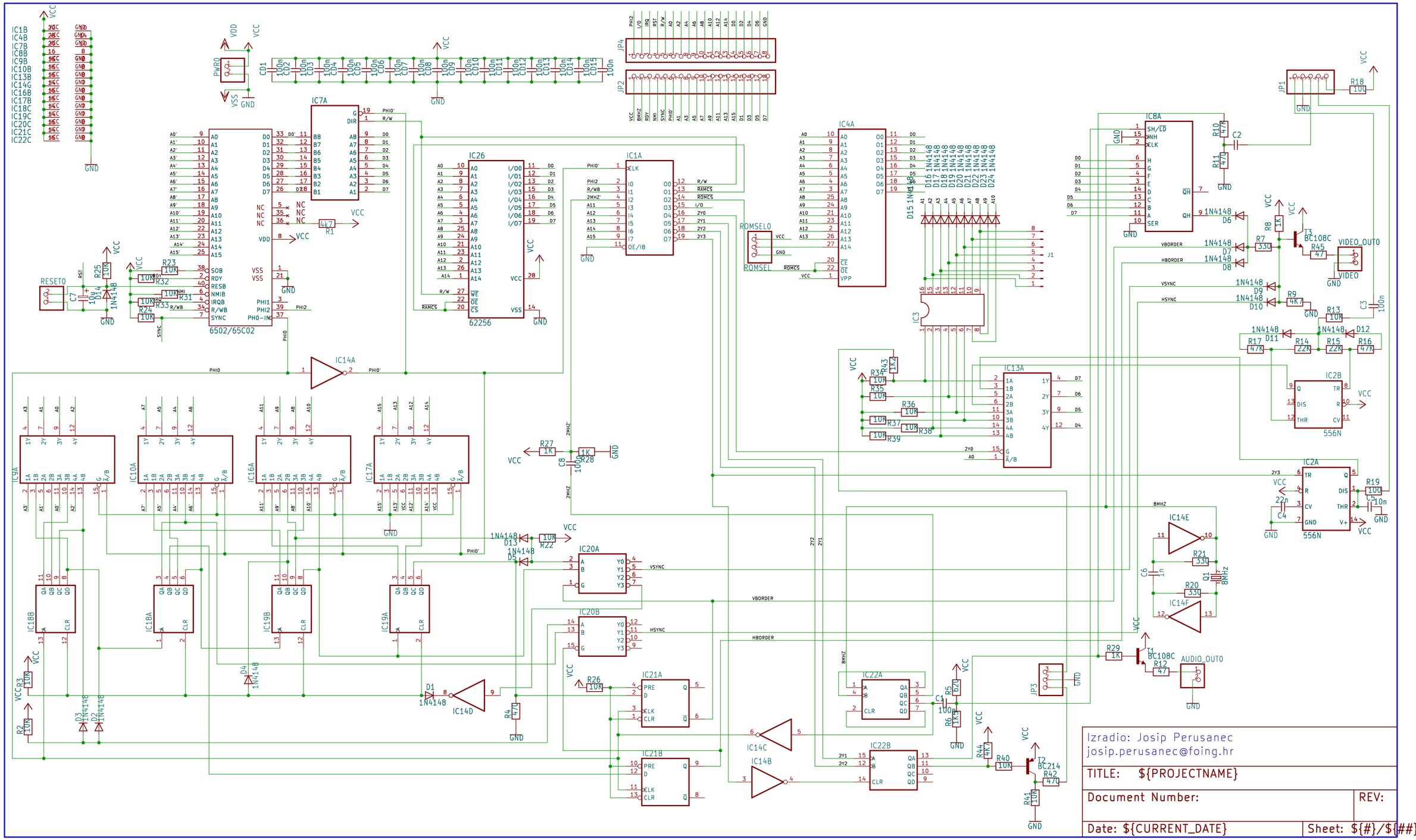
6502/65C02
62256
556N
556N
VIDEO_OUT0
AUDIO_OUT0
BC108C
BC214
Izradio: Josip Perusanec
josip.perusanec@foing.hr
TITLE: ${PROJECTNAME}
Document Number:
REV:
Date: ${CURRENT_DATE}
Sheet: ${#}/${##}