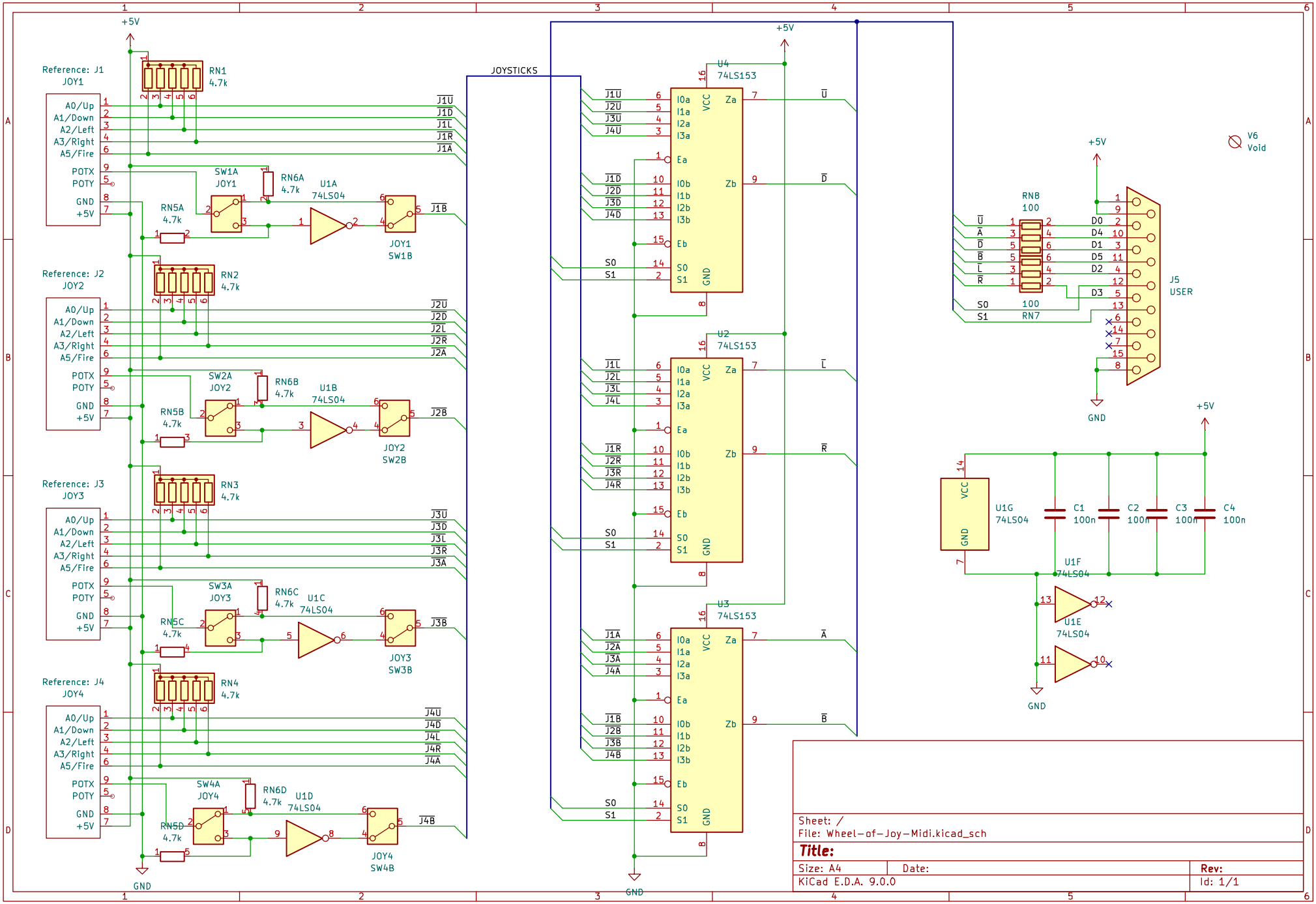
Reference: J1
JOY1
Reference: J2
JOY2
Reference: J3
JOY3
Reference: J4
JOY4
A0/Up
A1/Down
A2/Left
A3/Right
A5/Fire
POTX
POTY
GND
+5V
RN1
RN2
RN3
RN4
4.7k
SW1A
SW2A
SW3A
SW4A
RN6A
RN6B
RN6C
RN6D
RN5A
RN5B
RN5C
RN5D
U1A
U1B
U1C
U1D
74LS04
JOY1
SW1B
JOY2
SW2B
JOY3
SW3B
JOY4
SW4B
JOYSTICKS
U4
U2
U3
74LS153
VCC
GND
Za
Zb
Ea
Eb
S0
S1
RN8
100
RN7
J5
USER
D0
D1
D2
D3
D4
D5
U1G
U1F
U1E
C1
C2
C3
C4
100n
V6
Void
Sheet: /
File: Wheel-of-Joy-Midi.kicad_sch
Title:
Size: A4
Date:
Rev:
KiCad E.D.A. 9.0.0
Id: 1/1