AMRITA VISHWA VIDYAPEETHAM
DEEMED TO BE UNIVERSITY UNDER SECTION 3 OF UGC ACT, 1956
SCHOOL OF ENGINEERING COIMBATORE
Department of Electronics and Communication Engineering

B.Tech-CCE
23CCE385 |Open Laboratory - II

CB.EN.U4CCE23008 – DINESH KARTHIK V
CB.EN.U4CCE23021 – KARTHICK B
CB.EN.U4CCE23044– S SRIMAN SRINIVASH

AUTOMOTIVE DRIVE RECORDER FOR LOW END VEHICLES

Problem Statement

- The "Black box" is often referred as Event Data Recorder (EDR) or Accident Data Recorder (ADR), which is primarily related in the field of Aviation. If something unfortunate happens to the airplane, like a crash, the Black Box is used to figure out why and how it happened.

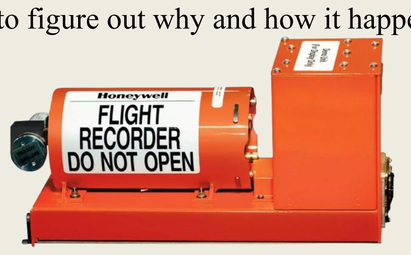

Fig 1. Black Box used in Airplanes [4]

- Low-end vehicles are often prone to accidents and the need for a black box that monitors the driver's behavior and vehicle condition is more necessary to enable accident investigators to determine the cause of the accident.
- It should provide a real-time feedback to the driver on their driving behavior, such as excessive speed or braking, which can help prevent accidents in the future and also provide evidence for legal and insurance claims, which can be used to determine fault and liability in an accident

Approach / Design / Methodology

- The proposed system implements an ESP32 as the central controller for continuous vehicular data telemetry acquisition, event detection, and resilient storage, complemented by conditional cloud synchronization after critical incidents.
- This system operates by logging the parameters like speed, acceleration during turn, angle of the car, indicator and brake status, GPS with the timestamp for every 3 seconds.
- When an accident or near crash is detected, the system automatically uploads an incident package to the cloud, including pre and post event sensor data so drivers and insurance investigators can accurately reconstruct and review what happened.

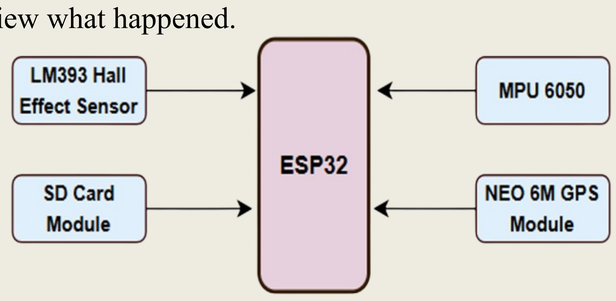

Fig 2. Sensors connected to ESP32

Circuit Diagram /Algorithm

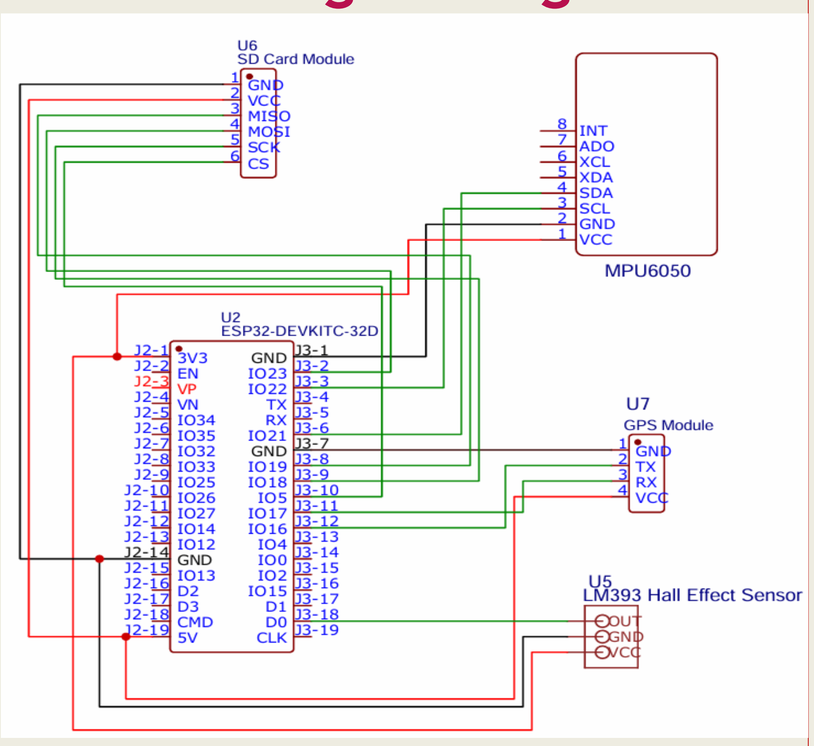

Fig 3. Schematic diagram of Automotive Drive Recorder

Simulation Results

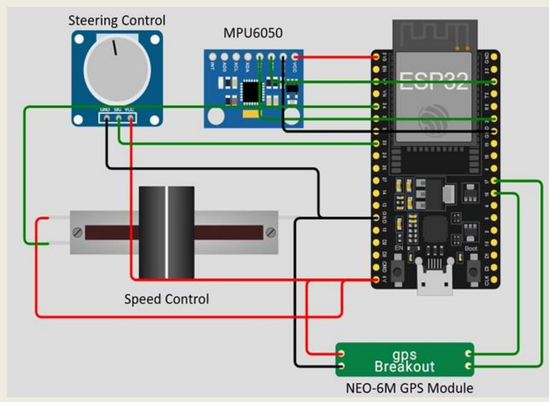

Fig 4. Simulation of the sensor interfacing with ESP32

```
Time: 2026-03-02 21:01:07 | Accel (g): X=1.25 Y=1.80 Z=1.70 |
Rotation (°/s): X=3.40 Y=3.32 Z=3.32 | Temp: 24.0 | Total Accel (g):
2.77 | Total Gyro (°/s): 5.79 | Condition: Sudden Turn/Brake
 | Speed: 2.00 km/h | Steering Angle: 7.00 degrees

---- CRASH DETECTED ----
Timestamp: 2026-03-02 21:01:08
Latitude: 28.654102
Longitude: 77.102501
Vehicle Speed: 2.00 km/h
Steering Angle: 9.00 degrees
Accel (g): X=1.75 Y=1.80 Z=1.70 | Rotation (°/s): X=3.40 Y=3.32
Z=3.32
---- Sending crash data to Adafruit IO ----
AIO POST to crash-lat -> HTTP 200
AIO POST to crash-lon -> HTTP 200
AIO POST to crash-time -> HTTP 200
AIO POST to crash-speed -> HTTP 200
AIO POST to crash-acc-x -> HTTP 200
```

Fig 5. Sensor data with GPS information after crash.

Working Model Picture

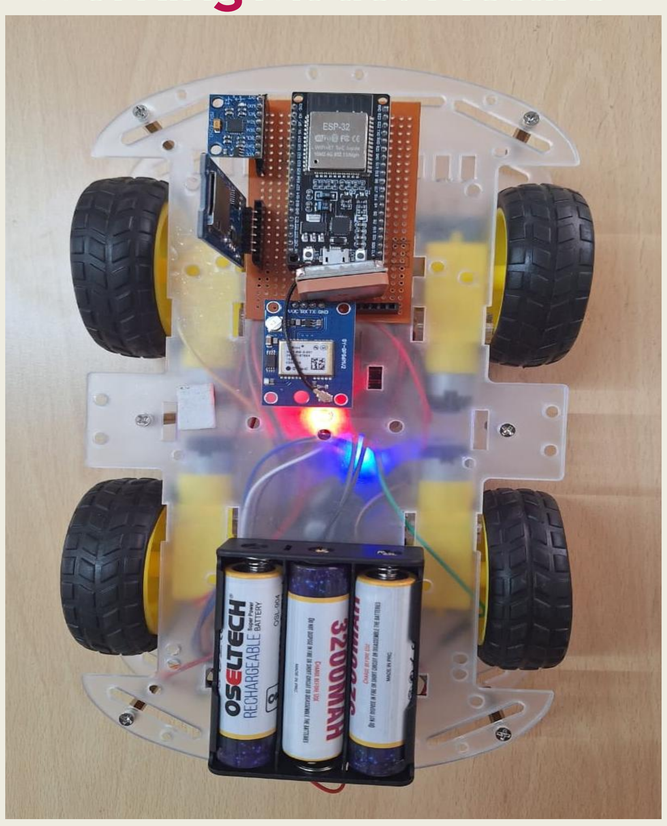

Fig 6. Working model of Car chassis with Black box mounted on top

PCB Layout

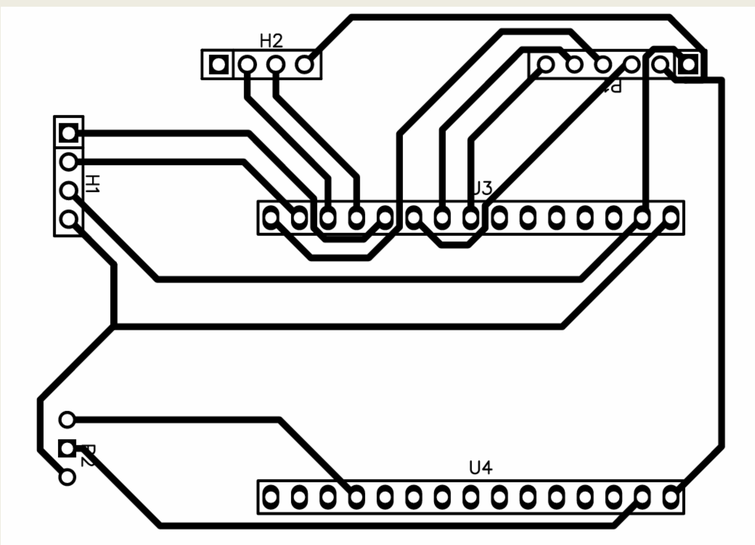

Fig 7. PCB Layout of the Vehicle Black box

Results

The automotive drive recorder system was successfully implemented and validated using real time hardware integration of ESP32 with MPU 6050 accelerometer/gyroscope, NEO 6M GPS module, LM393 Hall effect speed sensor, and SD card module. Upon detecting abnormal acceleration and rotation values during travel, the crash detection algorithm triggers which captures the GPS location with timestamp, speed, acceleration, gyroscope, brake and indicator status of the vehicle and then conveniently transmits the data to Adafruit IO dashboard with the help of its API. This allows for emergency response and accident analysis, providing valuable insights into the incident.

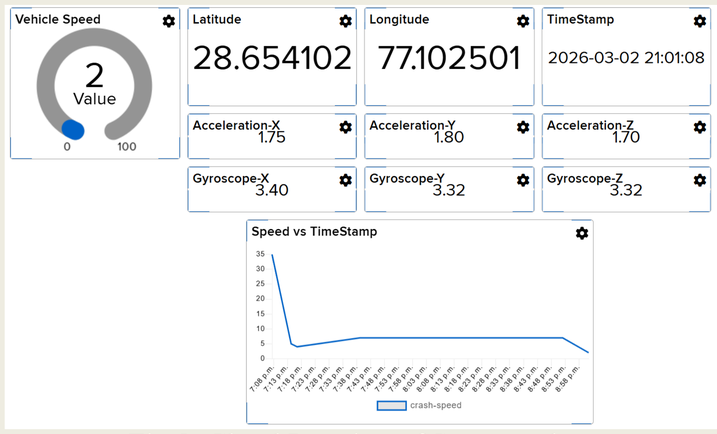

Fig 8. Cloud Logging of Sensor values

Three-axis acceleration data (X, Y, Z) from the MPU6050 sensor was continuously monitored with predefined baseline thresholds to detect crash events. A crash condition was identified when acceleration magnitude or vehicle axis tilt exceeded configured safety limits, indicating sudden impacts or abnormal driving conditions beyond normal operation.
The Hall effect sensor successfully measured wheel rotation pulses, enabling real-time speed calculation. All vehicular parameters including speed, acceleration, tilt angle, and location were logged continuously at fixed intervals

timestamp	accel_x_m	accel_y_m	accel_z_m	gyro_x_deg_s	gyro_y_deg_	gyro_z_deg_s	speed_kmh	gps_latitude	gps_longitu	temperature_C
14:28.1	0.563642	-0.06749	9.800218	0.460936482	-0.6618037	-2.05383646	0	11.0168	76.9558	29.894588
14:28.2	0.459216	0.241847	9.8332	-0.00111156	-2.8703276	-10.5004795	0.2	11.0168	76.9558	29.95513354
14:28.3	0.617433	0.017762	9.824354	-1.42036667	-0.1998568	-6.21459964	0.4	11.0168001	76.9558	29.93391764
14:28.4	0.854173	-0.2899	9.729609	0.184796566	-0.0168532	-1.53135616	0.6	11.0168003	76.9558	30.28708119
14:28.5	0.662756	0.061574	9.705723	3.827183677	0.89051555	2.068112663	0.8	11.0168005	76.9558	30.15097091
14:28.6	0.131616	-0.09537	9.771772	-1.45501479	-0.519459	10.02034618	1	11.0168007	76.955801	30.30345766
14:28.7	0.59099	0.068961	9.817505	0.108766957	0.38869528	-1.77362293	1.2	11.016801	76.955801	30.01976102
14:28.8	0.432316	-0.0966	9.715529	-0.20026128	2.18870927	-2.05112146	1.4	11.0168014	76.955801	30.25781768
14:28.9	0.651225	0.04834	9.831752	-0.39664368	3.66747279	-11.0803524	1.6	11.0168018	76.955802	30.07787397
14:29.0	0.736152	-0.14007	9.742551	0.164456145	-1.3176159	-0.27946318	1.8	11.0168022	76.955802	30.11036583
14:29.1	0.739774	0.093781	9.963092	-2.77307965	2.15197799	-5.13949278	2	11.0168027	76.955803	30.38126395

Fig 9. SD-Card based CSV data logging of Vehicle parameters captured by the Black Box System

Upon crash detection, the system immediately captured GPS coordinates (latitude and longitude), logged the timestamp and crash flag, and stored all recorded parameters to the SD card in CSV format for forensic analysis.

References

[1] Khare, Sameer, and K. P. Peeyush. "Automotive drive recorder as black box for low end vehicles." In *2017 International Conference on Advances in Computing, Communications and Informatics (ICACCI)*, pp. 1855-1861. IEEE, 2017.

[2] Ponmalar, A., B. Chandra, S. Aarthi, G. K. R. Bhavana, Anand A. Jose, and S. Gomathi. "IoT Based Automative Drive Recorder As Black Box." In *2022 International Conference on Computer, Power and Communications (ICCPC)*, pp. 557-561. IEEE, 2022.

[3] Jegan, J., M. Raja Suguna, M. Shobana, H. Azath, S. Murugan, and M. Rajmohan. "IoT-Enabled Black Box for Driver Behavior Analysis Using Cloud Computing." In *2024 International Conference on Advances in Data Engineering and Intelligent Computing Systems (ADICS)*, pp. 1-6. IEEE, 2024..

[4] World Aviation ATO, "Super Jumbo." [Online]. Available: https://worldaviationato.com/backend/wp-content/uploads/06wmt-superJumbo.jpg. [Accessed: March 2, 2025].