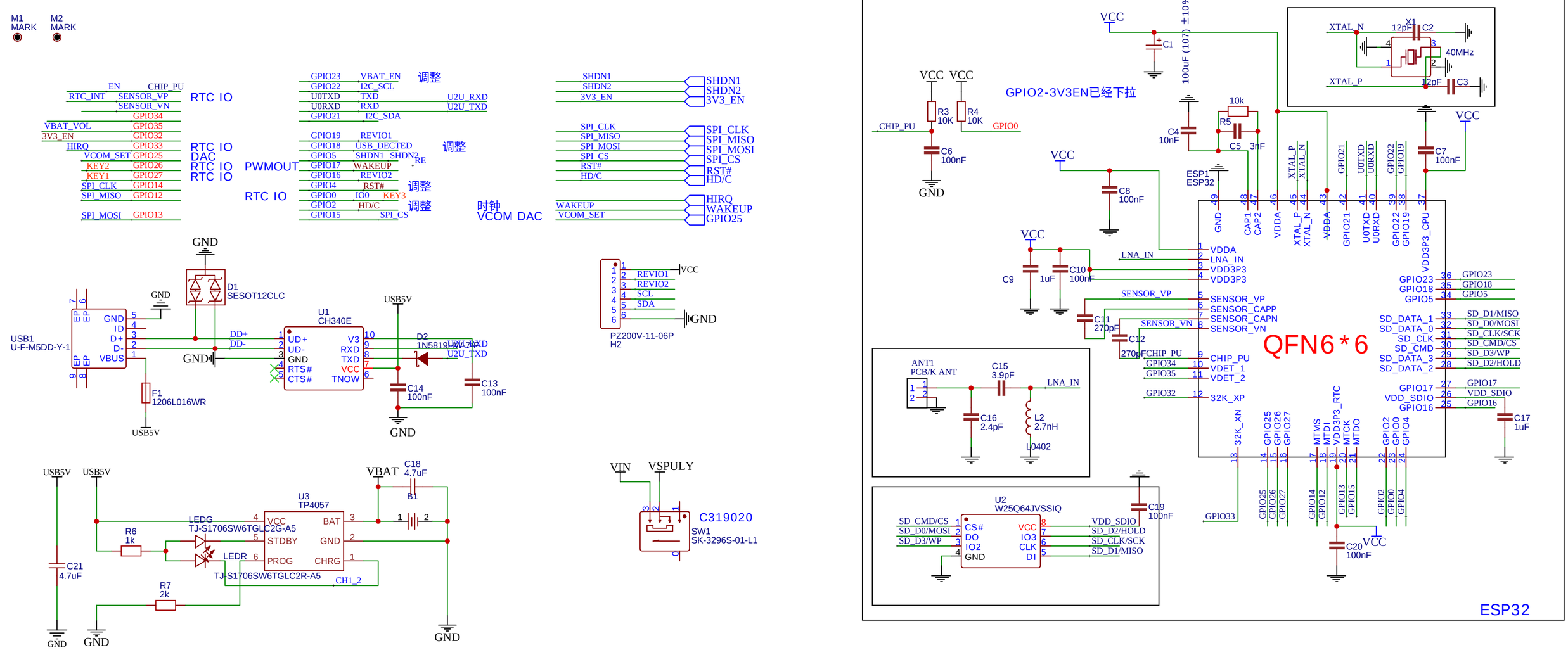

TITLE: 01 EPD Power and Interface	REV: 1.0
Company: amobbs.com	Sheet: 1/4
Date: 2020-06-14 Drawn By: qtechzdh	

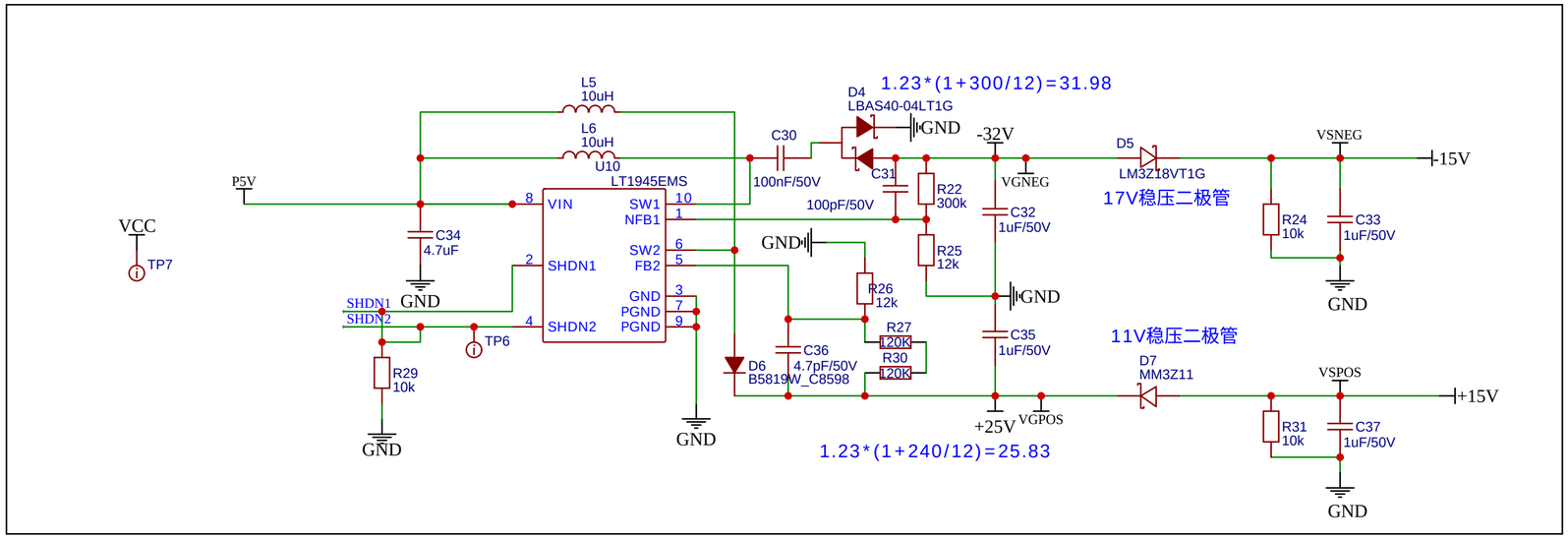

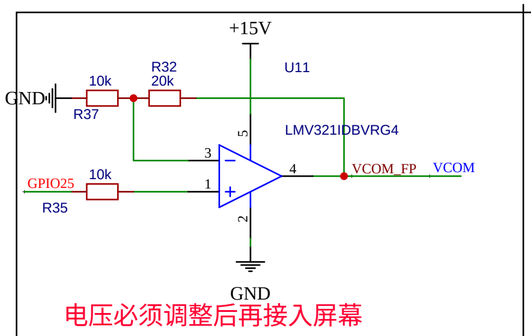

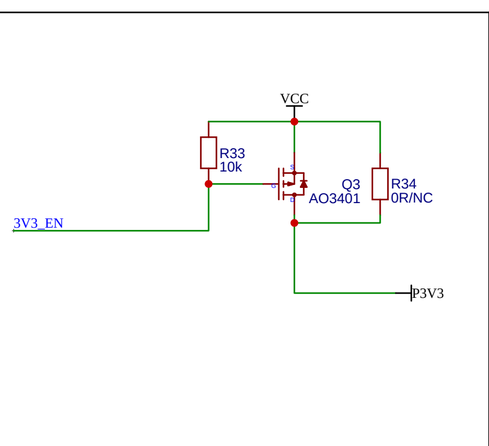

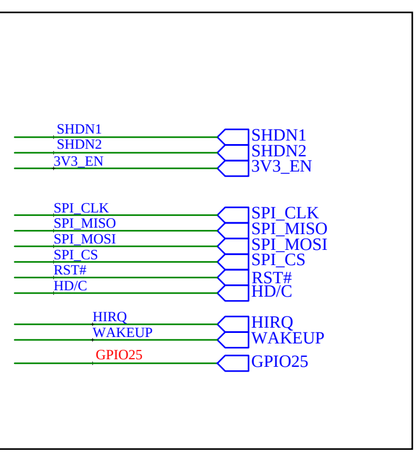

配置WAKEUP 高速PWM输出通道 40Mhz

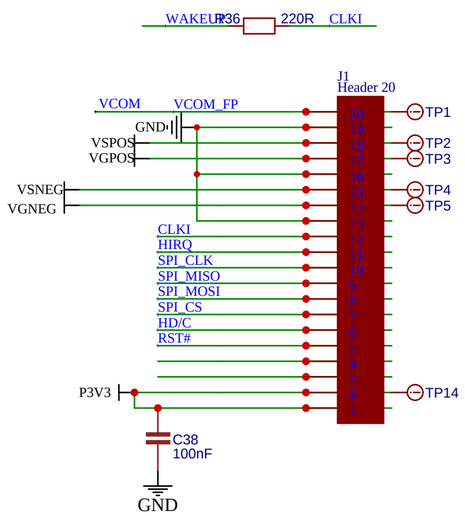

Note.

2020-07-23第一版

TITLE: 01 EPD Power and Interface		REV: 1.0
立创EDA	Company: amobbs.com	Sheet: 1/4
	Date: 2020-06-14 Drawn By: qtechzdh	