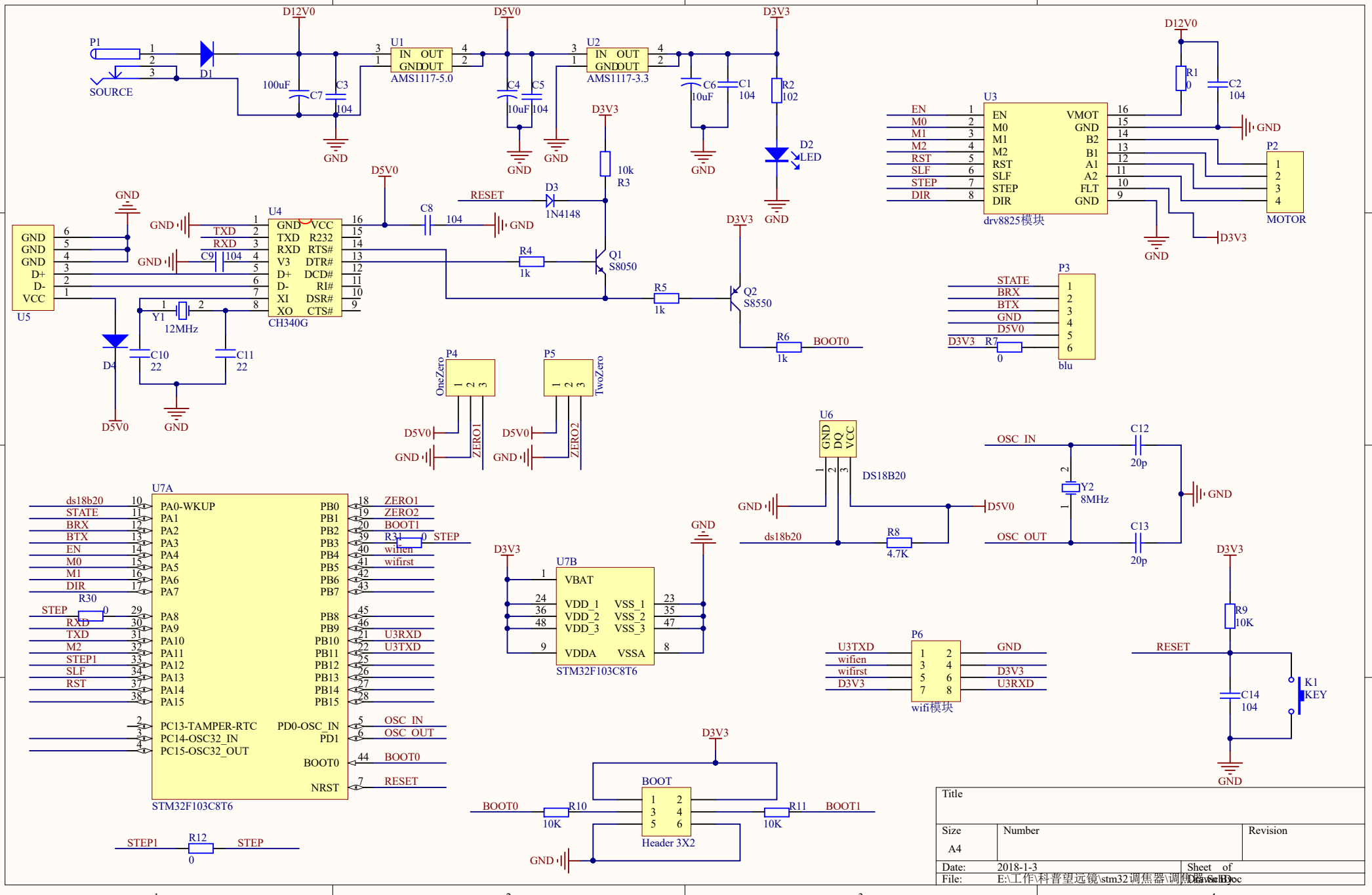

P1
SOURCE
D1
D12V0
100uF
C7
C3
104
U1
IN OUT
GND OUT
AMS1117-5.0
D5V0
C4
10uF
C5
104
U2
IN OUT
GND OUT
AMS1117-3.3
D3V3
C6
10uF
C1
104
R2
102
D2
LED
GND
D3V3
10k
R3
RESET
D3
1N4148
C8
104
U4
GND VCC
TXD R232
RXD RTS#
V3 DTR#
D+ DCD#
D- RI#
XI DSR#
XO CTS#
CH340G
TXD
RXD
C9
104
U5
GND
D+
D-
VCC
Y1
12MHz
C10
22
C11
22
D4
R4
1k
Q1
S8050
R5
1k
Q2
S8550
R6
1k
BOOT0
P4
OneZero
ZERO1
P5
TwoZero
ZERO2
U3
EN
M0
M1
M2
RST
SLF
STEP
DIR
VMOT
B2
B1
A1
A2
FLT
drv8825模块
R1
0
C2
104
P2
MOTOR
P3
STATE
BRX
BTX
D5V0
R7
0
blu
U6
GND DQ VCC
DS18B20
R8
4.7K
OSC_IN
OSC_OUT
C12
20p
C13
20p
Y2
8MHz
U7A
ds18b20
PA0-WKUP
PA1
PA2
PA3
PA4
PA5
PA6
PA7
PA8
PA9
PA10
PA11
PA12
PA13
PA14
PA15
PC13-TAMPER-RTC
PC14-OSC32_IN
PC15-OSC32_OUT
PB0
PB1
PB2
PB3
PB4
PB5
PB6
PB7
PB8
PB9
PB10
PB11
PB12
PB13
PB14
PB15
PD0-OSC_IN
PD1
BOOT0
NRST
ZERO1
ZERO2
BOOT1
R31
0
wifien
wifirst
U3RXD
U3TXD
R30
STEP
RXD
TXD
M2
STEP1
SLF
RST
OSC_IN
OSC_OUT
BOOT0
RESET
STM32F103C8T6
U7B
VBAT
VDD_1
VDD_2
VDD_3
VDDA
VSS_1
VSS_2
VSS_3
VSSA
STM32F103C8T6
P6
U3TXD
wifien
wifirst
D3V3
GND
U3RXD
wifi模块
R9
10K
C14
104
K1
KEY
BOOT
Header 3X2
R10
10K
R11
10K
BOOT1
R12
0
STEP1
STEP
Title
Size
A4
Number
Revision
Date: 2018-1-3
Sheet of
File: E:\工作\科普望远镜\stm32调焦器\调焦器.SchDoc
Drawn By:

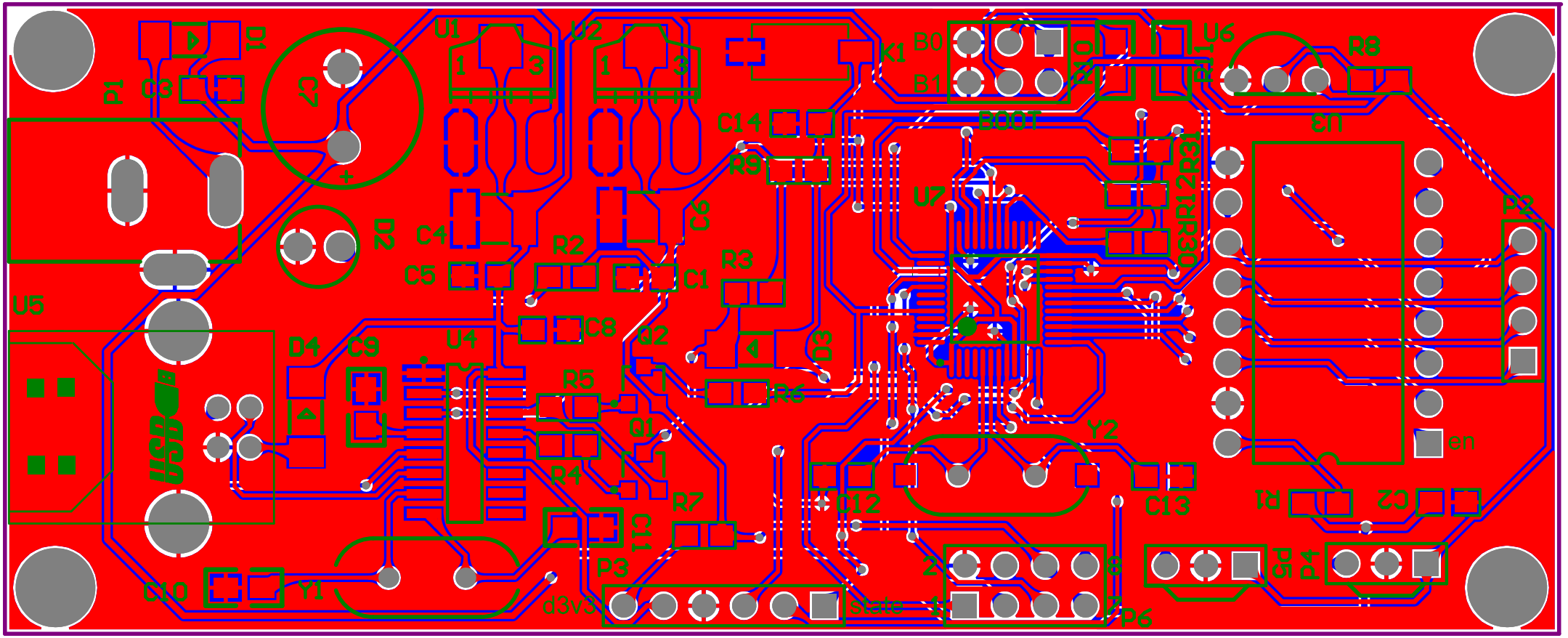

U1
U2
K1
B0
B1
U6
R8
C14
R9
U7
C11
C4
C5
R2
C1
R3
U5
D4
C9
U4
C8
Q2
R5
R6
Q1
R4
R7
Y2
C12
C13
P3
d3v3
State
P6
C10
Y1

Comment	Description	Designator	Footprint	LibRef	Quantity
Header 3X2	Header, 3-Pin, Dual row	BOOT	HDR2X3	Header 3X2	1
Cap	Capacitor	C1, C2, C3, C5, C8, C12, C13, C14	0805_cap	Cap	8
CAP		C4, C6	1812	CAP2	2
CAP		C7	1000UF/16V	CAP2	1
104		C9	0805	C	1
22		C10, C11	0805	C	2
Diode	High Conductance Fast Diode	D1, D4	Diode	Diode	2
LED	LED 发光二极管	D2	LED	LED	1
1N4148	1N4148	D3	Diode	D	1
KEY	Switch	K1	KEY2	KEY2	1
SOURCE		P1	source	SOURCE	1
MOTOR	Header, 4-Pin	P2	HDR1X4	Header 4	1
blu	Header, 6-Pin	P3	HDR1X6	Header 6	1
OneZero	Header, 3-Pin	P4	HDR1X3	Header 3	1
TwoZero	Header, 3-Pin	P5	HDR1X3	Header 3	1
wifi模块	Header, 4-Pin, Dual row	P6	HDR2X4	Header 4X2	1
S8050	8050/BCW846/BCW847	Q1	SOT-23R	NPN	1
S8550	8550/BCW68	Q2	SOT-23R	PNP	1
0	Resistor	R1, R7, R12, R30, R31	0805	RES	5
102	Resistor	R2	0805	RES	1
10k	Resistor, Resistor, [NoValue], [NoValue]	R3, R9, R10, R11	0805	RES, RES, R, R	4
1k	Resistor	R4, R5, R6	0805	RES	3
4.7K	Resistor	R8	0805	RES	1
AMS1117-5.0		U1	AMS1117	AMS1117	1
AMS1117-3.3		U2	AMS1117	AMS1117	1
drv8825模块		U3	DRV8825模块 - duplicate	drv8825模块	1
CH340G	USB2UART	U4	SOP16M	CH340G	1
USB-B		U5	USB_B	USB-B	1
DS18B20		U6	DS18B20	DS18B20	1
STM32F103C8T6	STM32 ARM-based 32-bit MCU Performance Line with 64 kB Flash, 20 kB Internal RAM, -40 to +85癈 Temperature, 48-Pin LQFP, Tray	U7	LQFP48_N	STM32F103C8T6	1
12MHz	Crystal Oscillator	Y1	XTAL_US	XTAL	1
8MHz	Crystal Oscillator	Y2	XTAL_US	XTAL	1