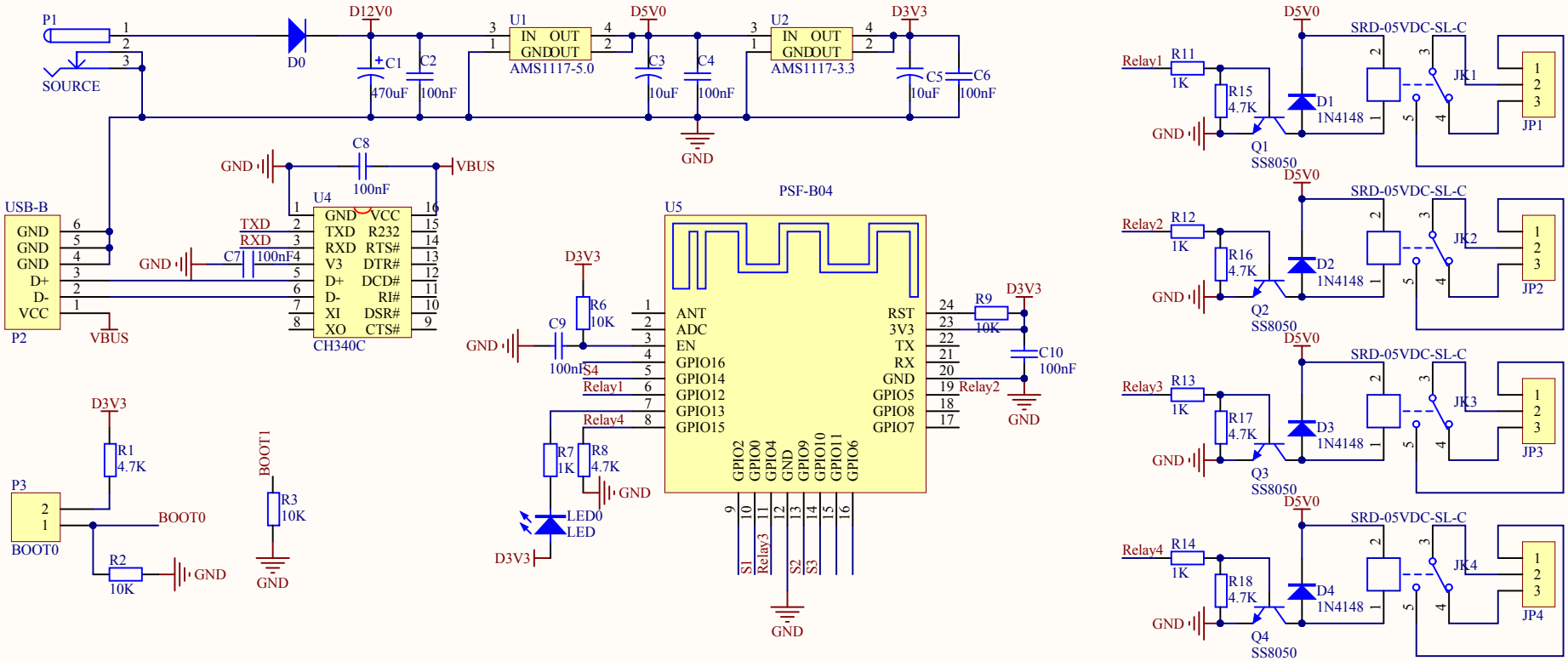

Title		
Size A4	Number	Revision
Date: 2019-9-16	Sheet of	
File: D:\Projects\Altium\SSRoof\SSRoof.SchDoc	Drawn By:	