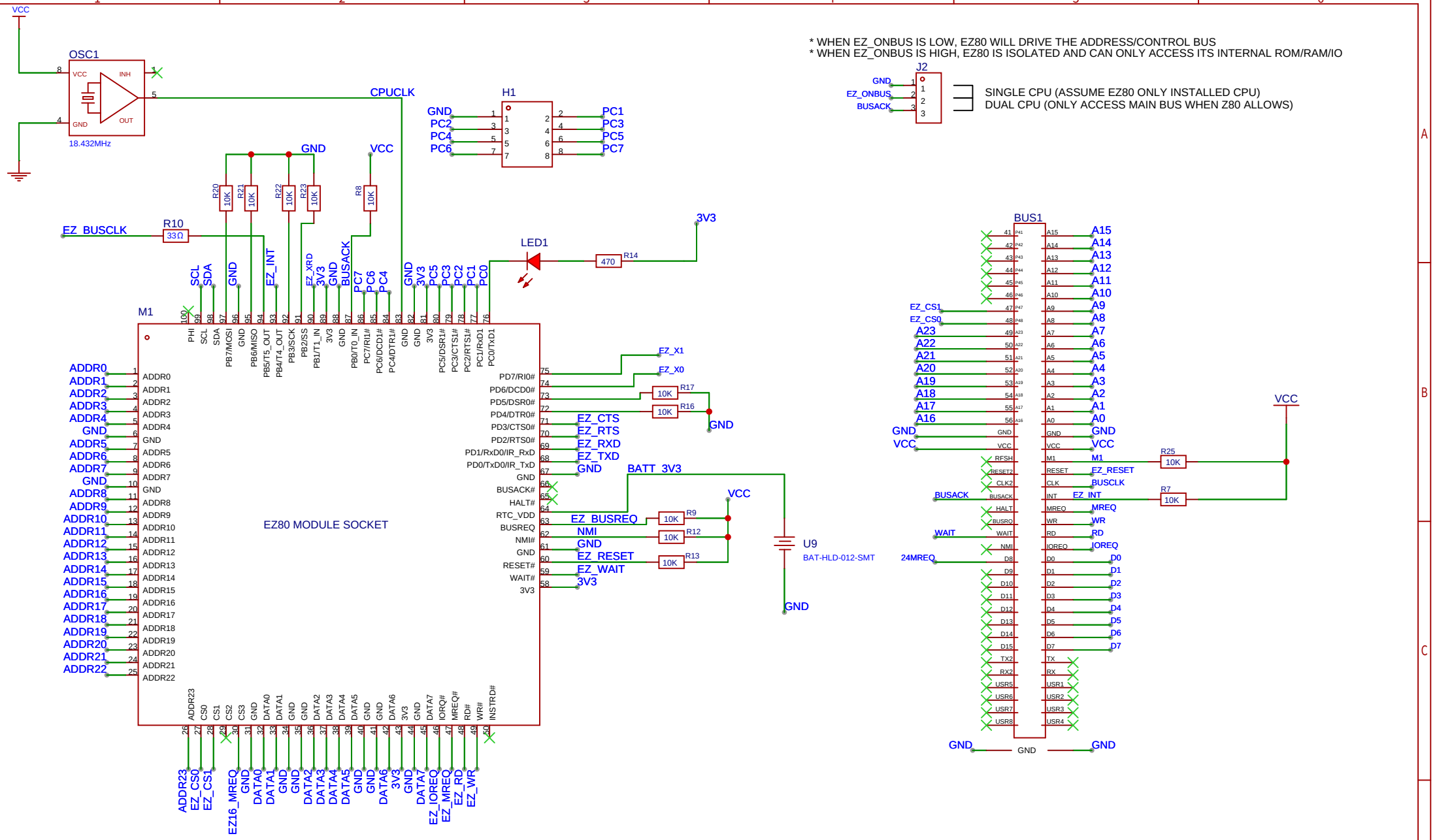

1. Use Round Machine Sockets for CPU's socket
2. To take pins to be diameter between 15mil (0.38mm) and 25mil (0.635mm)

EZ80-INTERFACE

Dino Boards

1 MAIN

Created:	2024-05-13
Updated:	2024-07-25
Version:	V1.5
Count:	4

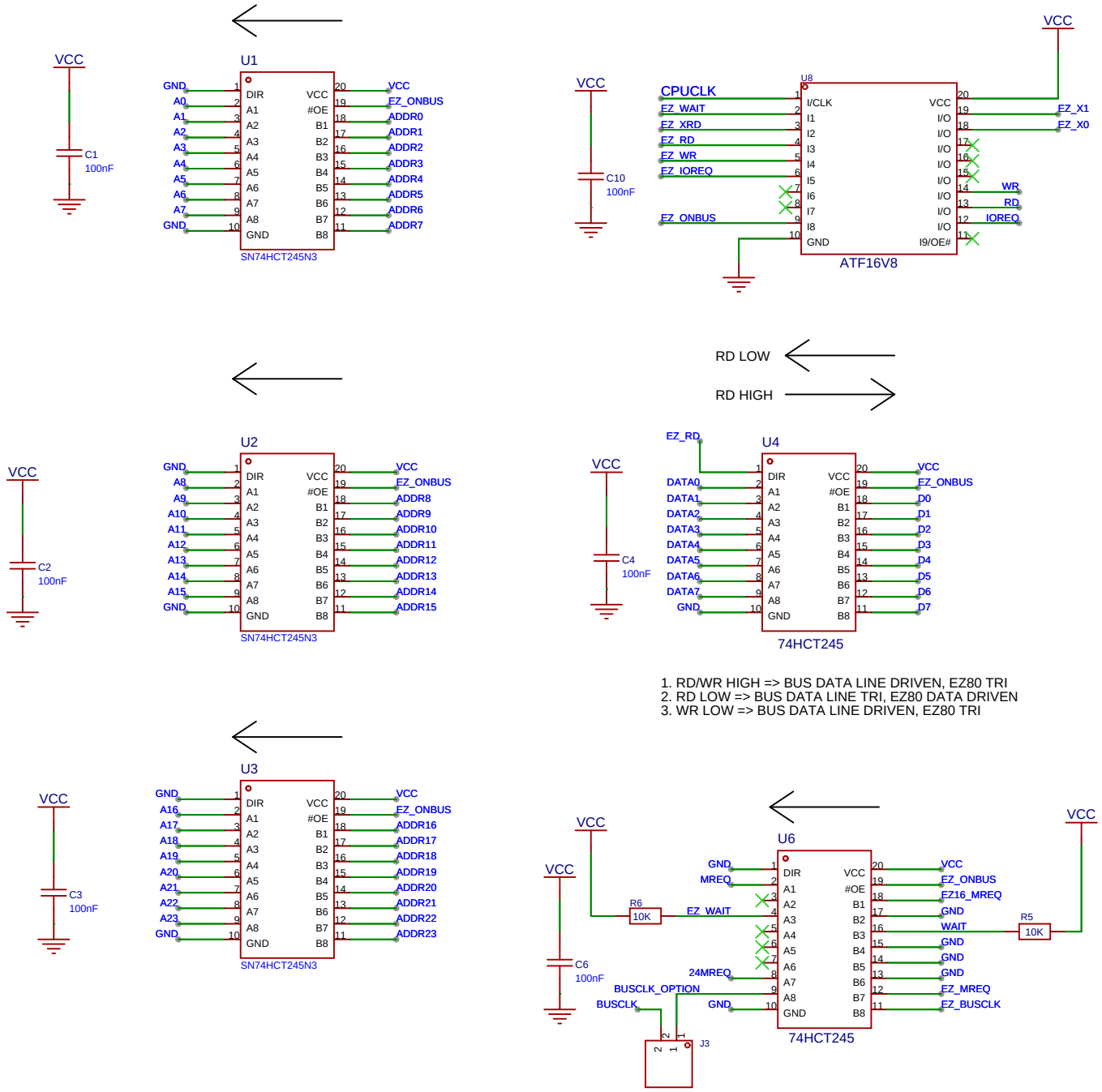

EZ80-INTERFACE

Dino Boards

INTERFACE

Created:	2024-05-14
Updated:	2024-08-02
Version:	V1.5
Count:	4

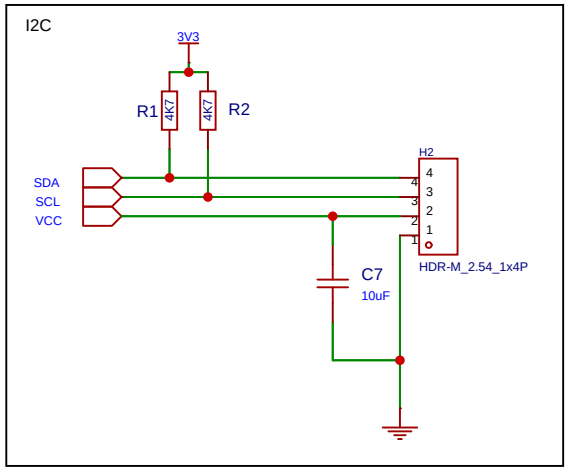

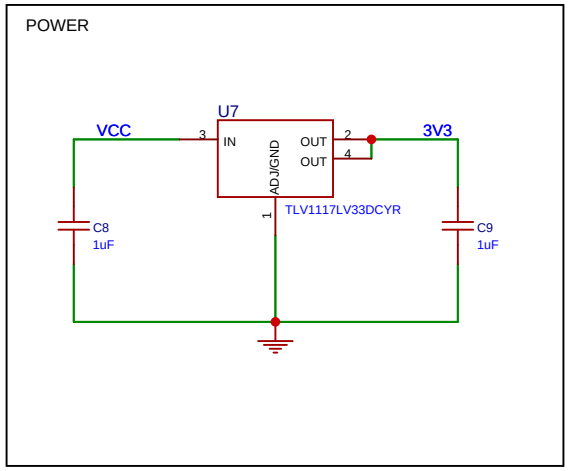

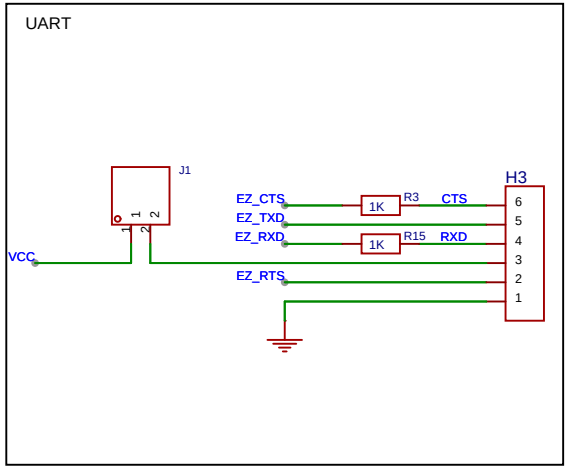

EZ80-INTERFACE

Dino Boards

3 ON-BOARD

Created:	2024-05-14
Updated:	2024-07-15
Version:	V1.5
Count:	4

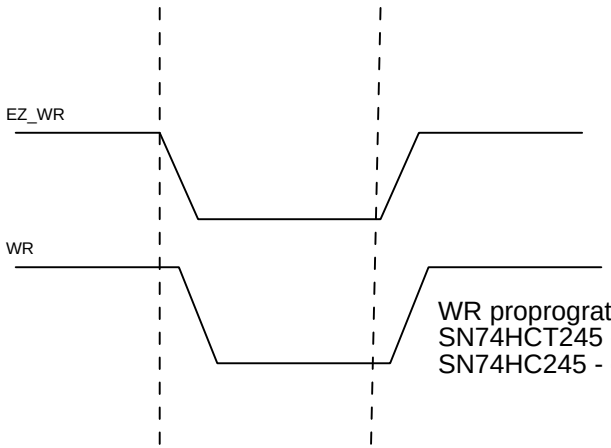

WR proprogration delay of approx. 20ns
SN74HCT245 - delay between 16ns to 28ns
SN74HC245 - delay between 15ns to 26ns

V1.1
* LED1 orientation correction
* Added U8 to fix data bus contention
* Added pull up resistor for M1
* RESET is no longer buffered and wired from backplane to EZ80 directly

V1.2
* BUFFER BUSCLK

V1.3
* MAP IORQ TO CS2 OR EZ_IORQ
* DELAY EZ_WR FOR BUFFER
* DATA BUFFER ALWAYS DRIVEN FROM EZ_ONBUS

V1.4
* REMOVE RC FILTER FOR WR
* WIRE WR to U4 DIR
* REMOVE J4 - EZ_IOREQ

V1.5
* ADDED CR2016 BATTERY HOLDER
* ADDITIONAL SIGNALS TO/FROM ATF16V8

EZ80-INTERFACE

Dino Boards

4 NOTES

Created:	2024-07-07
Updated:	2024-08-02
Version:	V1.5
Count:	4