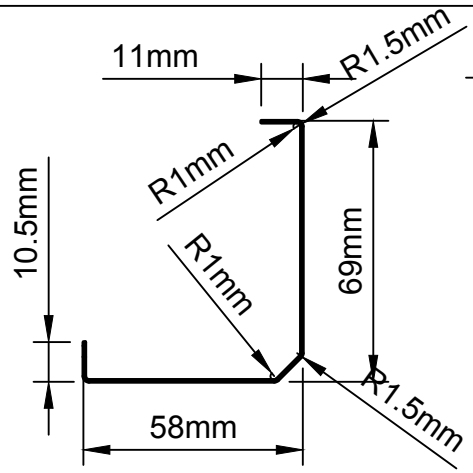

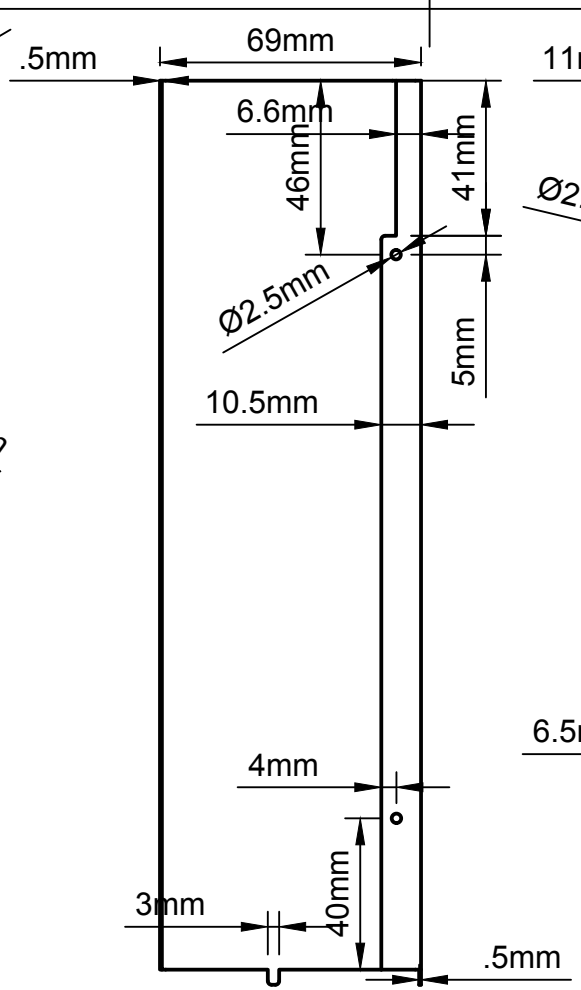

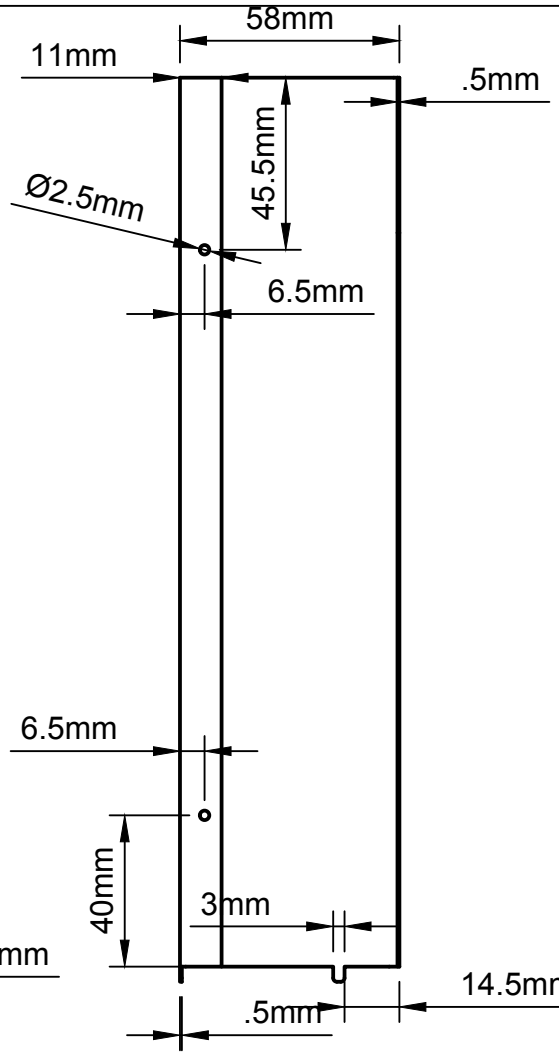

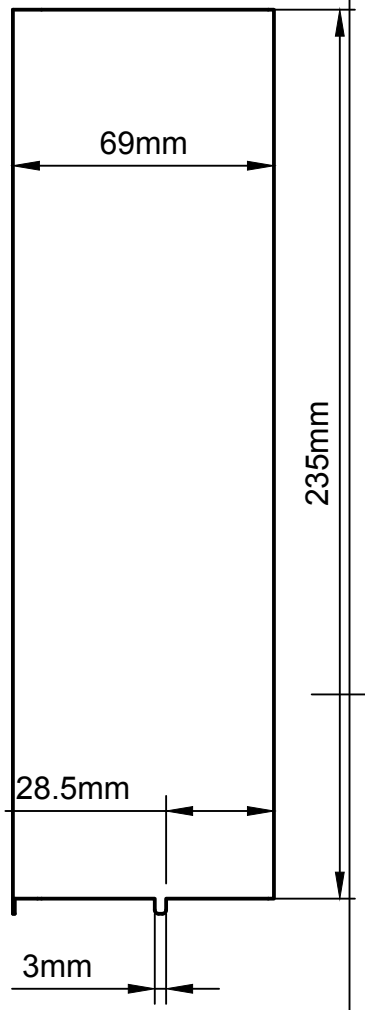

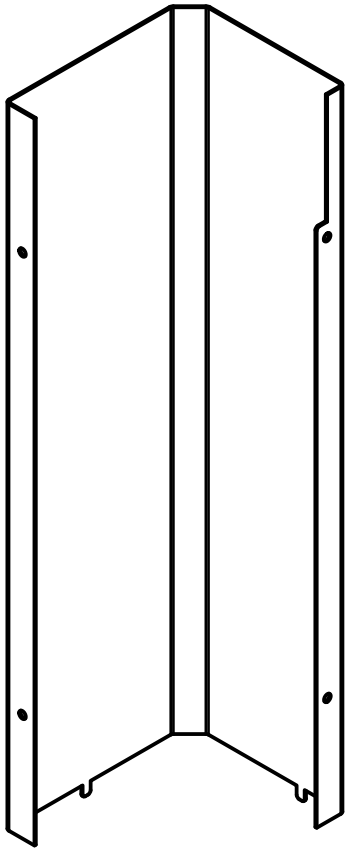

Dept.	Technical reference	Created by	Approved by
		Morten Nielsen 20-12-2017	
The 4x 2.5mm holes should be threadded m3		Document type	Document status
		Title: MotorShield right	DWG No.
			Rev. / Date of issue / Sheet 1/1