Mobile Network Evolution: From GSM to LTE

Architecture, Performance, and Technology Transitions

Ajibawo, Oladipo Oluyemisi

Department of Computing, Engineering and Technology

MSc Telecommunications Engineering

November 2015

Abstract

This article provides a comparative analysis of the evolution of mobile wireless communication systems from GSM (Global System for Mobile Communications) through UMTS (Universal Mobile Telecommunications System) to Long Term Evolution (LTE). The study examines network architecture, modulation methods, data rates, and traffic classes for GSM and UMTS under 3GPP Release 99 and Release 4. High Speed Packet Access (HSPA) technologies, including HSDPA, HSUPA, and the enhancements introduced in 3GPP Releases 7 and 8, are evaluated with respect to their impact on network performance. The architecture, key interface components, and design principles of LTE are then reviewed, covering the eNode-B, S1 and X2 interfaces, the Mobility Management Entity (MME), the Serving Gateway (S-GW), and the PDN Gateway. The discussion concludes by highlighting the trajectory of mobile network evolution and the role of LTE in enabling broadband, low-latency wireless services.

1. Introduction

Mobile communication systems have profoundly transformed the way people communicate, integrating telecommunications with mobility at a global scale. A significant degree of advancement has been achieved within a relatively short period in the history of mobile wireless systems. The evolution of mobile wireless access technologies is approaching its fifth generation (5G).

The cellular concept was introduced in first-generation (1G) technologies, which enabled large-scale mobile wireless communication and became commercially available in the 1980s. First-generation systems relied on analogue cellular technologies and were later superseded by digital communication technology, known as second generation (2G), in the 1990s. The 2G transition significantly improved mobile network quality and introduced services such as Short Message Service (SMS) and lower-speed data. GSM is widely recognised as the canonical 2G technology.

Third-generation (3G) technologies converged data and voice communications into a unified network. The ITU specified 3G requirements as part of the International Mobile Telephone 2000 (IMT-2000) project, mandating that digital networks must provide 144 kbps throughput at mobile speeds, 384 kbps at pedestrian speeds, and 2 Mbps in indoor environments. UMTS-HSPA and CDMA2000 EV-DO are the major 3G technologies. However, 3G systems remain bandwidth-constrained, particularly for video communication traffic (Chakraborty, 2013).

Fourth-generation (4G) technology, commonly identified as LTE (Long Term Evolution), provides access to a broad range of telecommunications services including wireless broadband access, Multimedia Messaging Service (MMS), video chat, mobile TV, HDTV content, Digital Video Broadcasting (DVB), and other bandwidth-intensive services in multiuser environments (Sesia, Toufik and Baker, 2011).

2. Comparative Review of GSM and UMTS

2.1 Modulation Methods and Data Rates

GSM

GSM is the most widely deployed 2G air interface standard worldwide. Its global penetration enables subscribers to use their devices across international networks. GSM handsets incorporate a clip-on Subscriber Identity Module (SIM) card containing a microchip that stores user identity information including speed-dial lists. The SIM card encrypts voice and data prior to transmission.

GSM, originally established by European standards bodies, was first commercially deployed in 1992. The standard divides 200 kHz spectrum channels into eight time slots. Seven time slots carry traffic and one carries control signals. Initially deployed exclusively for voice communication, the control channel was later repurposed to carry Short Message Service (SMS) text messages. GSM uses Time-Division Multiple Access (TDMA) and employs Gaussian Minimum Shift Keying (GMSK) modulation.

UMTS

Universal Mobile Telecommunications System (UMTS) is a 3G mobile communication system incorporating a radio interface based on Wideband Code Division Multiple Access (WCDMA). The radio frequencies used in UMTS are in the range of 1900-2025 MHz and 2110-2200 MHz.

UMTS enables a range of wireless multimedia communications distributed across the Internet protocol suite. The system allows multiple mobile Internet users to access multimedia content available across the internet, delivering data rates of up to 2 Mbps in indoor environments and 384 Kbps in outdoor environments.

2.2 Types of Traffic

GSM Traffic Classes

1. Signalling: 16k, 32k, and 64k
2. Voice and Fax
3. GSM Data: GPRS, EDGE, and Extended Data

UMTS Traffic Classes

4. Conversational class: voice, video telephony, video gaming
5. Streaming class: multimedia, video-on-demand, webcast
6. Interactive class: web browsing, network gaming, database access
7. Background class: email, SMS, file downloading

2.3 Network Architecture

GSM Architecture

The GSM network architecture comprises three principal components: the Mobile Station (MS), the Base Station Subsystem (BSS), and the Network Subsystem.

Mobile Station (MS): The MS, also referred to as Mobile Equipment (ME), Mobile Terminal (MT), or Handset, typically contains the Subscriber Identity Module (SIM). Devices are available in three form factors and each carries an IMEI (International Mobile Equipment Identity), while each SIM has a unique IMSI (International Mobile Subscriber Identity).

Base Station Subsystem (BSS): The BSS consists of the Base Station Controller (BSC) and the Base Transceiver Station (BTS). The BSC manages a group of interconnected BTSs, with call maintenance as its primary function. The BTS uses radio transmitters to connect mobile stations to the radio network.

Network Subsystem: The Network Subsystem comprises the Mobile Switching Centre (MSC), Home Location Register (HLR), Visitor Location Register (VLR), Authentication Centre (AuC), and Equipment Identity Register (EIR). The MSC manages mobile subscriber functions including registration, authentication, location updating, handovers, and call routing. The HLR stores IMSI, IMEI, and VLR address for each subscriber. The VLR holds details of visiting mobile stations including last known location and power usage. The AuC maintains the secret key for authentication and encryption. The EIR contains a database of all valid mobile station equipment on the network.

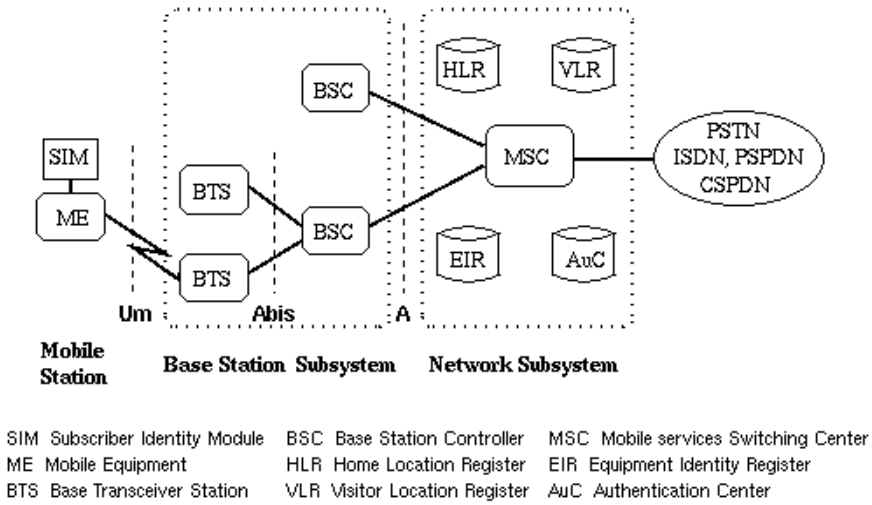

Figure 1: GSM Network Architecture (Eberspacher et al., 2009)

UMTS Architecture

The key components of a UMTS system are: UTRAN (Universal Terrestrial Radio Access Network), CN (Core Network), UE (User Equipment), and NMS (Network Management Station). UTRAN is located between the Uu and Iu open interfaces and controls WCDMA radio resources, including handover management. Base Stations (BSs) are positioned between the Uu and Iub interfaces and establish physical implementation of these interfaces using the protocol stack. The Radio Network Controller (RNC) sits between the Iub and Iu interfaces

and acts as the switching and controlling element within the UTRAN. The UMTS Core Network (CN), located between the access networks and external networks, provides all communication services to UMTS users through both Packet-Switched (PS) and Circuit-Switched (CS) service domains.

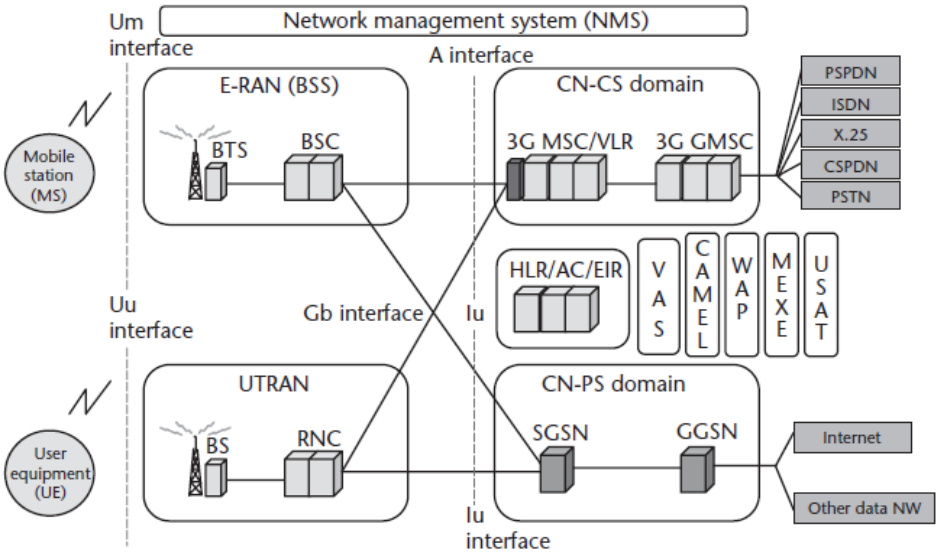

Figure 2: UMTS Network Architecture, Release 99 (Atayero et al., 2011)

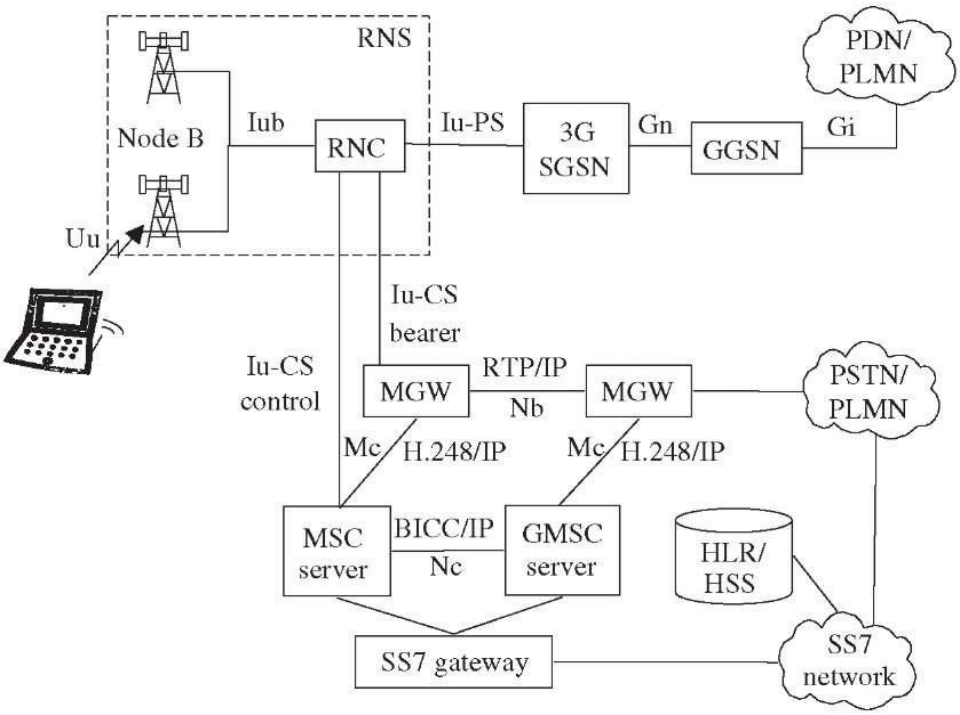

Figure 3: UMTS Network Architecture, Release 4 (Holma and Toskala, 2000)

3GPP Release 99 and Release 4 are identical in terms of UTRAN, UE, and NMS components. The distinction between the two releases lies in the Core Network. In Release 4, the CN CS domain MSC/VLR and GMSC have evolved into a (G)MSC Server and Media Gateway (MGW). All connection control is managed by the server

while the MGW performs actual switching and network interworking functions. In some configurations, a small number of MSC/GMSC servers can control multiple MGWs (Sauter, 2011; Abdullah et al., 2014).

3. High Speed Packet Access (HSPA)

High Speed Packet Access (HSPA) is a broadband enhancement to WCDMA networks (FDD and TDD) that improves overall network performance. It combines High Speed Downlink Packet Access (HSDPA), specified in 3GPP Release 5 in 2002, and High Speed Uplink Packet Access (HSUPA), specified in 3GPP Release 6 in December 2004. HSPA increases data rates to support high-data-volume and low-latency applications such as Voice over IP (VoIP).

3.1 High Speed Downlink Packet Access (HSDPA)

HSDPA is a mobile telephony protocol that represents a significant improvement in downlink packet data transfer for 3GPP systems. It is not merely an incremental enhancement to 3GPP specifications, but a material upgrade that delivers clear improvements and substantially higher data speeds compared to standard 3G systems. HSDPA provides a mechanism through which downlink capacity is expanded within the existing spectrum, with the downlink air interface throughput doubled or tripled.

Existing 3G systems can only sustain a limited maximum data rate per user at any given time before cell capacity is exhausted. A typical mobile user consumes more downlink than uplink resources (Enan and Mustafa, 2014), since most applications require greater downlink payload. HSDPA addresses this downlink bottleneck by increasing the data rate allocated to each user and expanding overall system capacity (Holma and Toskala, 2006).

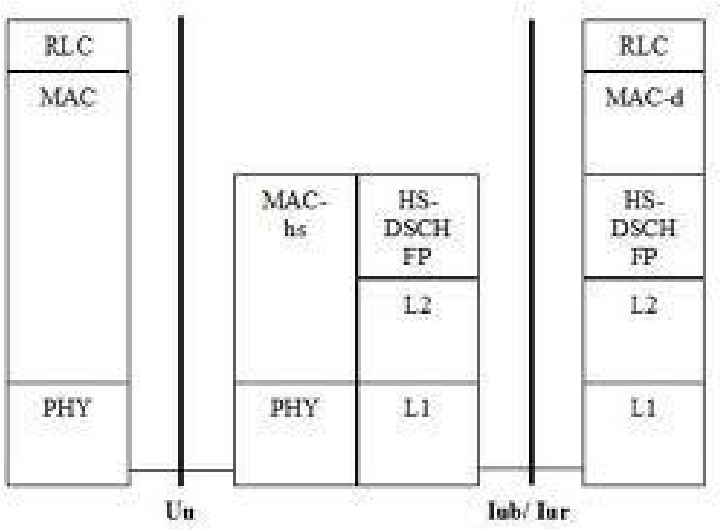

Figure 4: HSDPA Architecture (Abdullah et al., 2014)

Features of HSDPA

8. HSDPA provides higher-order 16QAM modulation, improving spectral efficiency over standard UMTS.
9. Both code division and time division are used in scheduling User Equipment (UE).
10. The maximum theoretical downlink transmission rate reaches 14.4 Mbit/s.

11. Hybrid Automatic Repeat Request (HARQ) and Adaptive Modulation and Coding (AMC) are applied at the physical layer, enabling modulation and coding formats to adapt dynamically to channel conditions.

Advantages of HSDPA

12. HSDPA uses shorter frame lengths, providing faster response to radio channel degradation.
13. HSDPA is well suited to applications with variable and irregular bandwidth requirements.
14. Specific delay characteristics of HSDPA may benefit novel applications such as interactive networked systems.
15. HSDPA adds a high-speed downlink shared channel optimised for higher-speed data transfer, improving downlink throughput exclusively.

Table 1: Data Rates for Mobile Communication Systems (Holma and Toskala, 2000)

System	GSM	GPRS	EDGE	3G (R99)	HSDPA
Typical Max. Data Rate (Kbit/s)	9.6	50	130	384	2,048+
Theoretical Max. Data Rate (Kbit/s)	14.4	170	384	2,048	14,400

3.2 High Speed Uplink Packet Access (HSUPA)

HSUPA is a 3GPP Release 6 specification within the HSPA family, also referred to as Enhanced Uplink Dedicated Channel (E-DCH) or 3.75G. Its primary objective is to increase uplink data transfer speeds in UMTS evolution technologies, achieving uplink data rates of up to 5.8 Mbps. HSUPA improves symmetric data rate applications such as email, video gaming, and other person-to-person data services.

Unlike HSDPA, HSUPA employs a dedicated channel with separate channels for traffic and signalling to improve all uplink capabilities. It can also be used to support high-quality live streaming, real-time gaming, and DVD-quality content (Enan and Mustafa, 2014). HSUPA enables higher user throughput compared to dedicated channel technologies.

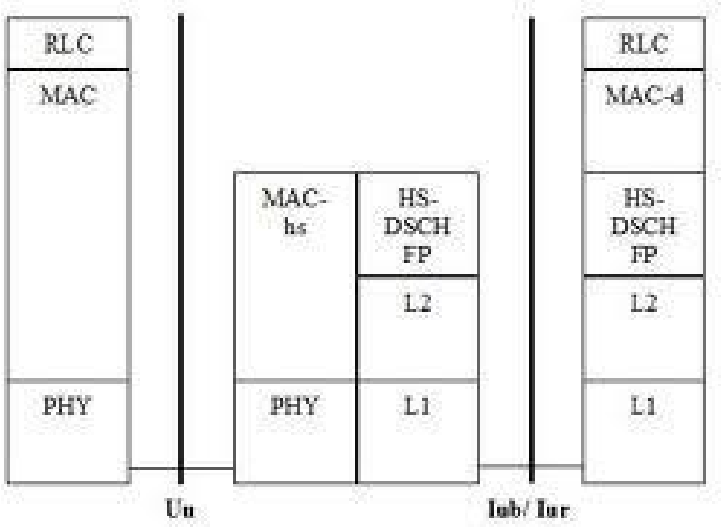

Figure 5: HSUPA Architecture (Abdullah et al., 2014)

Features of HSUPA

- Transmission rate of approximately 5.8 Mbps.
- BPSK modulation method.
- Support for Soft Handover and Hybrid ARQ (HARQ).
- Support for fast packet scheduling with multicode transmission.

Advantages of HSUPA

16. HSUPA significantly improves data transmission rates, enabling faster data delivery and retransmission of failed data, thereby enhancing overall network performance.
17. It supports Soft Handover, enabling the user terminal to combine transmission rate signals from multiple cells. Control signals from Node B cell scheduling are received from each radio link and the transmission rate signals are combined at the user terminal.

3.3 3GPP Releases 7 and 8

3GPP specifications introduced significant enhancements in downlink data rates and capacity in Release 5 (HSDPA), mirrored by corresponding improvements in uplink data rates in Release 6 (HSUPA). Releases 7 and 8 represent further advancement of the HSPA standard (3GPP, 2008). Release 7 is known as HSPA Evolution or HSPA+, while Release 8 falls under the LTE specification.

Release 7 supports a simplified and flatter network architecture with a reduced number of network elements compared to Release 6. Release 8 further enhances radio capabilities and data rates while reducing system latency. The LTE performance target is to provide two to four times the performance of HSPA Release 6. Releases 7 and 8 were developed in parallel with LTE, and certain aspects of LTE work are reflected in the HSPA evolution as well (3GPP, 2008).

Features of 3GPP Releases 7 and 8

- Earlier 3GPP specifications required the mobile device to continuously transmit the physical control channel even when no data was being transferred. In Releases 7 and 8, the mobile terminal discontinues the CCT when no data channel transmission is active, enabling complete transmitter shutdown.
- VoIP capacity is enhanced in Releases 7 and 8. Multiple features have been introduced to improve the efficiency of low-bit-rate, delay-critical applications such as Voice over IP.
- Releases 7 and 8 provide a significantly flatter and more flexible architecture compared to earlier releases. Release 6 has four network elements, while Release 8 (LTE) reduces this to two network elements.

4. Long Term Evolution (LTE): Development, Architecture, and Interfaces

4.1 LTE Overview

LTE (Long Term Evolution) is a 3GPP specification initially proposed in November 2004. It evolved from UMTS, which in turn evolved from GSM. Related specifications, formerly known as E-UTRA (Evolved UMTS Terrestrial Radio Access) and E-UTRAN (Evolved UMTS Terrestrial Radio Access Network), were first formally documented in 3GPP Release 8.

The primary objectives of LTE are to deliver high data rates, low latency, and a packet-optimised radio access technology with flexible bandwidth implementation. Its network architecture is designed to support packet-switched traffic with seamless mobility and high quality of service (Dahlman et al., 2011).

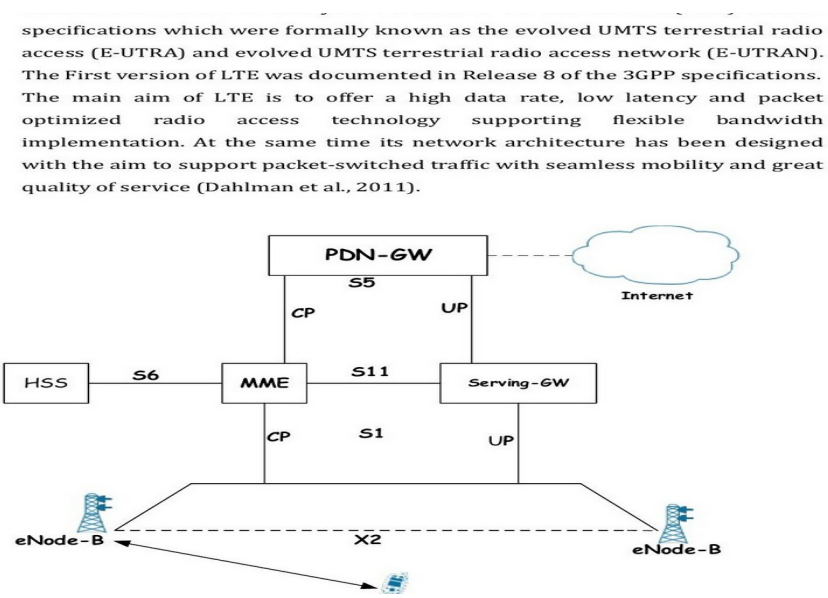

Figure 6: LTE Network Architecture Overview (Sauter, 2011)

4.2 LTE User Equipment and the Uu Interface

In LTE, as in UMTS, mobile devices are referred to as User Equipment (UE). In 3GPP Release 8, five different UE categories were defined. Unlike HSPA, in which devices support a wide range of modulation and coding

schemes due to the iterative evolution of the standard, all LTE UEs support 64-QAM (Quadrature Amplitude Modulation) in the downlink direction and antenna diversity. In the uplink direction, 16-QAM is the minimum requirement.

LTE UE categories 1 through 4 support MIMO (Multiple Input Multiple Output) transmission in the downlink direction. With this advanced transmission scheme, multiple data streams are transmitted simultaneously on the same carrier frequency from multiple base station antennas to multiple antennas in the mobile device. LTE networks and devices currently use 2x2 MIMO (two transmit and two receive antennas), with 4x4 MIMO anticipated for Category 5 UEs. Most LTE mobile devices also support legacy radio technologies such as GSM and UMTS, enabling multi-standard operation across frequency bands (Sauter, 2011).

4.3 The eNode-B and S1 and X2 Interfaces

In the LTE specification, the base station is referred to as the eNode-B, a term derived from the UMTS base station designation Node-B with the prefix 'e' denoting 'evolved'. The equivalent change was also applied to UTRAN, which is now referred to as eUTRAN in LTE networks.

The eNode-B in LTE networks comprises three key elements: antennas; radio modules that modulate and demodulate signals on the air interface; and digital modules that process all signals transmitted and received on the air interface. In LTE, the eNode-B is responsible not only for the air interface but also for general resource management and air interface scheduling. Additional eNode-B functions include:

- QoS enforcement, ensuring latency and minimum bandwidth requirements for real-time users and maximum throughput for relevant applications.
- Load balancing among simultaneous radio network users.
- Mobility management.
- Interference management, minimising the impact of downlink transmissions on neighbouring base stations in cell-edge scenarios.

The S1 interface serves two functions. First, the eNode-B uses S1 to interact with the core network for operational purposes, including network registration, status reporting, and reception of configuration information (Atayero, 2011). Second, S1 is used to transfer signalling messages related to individual users, maintaining connections and coordinating handovers to LTE, UMTS, or GSM base stations.

The X2 interface facilitates direct communication between two eNode-Bs. Its two principal functions are the implementation of handovers, coordinated with the core network, and the coordination of inter-cell interference (Atayero, 2011).

4.4 The Mobility Management Entity (MME)

Since eNode-Bs independently manage users and their radio bearers once established, LTE requires a centralised user database accessible from any location within the home network and from visited networks during roaming (Sauter, 2011). The Mobility Management Entity (MME) is the network node responsible for all signalling exchanges between base stations and the core network, and between users and the core network. Larger networks typically deploy multiple MMEs to manage the volume of signalling.

The MME performs the following functions:

- Authentication: when a subscriber first attaches to the LTE network, the eNode-B communicates with the MME via the S1 interface to exchange authentication information between the mobile device and the MME.

- Establishment of bearers: the MME selects the appropriate gateway router to the Internet without being directly involved in the exchange of user data packets.
- Handover support: in the absence of an available X2 interface, the MME relays handover messages between the two eNode-Bs involved in the handover procedure.
- Interworking with other radio networks: when a mobile device reaches the boundary of LTE coverage, the eNode-B may hand over the device to a GSM or UMTS network. The MME coordinates this operation and communicates with the GSM or UMTS network components accordingly.

4.5 The Serving Gateway and PDN Gateway

Serving Gateway (S-GW): The S-GW manages user data tunnels between eNode-Bs in the radio network and the PDN Gateway (PDN-GW). During a handover, the eNode-B, under the control of the MME and S-GW, transfers the user data tunnel to the new eNode-B.

PDN Gateway (PDN-GW): The PDN-GW is the gateway between the LTE network and the internet. Some network operators also use it to provide access to enterprise intranets via encrypted tunnels. The PDN-GW is also responsible for assigning IP addresses to LTE mobile devices. When a mobile device connects to the network after being switched on, the eNode-B communicates with the MME, which authenticates the subscriber and requests an IP address from the PDN-GW for the device (Sauter, 2011).

Conclusion

Mobile communication continues to evolve at a rapid pace and remains central to both business operations and everyday life. The progression from 1G analogue systems through GSM, UMTS, HSPA, and ultimately LTE demonstrates a consistent trajectory towards higher data rates, lower latency, improved spectral efficiency, and greater architectural simplicity.

With the rapid growth of user demand and the inherent limitations of existing mobile communication technologies, next-generation systems are expected to deliver substantially increased data rates, greater interoperability across communication protocols, and more secure, user-centric applications. The foundational architectural principles and interface definitions established in LTE provide the basis for the continued development of mobile broadband technologies.

References

3GPP Standard (2008). Ultra-Long Term Evolution (LTE) and 3GPP System Architecture Evolution (SAE). March.

Abdullah, O., Enan, M., Babiker, A. and Mustafa, N. (2014). Comparative Study between UMTS, HSDPA and HSUPA. Journal of Electronics and Communication Engineering, 9(4), pp. 21-30.

Atayero, A., Luka, K., Orya, K. and Iruem, J. (2011). 3GPP Long Term Evolution: Architecture, Protocols, and Interface. International Journal of Information and Communication Technology Research (IJICT), November, 1(7).

Chakraborty, A. (2013). A Study on Third Generation Mobile Technology (3G) and Comparison Among All Generations of Mobile Communication. International Journal of Innovative Technology and Adaptive Management (IJITAM), November, 1(2).

Dahlman, E., Parkvall, S. and Skold, J. (2011). 4G LTE/LTE-Advanced for Mobile Broadband. 1st edn. United Kingdom: Elsevier.

Eberspacher, J., Vogel, H., Bettstetter, C. and Hartmann, C. (2009). GSM Architecture, Protocols and Services. 3rd edn. Chichester, United Kingdom: John Wiley and Sons, Ltd.

Enan, M. and Mustafa, N. (2014). Cited in: Abdullah, O., Enan, M., Babiker, A. and Mustafa, N. (2014). Comparative Study between UMTS, HSDPA and HSUPA. Journal of Electronics and Communication Engineering, 9(4), pp. 21-30.

Holma, H. and Toskala, A. (2000). WCDMA for UMTS. Chichester, England: John Wiley and Sons, Ltd.

Holma, H. and Toskala, A. (2006). HSDPA/HSUPA for UMTS: High Speed Radio Access for Mobile Communications. West Sussex, United Kingdom: John Wiley and Sons, Ltd.

Kumar, A., Liu, Y. and Sengupta, J. (2010). Evolution of Mobile Wireless Networks: 1G to 4G. International Journal of Electronics and Communication Technology (IJECT), December, 1(1).

Sauter, M. (2011). From GSM to LTE: An Introduction of Mobile Networks and Mobile Broadband. 2nd edn. West Sussex, United Kingdom: John Wiley and Sons, Ltd.

Sesia, S., Toufik, I. and Baker, M. (2011). LTE: The UMTS Long Term Evolution From Theory to Practice. 2nd edn. West Sussex, United Kingdom: John Wiley and Sons, Ltd.