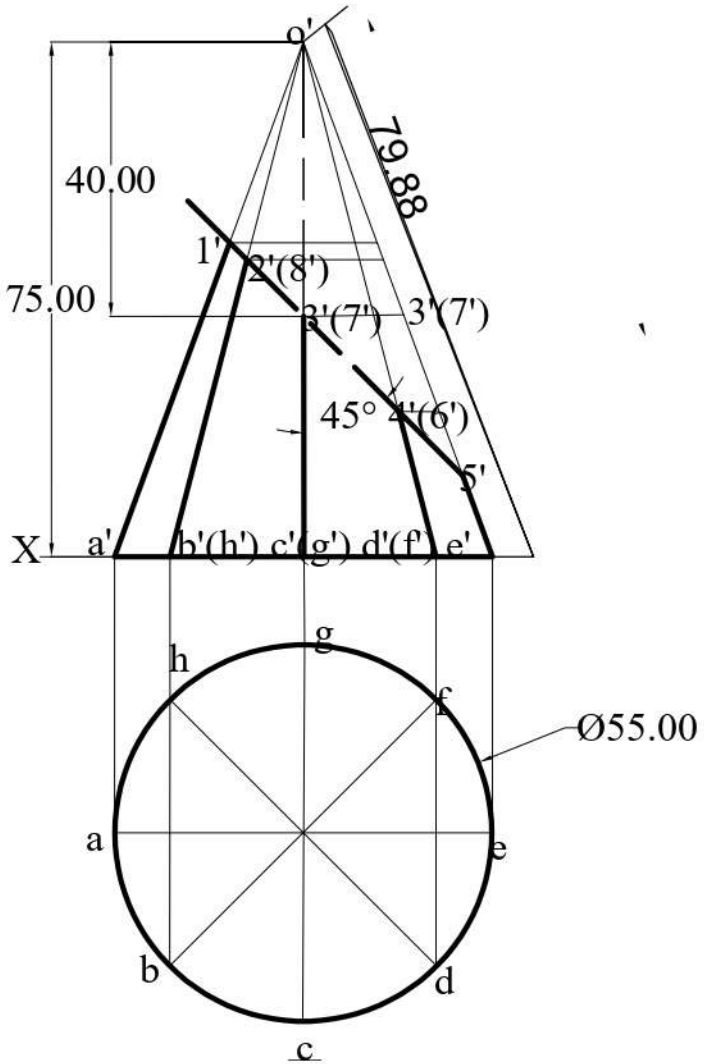
o'
79.88
40.00
1'
2'(8')
75.00
3'(7')
3'(7')
45°
4'(6')
5'
X
a'
b'(h')
c'(g')
d'(f')
e'
g
h
f
Ø55.00
a
e
b
d
c

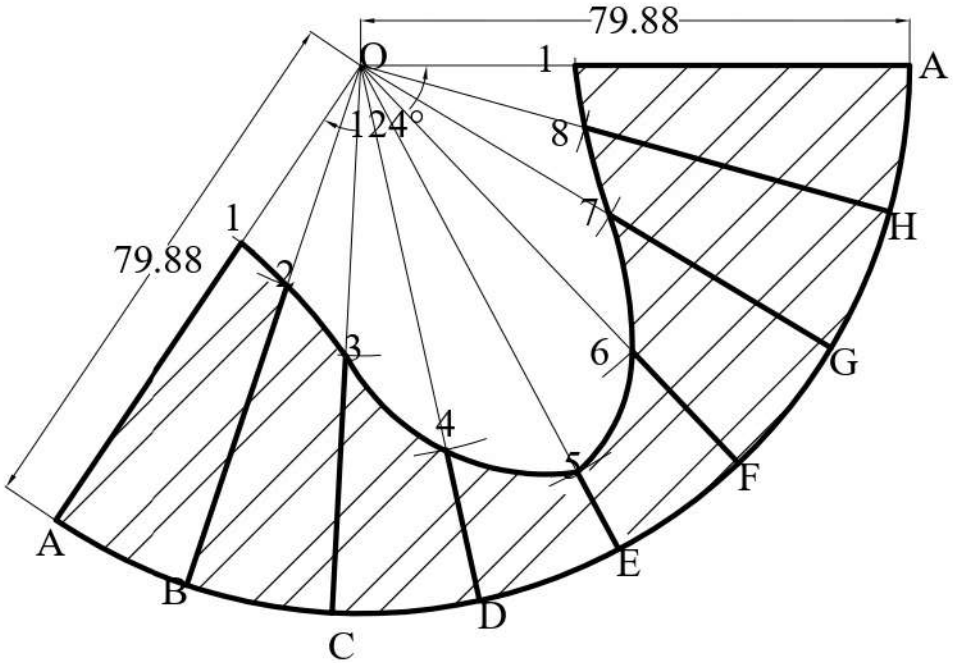
79.88
O
1
A
124°
8
7
H
1
79.88
2
3
6
G
4
5
F
A
E
B
D
C