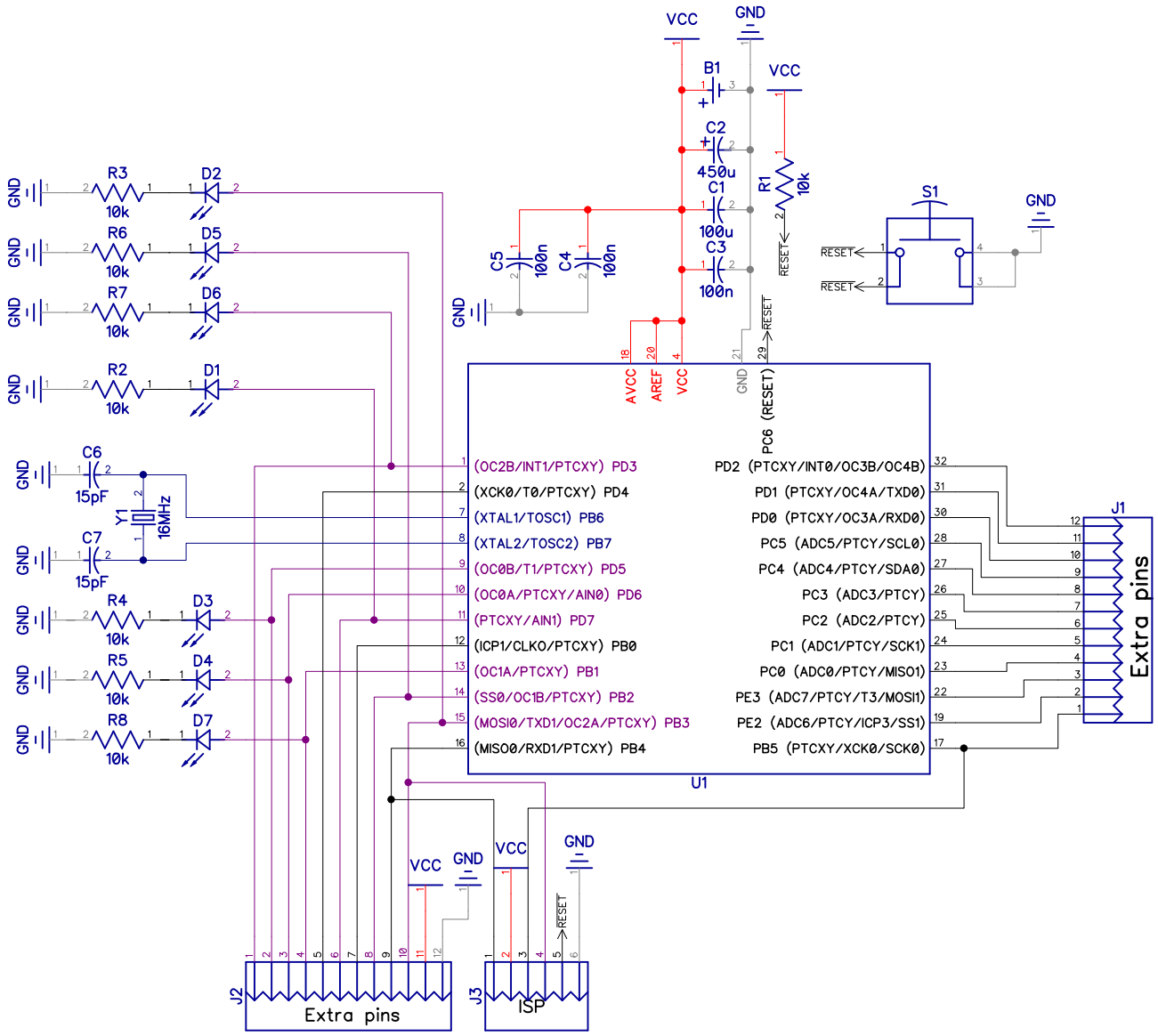

RevNo	Project name	Date	Designed by
4	Disobey Badge	07.11.2016	Heikki Juva