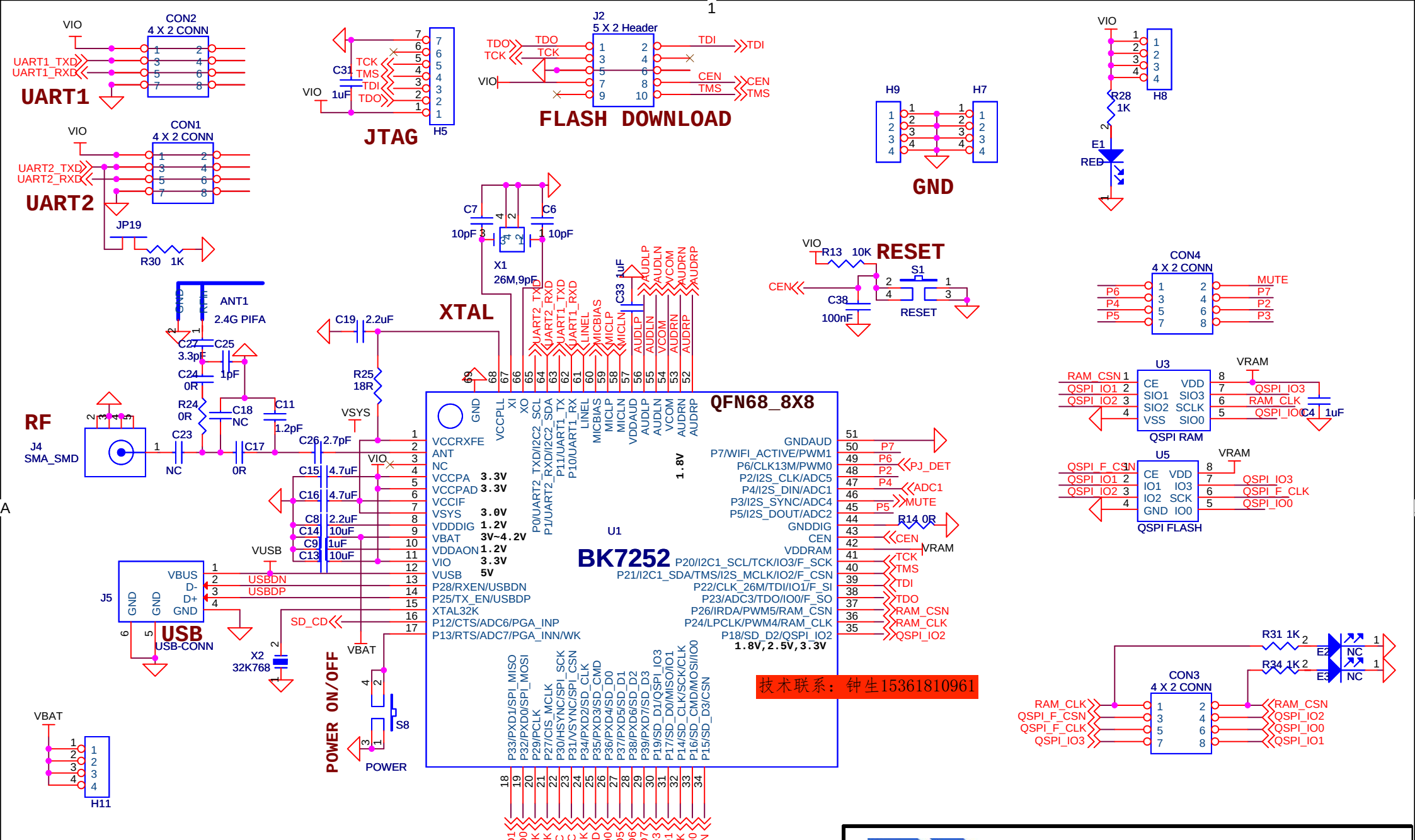

BEKEN CORPORATION
Proprietary and Confidential

TITLE: BK7252 QFN68_8X8		
SIZE: A4	FILENAME: BK7252_QFN68_8X8	REV: 3.0
DRN: Qunshan	CHK: Beken	APPR: Beken
CRD: Monday, August 21, 2017	UPD:Wednesday, April 10, 2019	SHEET: 1 of 1

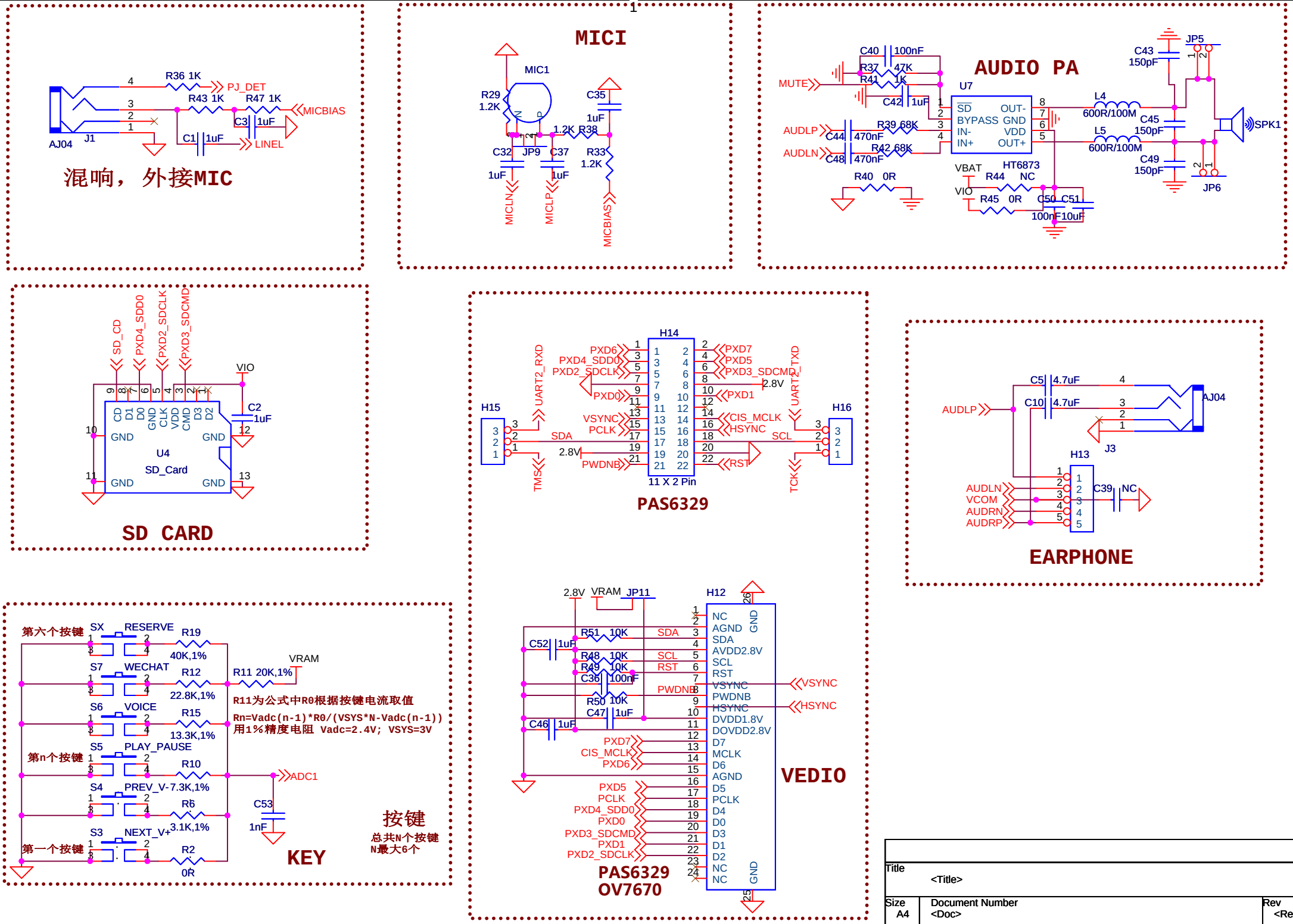
混响，外接MIC
MICI
AUDIO PA
SD CARD
PAS6329
EARPHONE
VEDIO
PAS6329
OV7670
KEY
按键
总共N个按键
N最大6个
R11为公式中R0根据按键电流取值
Rn=Vadc(n-1)*R0/(VSYS*N-Vadc(n-1))
用1%精度电阻 Vadc=2.4V; VSYS=3V
Title
<Title>
Size
A4
Document Number
<Doc>
Rev
<Rev
Date:
Wednesday, April 10, 2019
Sheet
1
of
1