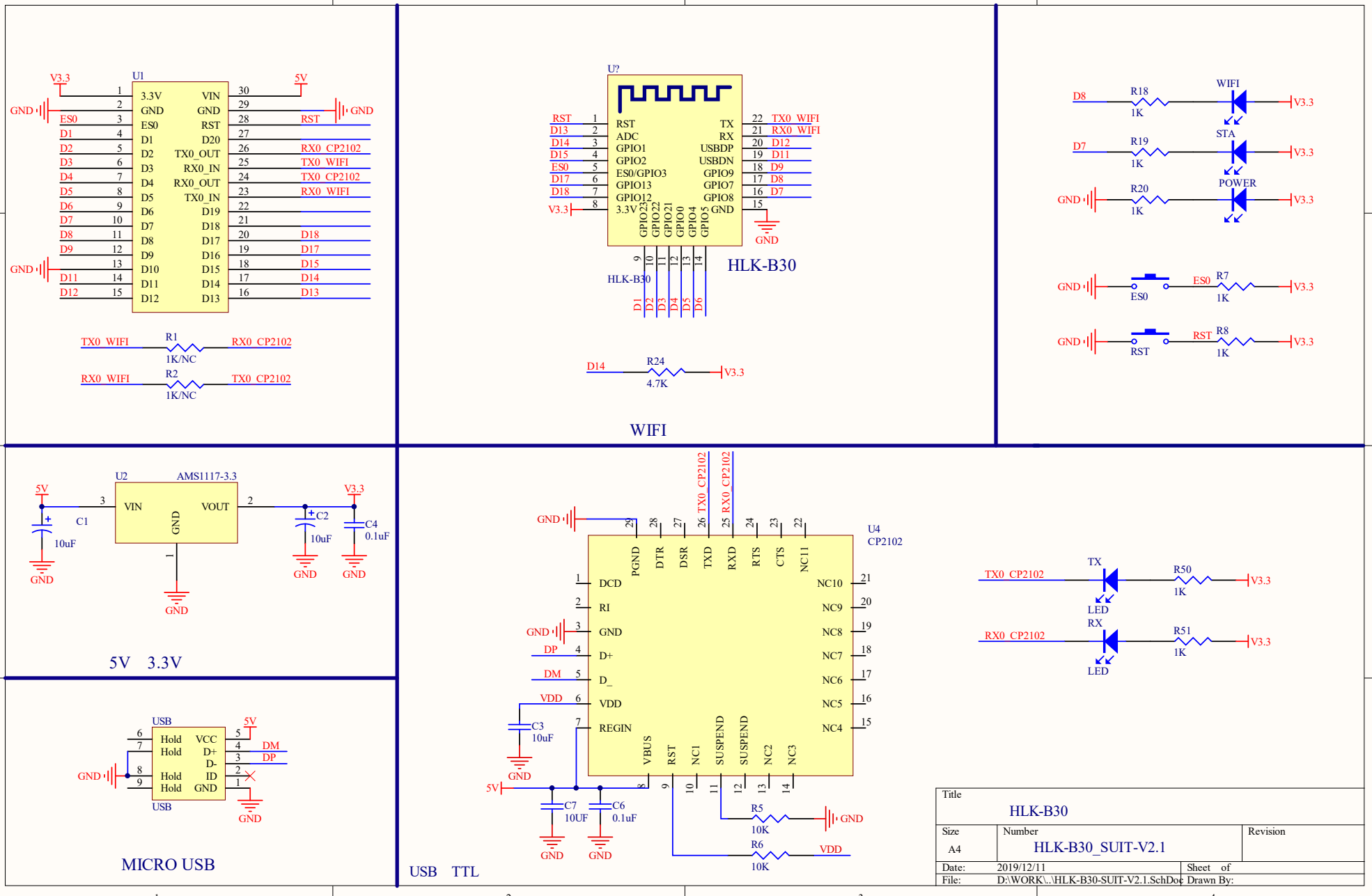

U1
3.3V
GND
ES0
D1
D2
D3
D4
D5
D6
D7
D8
D9
D10
D11
D12
VIN
GND
RST
D20
TX0_OUT
RX0_IN
RX0_OUT
TX0_IN
D19
D18
D17
D16
D15
D14
D13
V3.3
5V
GND
RST
RX0_CP2102
TX0_WIFI
TX0_CP2102
RX0_WIFI
R1
1K/NC
R2
1K/NC
U?
RST
ADC
GPIO1
GPIO2
ES0/GPIO3
GPIO13
GPIO12
3.3V
GPIO23
GPIO22
GPIO21
GPIO0
GPIO4
GPIO5
TX
RX
USBDP
USBDN
GPIO9
GPIO7
GPIO8
GND
HLK-B30
R24
4.7K
WIFI
R18
1K
R19
1K
R20
1K
WIFI
STA
POWER
R7
1K
R8
1K
ES0
RST
U2
AMS1117-3.3
VIN
VOUT
GND
C1
10uF
C2
10uF
C4
0.1uF
5V 3.3V
U4
CP2102
PGND
DTR
DSR
TXD
RXD
RTS
CTS
NC11
DCD
RI
GND
D+
D_
VDD
REGIN
NC10
NC9
NC8
NC7
NC6
NC5
NC4
VBUS
RST
NC1
SUSPEND
SUSPEND
NC2
NC3
DP
DM
C3
10uF
C7
10UF
C6
0.1uF
R5
10K
R6
10K
USB TTL
TX
LED
RX
LED
R50
1K
R51
1K
USB
Hold
VCC
D+
D-
ID
GND
MICRO USB
Title
HLK-B30
Size
A4
Number
HLK-B30_SUIT-V2.1
Revision
Date: 2019/12/11
Sheet of
File: D:\WORK\..\HLK-B30-SUIT-V2.1.SchDoc
Drawn By: