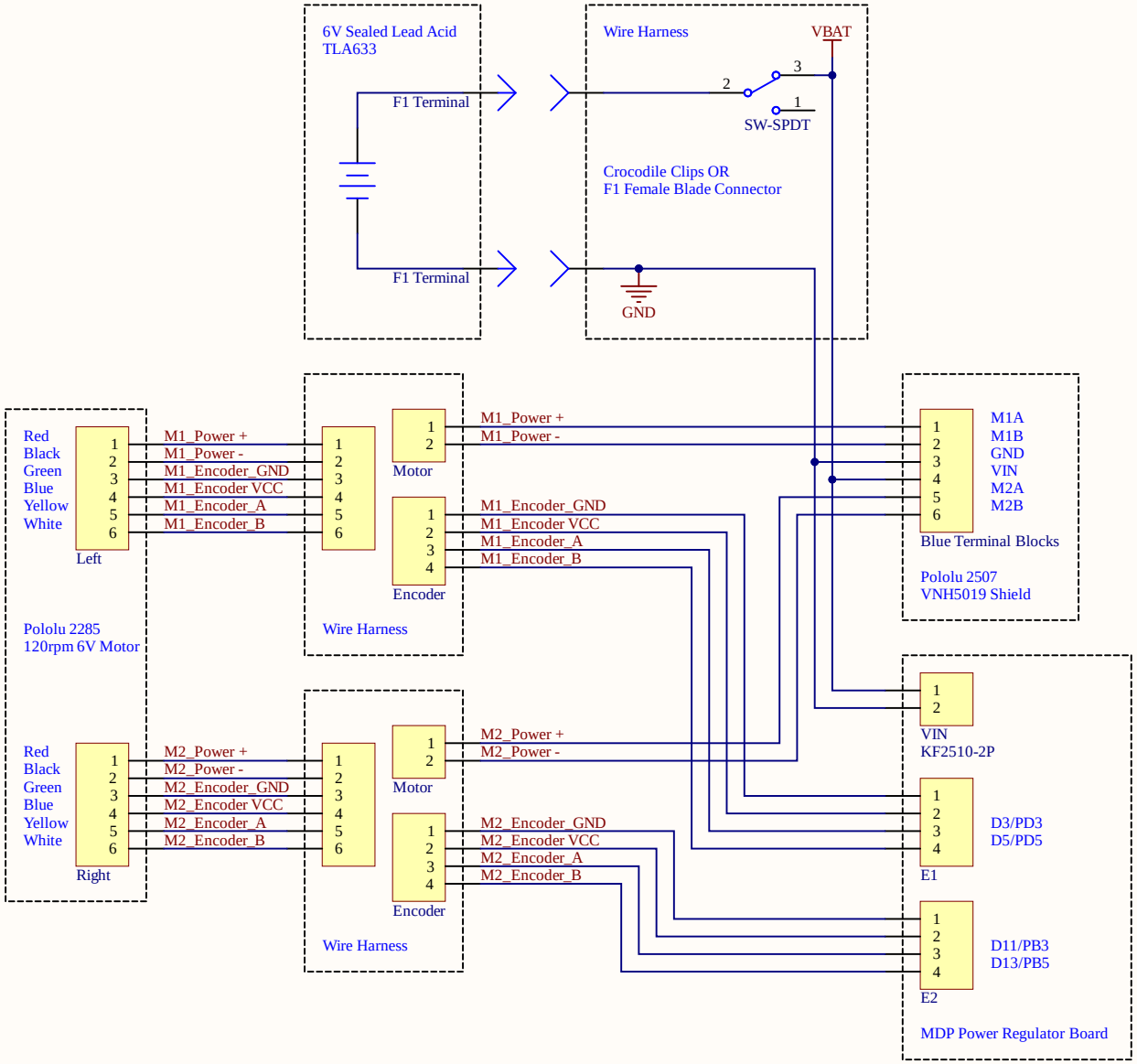

Title	Motor Wiring Diagram	
Size A4	Number	Revision 1
Date: 1/15/2021		Sheet of
File: D:\Dropbox\..\Schematics.SchDoc		Drawn By: Justin Ong