RGBW Color Sensor With I²C Interface

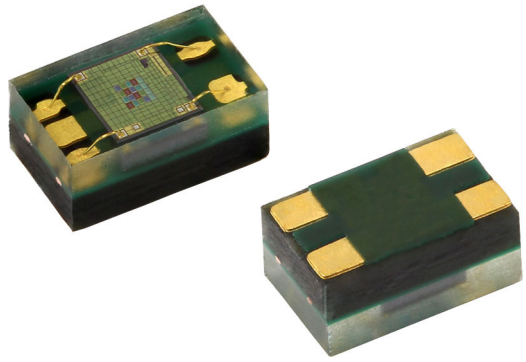

FEATURES

- Package type: surface mount
- Dimensions (L x W x H in mm): 2.0 x 1.25 x 1.0
- Integrated modules: color sensor (RGBW) and signal conditioning IC
- Filtron™ technology provides a spectrum matching real human eye responses
- Supports low transmittance (dark) lens design
- Fluorescent light flicker immunity
- Provides 16-bit resolution for each channel (R, G, B, W)
- Selectable maximum detection range (515.4, 1031, 2062, 4124, 8248, or 16 496) lux with highest sensitivity 0.007865 lux/step
- Package: OPLGA
- Temperature compensation: -40 °C to +85 °C
- Low power consumption I²C (SMBus compatible) interface
- Floor life: 168 h, MSL 3, according to J-STD-020
- Output type: I²C bus
- Operation voltage: 2.5 V to 3.6 V
- Material categorization: for definitions of compliance please see www.vishay.com/doc?99912

Pb-free
e4
RoHS COMPLIANT
HALOGEN FREE
GREEN (5-2008)

DESCRIPTION

VEML6040 color sensor senses red, green, blue, and white light and incorporates photodiodes, amplifiers, and analog / digital circuits into a single chip using CMOS process. With the color sensor applied, the brightness, and color temperature of backlight can be adjusted base on ambient light source that makes panel looks more comfortable for end user's eyes. VEML6040's adoption of Filtron™ technology achieves the closest ambient light spectral sensitivity to real human eye responses.

VEML6040 provides excellent temperature compensation capability for keeping the output stable under changing temperature. VEML6040's function are easily operated via the simple command format of I²C (SMBus compatible) interface protocol. VEML6040's operating voltage ranges from 2.5 V to 3.6 V. VEML6040 is packaged in a lead (Pb)-free 4 pin OPLGA package which offers the best market-proven reliability.

APPLICATIONS

- Handheld device
- Notebook
- Consumer device
- Industrial and mechanical application

PRODUCT SUMMARY

PART NUMBER	OPERATING VOLTAGE RANGE (V)	I²C BUS VOLTAGE RANGE (V)	PEAK SENSITIVITY (nm)	RANGE OF SPECTRAL BANDWIDTH $\Lambda_{0.5}$ (nm)	OUTPUT CODE
VEML6040	2.5 to 3.6	1.7 to 3.6	650, 550, 450 (R, G, B)	± 35, ± 35, ± 40 (R, G, B)	16 bit, I²C

Note

(1) Adjustable through I²C interface

ORDERING INFORMATION

ORDERING CODE	PACKAGING	VOLUME (1)	REMARKS
VEML6040A3OG	Tape and reel	MOQ: 2500 pcs	2.0 mm x 1.25 mm x 1.0 mm

Note

(1) MOQ: minimum order quantity

For technical questions, contact: consumersensors@vishay.com
THIS DOCUMENT IS SUBJECT TO CHANGE WITHOUT NOTICE. THE PRODUCTS DESCRIBED HEREIN AND THIS DOCUMENT ARE SUBJECT TO SPECIFIC DISCLAIMERS, SET FORTH AT www.vishay.com/doc?91000

ABSOLUTE MAXIMUM RATINGS (T_{amb} = 25 °C, unless otherwise specified)					
PARAMETER	**TEST CONDITION**	**SYMBOL**	**MIN.**	**MAX.**	**UNIT**
Supply voltage		V_{DD}	0	3.6	V
Operation temperature range		T_{amb}	-40	+85	°C
Storage temperature range		T_{stg}	-40	+85	°C

RECOMMENDED OPERATING CONDITIONS (T_{amb} = 25 °C, unless otherwise specified)					
PARAMETER	**TEST CONDITION**	**SYMBOL**	**MIN.**	**MAX.**	**UNIT**
Supply voltage		V_{DD}	2.5	3.6	V
Operation temperature range		T_{amb}	-40	+85	°C
I^2C bus operating frequency		$f_{(I2CCLK)}$	10	400	kHz

PIN DESCRIPTIONS			
PIN ASSIGNMENT	**SYMBOL**	**TYPE**	**FUNCTION**
1	GND	I	Ground
2	SDAT	I / O (open drain)	I^2C data bus data input / output
3	SCLK	I	I^2C digital bus clock input
4	V_{DD}	I	Power supply input

BLOCK DIAGRAM

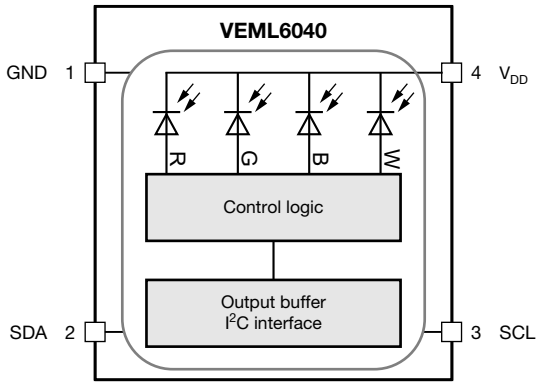

THIS DOCUMENT IS SUBJECT TO CHANGE WITHOUT NOTICE. THE PRODUCTS DESCRIBED HEREIN AND THIS DOCUMENT ARE SUBJECT TO SPECIFIC DISCLAIMERS, SET FORTH AT www.vishay.com/doc?91000

BASIC CHARACTERISTICS (T_{amb} = 25 °C, unless otherwise specified)							
PARAMETER		**TEST CONDITION**	**SYMBOL**	**MIN.**	**TYP.**	**MAX.**	**UNIT**
Supply voltage			V_{DD}	2.5	-	3.6	V
Supply current			I_{DD}	-	200	-	µA
I^2C signal input	Logic high	V_{DD} = 3.3 V	V_{IH}	1.5	-	-	V
	Logic low		V_{IL}	-	-	0.8	
	Logic high	V_{DD} = 2.6 V	V_{IH}	1.4	-	-	V
	Logic low		V_{IL}	-	-	0.6	
Peak sensitivity wavelength			λ_{PR}	-	650	-	nm
			λ_{PG}	-	550	-	nm
			λ_{PB}	-	450	-	nm
Irradiance responsivity		λ_{PR} = 619 nm (3)		-	96	-	counts/(µW/cm²)
		λ_{PG} = 518 nm (3)		-	74	-	
		λ_{PB} = 467 nm (3)		-	56	-	
Detectable intensity	Minimum	G channel, I_T = 1280 ms (1)(2)		-	0.007865	-	lx
	Maximum	G channel, I_T = 40 ms (1)(2)		-	16 496	-	
Dark offset		G channel, I_T = 80 ms (1)		0	-	3	
Operating temperature range			T_{amb}	-40	-	+85	°C
Shutdown current		Light condition = dark, V_{DD} = 3.6 V	I_{DD}	-	800	-	nA

Notes

(1) Test condition: V_{DD} = 3.3 V, temperature: 25 °C
(2) Light source: white LED
(3) LED spectrum given in fig. 1; IT = 160 ms

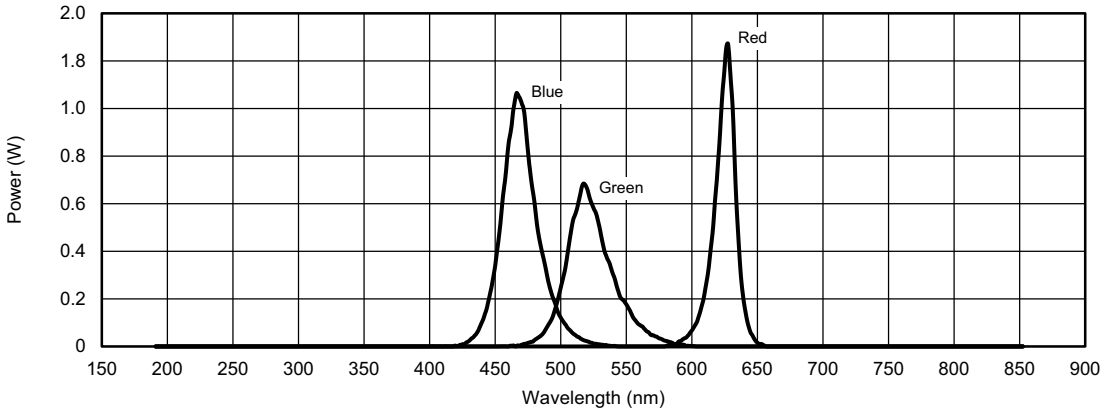

Fig. 1 - Normalized Spectral Response of Used LEDs for Measuring the Irradiance Responsivity

For technical questions, contact: consumersensors@vishay.com
THIS DOCUMENT IS SUBJECT TO CHANGE WITHOUT NOTICE. THE PRODUCTS DESCRIBED HEREIN AND THIS DOCUMENT ARE SUBJECT TO SPECIFIC DISCLAIMERS, SET FORTH AT www.vishay.com/doc?91000

I²C BUS TIMING CHARACTERISTICS (T_{amb} = 25 °C, unless otherwise specified)						
PARAMETER	**SYMBOL**	**STANDARD MODE**		**FAST MODE**		**UNIT**
		MIN.	**MAX.**	**MIN.**	**MAX.**	
Clock frequency	$f_{(SMBCLK)}$	10	100	10	400	kHz
Bus free time between start and stop condition	$t_{(BUF)}$	4.7	-	1.3	-	µs
Hold time after (repeated) start condition; after this period, the first clock is generated	$t_{(HDSTA)}$	4.0	-	0.6	-	µs
Repeated start condition setup time	$t_{(SUSTA)}$	4.7	-	0.6	-	µs
Stop condition setup time	$t_{(SUSTO)}$	4.0	-	0.6	-	µs
Data hold time	$t_{(HDDAT)}$	300	-	90	-	ns
Data setup time	$t_{(SUDAT)}$	250	-	100	-	ns
I²C clock (SCK) low period	$t_{(LOW)}$	4.7	-	1.3	-	µs
I²C clock (SCK) high period	$t_{(HIGH)}$	4.0	-	0.6	-	µs
Detect clock / data low timeout	$t_{(TIMEOUT)}$	25	35	-	-	ms
Clock / data fall time	$t_{(F)}$	-	300	-	300	ns
Clock / data rise time	$t_{(R)}$	-	1000	-	300	ns

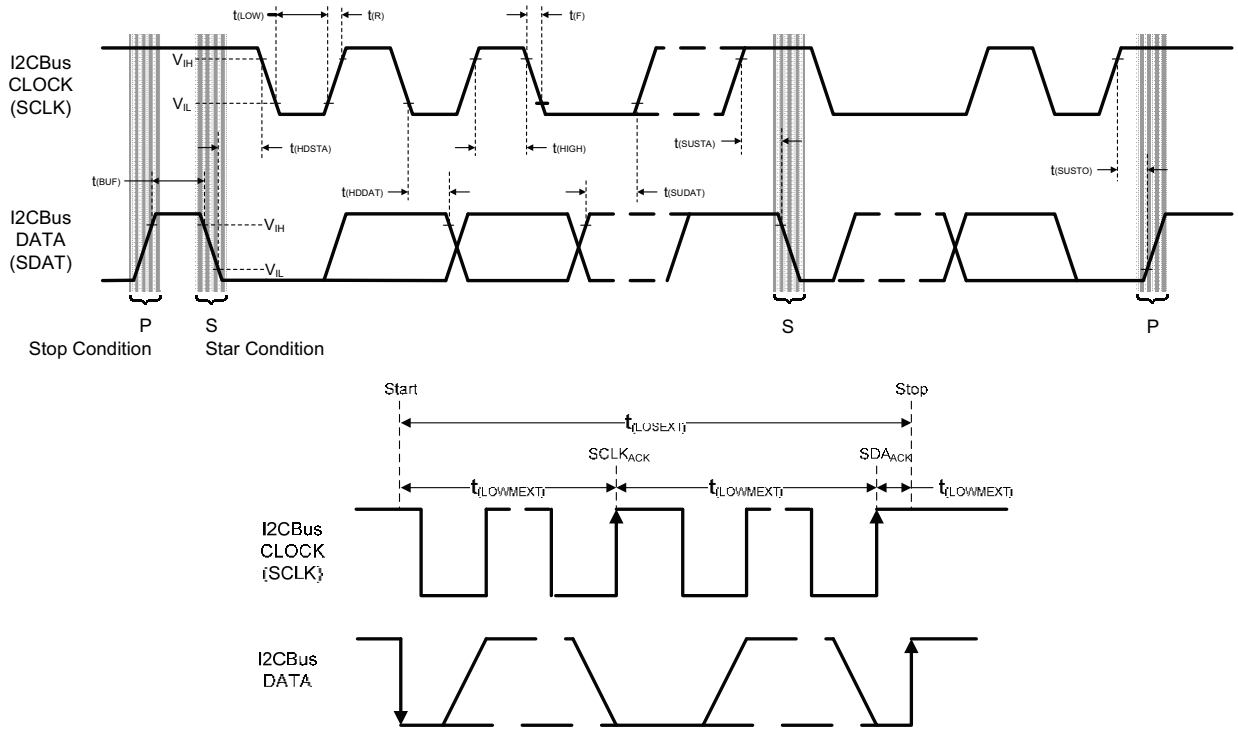

Fig. 2 - I²C Bus Timing Diagram

For technical questions, contact: consumersensors@vishay.com
THIS DOCUMENT IS SUBJECT TO CHANGE WITHOUT NOTICE. THE PRODUCTS DESCRIBED HEREIN AND THIS DOCUMENT ARE SUBJECT TO SPECIFIC DISCLAIMERS, SET FORTH AT www.vishay.com/doc?91000

PARAMETER TIMING INFORMATION

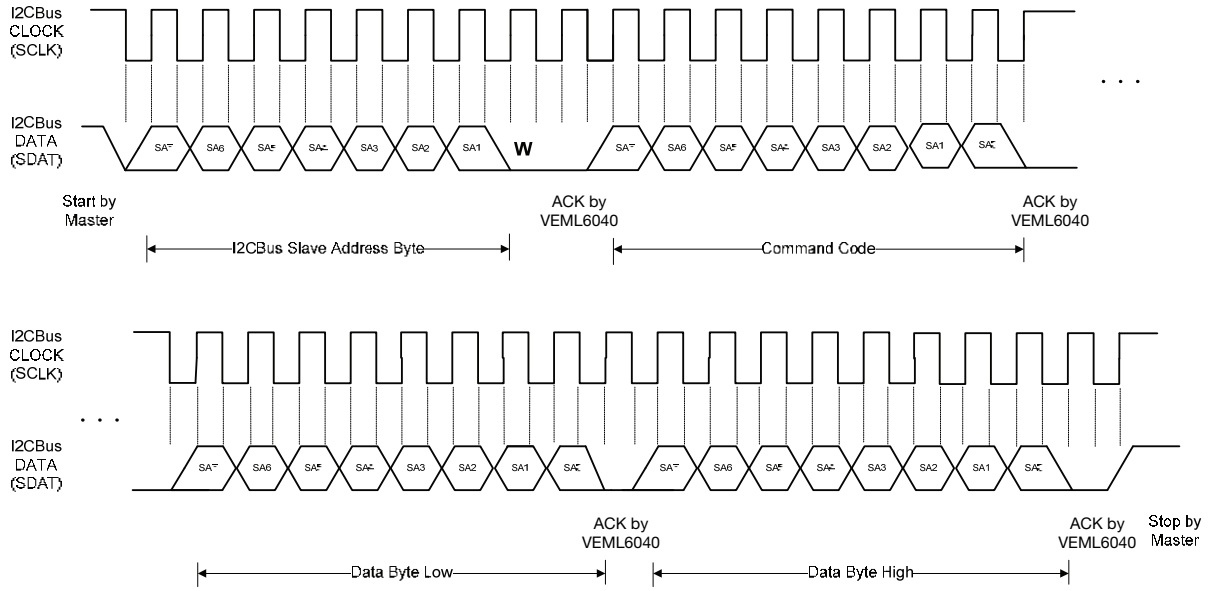

Fig. 3 - I²C Bus Timing for Sending Word Command Format

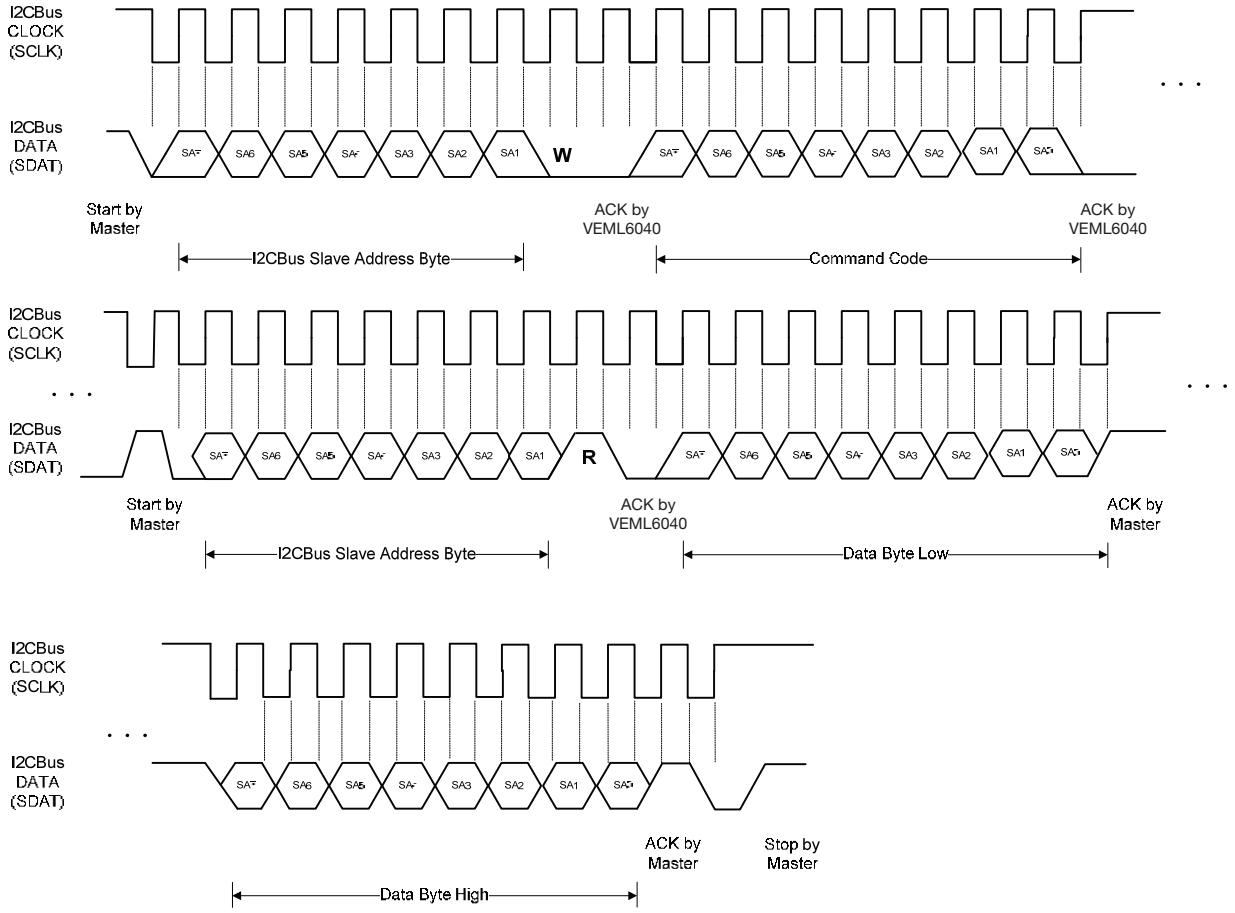

Fig. 4 - I²C Bus Timing for Receiving Word Command Format

For technical questions, contact: consumersensors@vishay.com
THIS DOCUMENT IS SUBJECT TO CHANGE WITHOUT NOTICE. THE PRODUCTS DESCRIBED HEREIN AND THIS DOCUMENT ARE SUBJECT TO SPECIFIC DISCLAIMERS, SET FORTH AT www.vishay.com/doc?91000

TYPICAL PERFORMANCE CHARACTERISTICS (T_{amb} = 25 °C, unless otherwise specified)

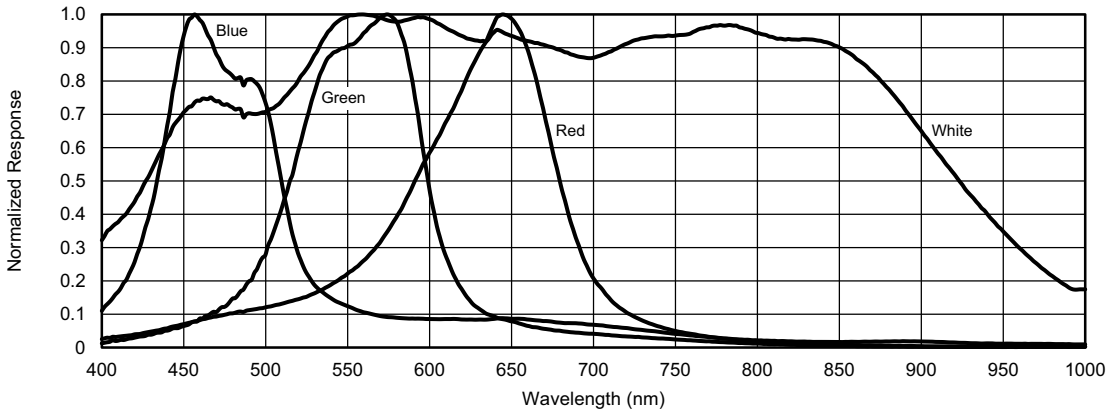

Fig. 5 - Normalized Spectral Response

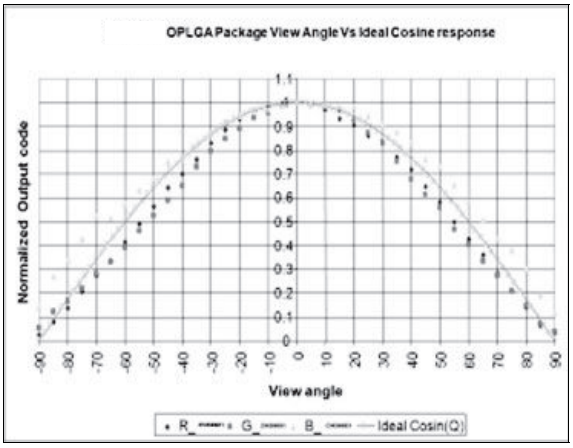

Fig. 6 - Normalized Output vs. View Angle

APPLICATION INFORMATION

Pin Connection with the Host

VEML6040 integrates R, G, B, and W sensor together with I²C interface. It is very easy for the baseband (CPU) to access VEML6040 output data via I²C interface without extra software algorithms. The hardware schematic is shown in the following diagram.

The 0.1 µF capacitor near the V_{DD} pin is used for power supply noise rejection. The 2.2 kΩs are suitable for the pull-up resistors of I²C.

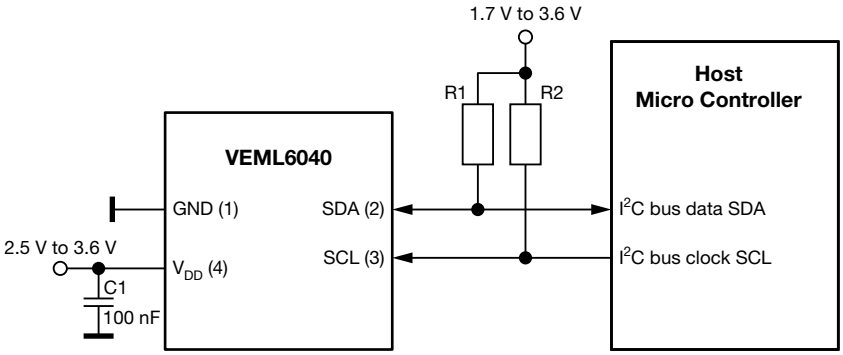

Fig. 7 - Hardware Pin Connection Diagram

For technical questions, contact: consumersensors@vishay.com
THIS DOCUMENT IS SUBJECT TO CHANGE WITHOUT NOTICE. THE PRODUCTS DESCRIBED HEREIN AND THIS DOCUMENT ARE SUBJECT TO SPECIFIC DISCLAIMERS, SET FORTH AT www.vishay.com/doc?91000

Digital Interface

The VEML6040 contains a CONF register (00h) used for operation control and parameter setup. Measurement results are stored in four separate registers, one each for red, green, blue, and white respectively (08h to 0Bh). All registers are accessible via I^2C communication. Figure 8 shows the basic I^2C communication with the VEML6040. Each of the registers in the VEML6040 are 16 bit wide, so 16 bit should be written when a write command is sent, and 16 bit should be read when a read command is sent.

The built in I^2C interface is compatible with I^2C modes “standard” and “fast”: 100 kHz to 400 kHz

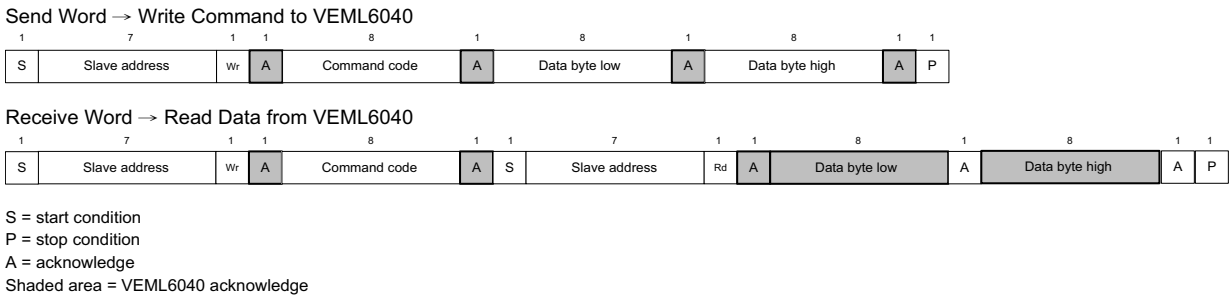

Fig. 8 - Command Protocol Format

Note

- Please note the repeat start condition when data is read from the sensor. A stop condition should not be sent here.

Slave Address and Function Description

VEML6040 uses 10h slave address for 7-bit I^2C addressing protocol. VEML6040 has 16-bit resolution for each channel (R, G, B, and W) that provides sensitivity up to 0.0056 lux/step for G, which is advantageous under a low transmittance lens design (dark lens).

TABLE 1 - SLAVE ADDRESS AND COMMAND CODE DESCRIPTION

SLAVE ADDRESS 0x10											
COMMAND CODE	DATE BYTE LOW / HIGH	REGISTER NAME	R / W	BIT							
				7	6	5	4	3	2	1	0
00h	L	CONF	R / W	0	IT (2 : 0)			0	TRIG	AF	SD
	H	Reserved	R / W	Reserved							
01h to 07h	L	Reserved	R / W	Reserved							
	H	Reserved	R / W	Reserved							
08h	L	R_DATA	R	R_Data (7 : 0)							
	H	R_DATA	R	R_Data (15 : 8)							
09h	L	G_DATA	R	G_Data (7 : 0)							
	H	G_DATA	R	G_Data (15 : 8)							
0Ah	L	B_DATA	R	B_Data (7 : 0)							
	H	B_DATA	R	B_Data (15 : 8)							
0Bh	L	W_DATA	R	W_Data (7 : 0)							
	H	W_DATA	R	W_Data (15 : 8)							

Note

- Slave address is 7-bit addressing protocol

For technical questions, contact: consumersensors@vishay.com
THIS DOCUMENT IS SUBJECT TO CHANGE WITHOUT NOTICE. THE PRODUCTS DESCRIBED HEREIN AND THIS DOCUMENT ARE SUBJECT TO SPECIFIC DISCLAIMERS, SET FORTH AT www.vishay.com/doc?91000

Configuration Register Format

VEML6040 has a 16-bit configuration register for controlling. The description of each command format is shown in the following tables.

TABLE 2-1 - COMMAND CODE 00H BITS DESCRIPTION

SLAVE ADDRESS: 0x10; REGISTER NAME: CONF; COMMAND CODE: 00H / DATA BYTE LOW							
X	IT			X	TRIG	AF	SD
BIT 7	BIT 6	BIT 5	BIT 4	BIT 3	BIT 2	BIT 1	BIT 0
0	IT2	IT1	IT0	0	TRIG	AF	SD

DESCRIPTION	
IT	Integration time setting
TRIG	Proceed one detecting cycle at manual force mode
AF	Auto / manual force mode
SD	Chip shutdown setting

TABLE 2-2 - COMMAND CODE 00H REGISTER SETTING

BITS SETTING	DESCRIPTION		BITS SETTING	DESCRIPTION
BIT 7	Default = 0		BIT 3	Default = 0
BIT 6, 5, 4 IT (2 : 0)	(0 : 0 : 0) = 40 ms		BIT 2 TRIG	0 = no trigger
	(0 : 0 : 1) = 80 ms			1 = trigger one time detect cycle
	(0 : 1 : 0) = 160 ms		BIT 1 AF	0 = auto mode
	(0 : 1 : 1) = 320 ms			1 = force mode
	(1 : 0 : 0) = 640 ms		BIT 0 SD	0 = enable color sensor
	(1 : 0 : 1) = 1280 ms			1 = disable color sensor

TABLE 3-1 - RESERVE COMMAND CODE DESCRIPTION

RESERVED		COMMAND CODE: 00H / DATA BYTE HIGH
Command	Bit	Description
Reserved	7 : 0	Default = 0x00

TABLE 3-2 - RESERVE COMMAND CODE DESCRIPTION

RESERVED		COMMAND CODE: 01H TO 07H
Command	Bit	Description
Reserved	7 : 0	Default = 0x00

TABLE 4 - READ OUT COMMAND CODE DESCRIPTION

REGISTER	COMMAND CODE	BIT	DESCRIPTION
R_DATA	0x08_L (08H data byte low)	7 : 0	0x00 to 0xFF, R channel LSB output data
	0x08_H (08H data byte high)	7 : 0	0x00 to 0xFF, R channel MSB output data
G_DATA	0x09_L (09H data byte low)	7 : 0	0x00 to 0xFF, G channel LSB output data
	0x09_H (09H data byte high)	7 : 0	0x00 to 0xFF, G channel MSB output data
B_DATA	0x0A_L (0AH data byte low)	7 : 0	0x00 to 0xFF, B channel LSB output data
	0x0A_H (0AH data byte high)	7 : 0	0x00 to 0xFF, B channel MSB output data
W_DATA	0x0B_L (0BH data byte low)	7 : 0	0x00 to 0xFF, W channel LSB output data
	0x0B_H (0BH data byte high)	7 : 0	0x00 to 0xFF, W channel MSB output data

For technical questions, contact: consumersensors@vishay.com
THIS DOCUMENT IS SUBJECT TO CHANGE WITHOUT NOTICE. THE PRODUCTS DESCRIBED HEREIN AND THIS DOCUMENT ARE SUBJECT TO SPECIFIC DISCLAIMERS, SET FORTH AT www.vishay.com/doc?91000

Data Access

Each of the R, G, B, and W result registers has a 16-bit resolution (2 bytes). One byte is the LSB and the other byte is the MSB. The host needs to follow the read word protocol as shown in figure 7. The data format shows as below.

TABLE 5 - 16-BIT DATA FORMAT

	VEML6040 16-BIT DATA FORMAT															
Data bit	15	14	13	12	11	10	9	8	7	6	5	4	3	2	1	0
Data byte low									◄	►						
Data byte high	◄	►														

Note

S	Slave address	Wr	A	Command code	A	S	Slave address	Rd	A	Data byte low	A	Data byte high	A	P

- Data byte low represents LSB and data byte high represents MSB.

The integration time settings result in the corresponding resolutions that are shown in table 6.

TABLE 6 - G CHANNEL RESOLUTION AND MAXIMUM DETECTION RANGE

IT SETTINGS		G SENSITIVITY	MAX. DETECTABLE LUX
IT (2 : 0)	INTEGRATION TIME		
(0 : 0 : 0)	40 ms	0.25168	16 496
(0 : 0 : 1)	80 ms	0.12584	8248
(0 : 1 : 0)	160 ms	0.06292	4124
(0 : 1 : 1)	320 ms	0.03146	2062
(1 : 0 : 0)	640 ms	0.01573	1031
(1 : 0 : 1)	1280 ms	0.007865	515.4

Data Auto-Memorization

VEML6040 keeps the last results read. These values will remain in the registers, and can be read from these registers, until the device wakes up and a new measurement is made.

Lux and CCT Calculation

In order to use the results to calculate the lux or correlated color temperature, please refer to the “Designing the VEML6040 into an Application” application note (www.vishay.com/doc?84331).

THIS DOCUMENT IS SUBJECT TO CHANGE WITHOUT NOTICE. THE PRODUCTS DESCRIBED HEREIN AND THIS DOCUMENT ARE SUBJECT TO SPECIFIC DISCLAIMERS, SET FORTH AT www.vishay.com/doc?91000

PACKAGE INFORMATION in millimeters

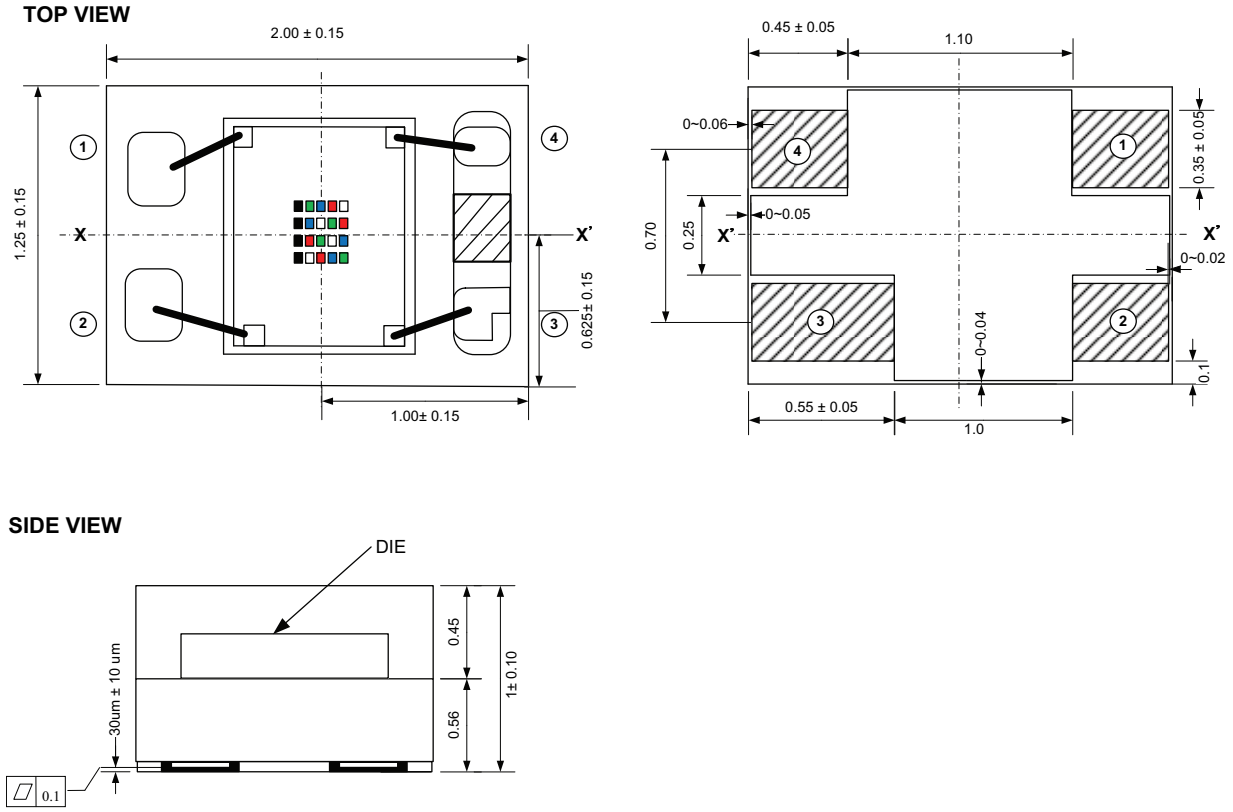

Fig. 9 - VEML6040 A3OG Package Dimensions

LAYOUT NOTICE AND REFERENCE CIRCUIT in millimeters

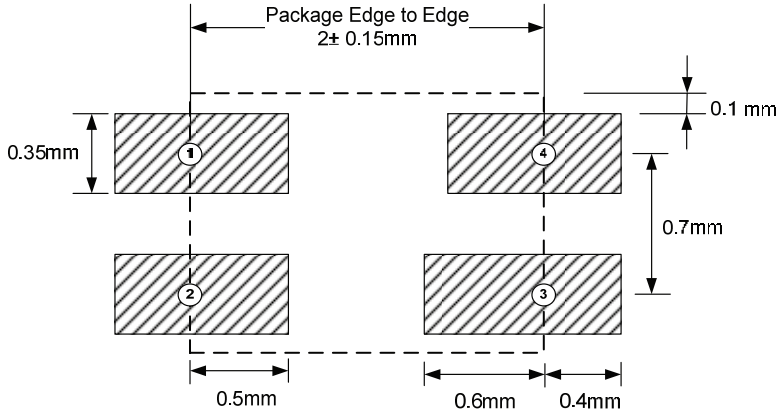

Fig. 10 - VEML6040 PCB Layout Footprint

RECOMMENDED STORAGE AND REBAKING CONDITIONS				
PARAMETER	**CONDITIONS**	**MIN.**	**MAX.**	**UNIT**
Storage temperature		5	50	°C
Relative humidity		-	60	%
Open time		-	168	h
Total time	From the date code on the aluminized envelope (unopened)	-	12	months
Rebaking	Tape and reel: 60 °C	-	22	h
	Tube: 60 °C	-	22	h

For technical questions, contact: consumersensors@vishay.com
THIS DOCUMENT IS SUBJECT TO CHANGE WITHOUT NOTICE. THE PRODUCTS DESCRIBED HEREIN AND THIS DOCUMENT ARE SUBJECT TO SPECIFIC DISCLAIMERS, SET FORTH AT www.vishay.com/doc?91000

RECOMMENDED INFRARED REFLOW

Soldering conditions which are based on J-STD-020 C

IR REFLOW PROFILE CONDITION			
PARAMETER	**CONDITIONS**	**TEMPERATURE**	**TIME**
Peak temperature		255 °C + 0 °C / - 5 °C (max.: 260 °C)	10 s
Preheat temperature range and timing		150 °C to 200 °C	60 s to 180 s
Timing within 5 °C to peak temperature		-	10 s to 30 s
Timing maintained above temperature / time		217 °C	60 s to 150 s
Timing from 25 °C to peak temperature		-	8 min (max.)
Ramp-up rate		3 °C/s (max.)	-
Ramp-down rate		6 °C/s (max.)	-

Recommend Normal Solder Reflow is 235 °C to 255 °C

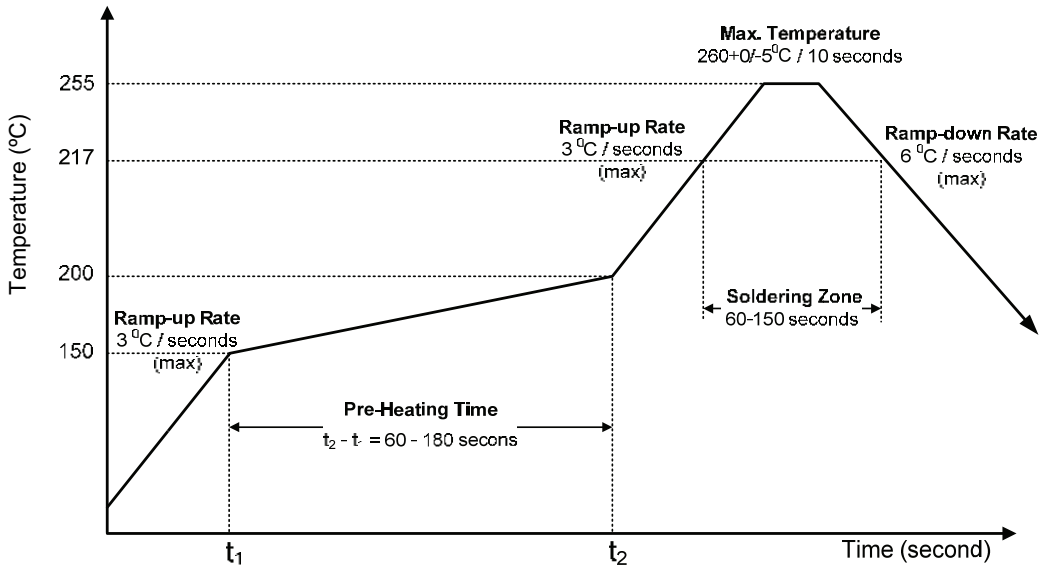

Fig. 11 - VEML6040 OPLGA Solder Reflow Profile Chart

RECOMMENDED IRON TIP SOLDERING CONDITION AND WARNING HANDLING

1. Solder the device with the following conditions:
   1.1. Soldering temperature: 400 °C (max.)
   1.2. Soldering time: 3 s (max.)
2. If the temperature of the method portion rises in addition to the residual stress between the leads, the possibility that an open or short circuit occurs due to the deformation or destruction of the resin increases.
3. The following methods: VPS and wave soldering, have not been suggested for the component assembly.
4. Cleaning method conditions:
   4.1. Solvent: methyl alcohol, ethyl alcohol, isopropyl alcohol
   4.2. Solvent temperature < 45 °C (max.)
   4.3. Time: 3 min (min.)

For technical questions, contact: consumersensors@vishay.com
THIS DOCUMENT IS SUBJECT TO CHANGE WITHOUT NOTICE. THE PRODUCTS DESCRIBED HEREIN AND THIS DOCUMENT ARE SUBJECT TO SPECIFIC DISCLAIMERS, SET FORTH AT www.vishay.com/doc?91000

TAPE PACKAGING INFORMATION in millimeters

DIMENSION OF CARRIER TAPE

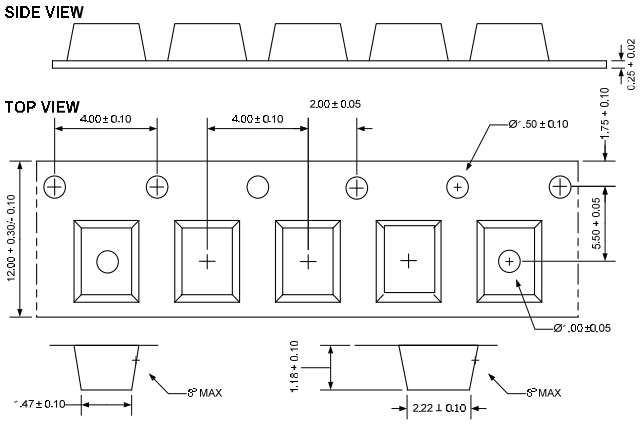

Fig. 12 - VEML6040 A3OG Package Carrier Tape

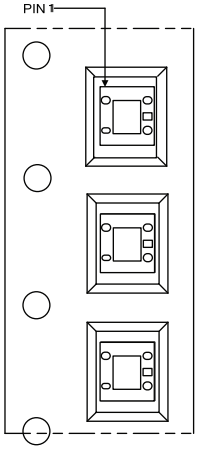

Fig. 13 - Taping Direction

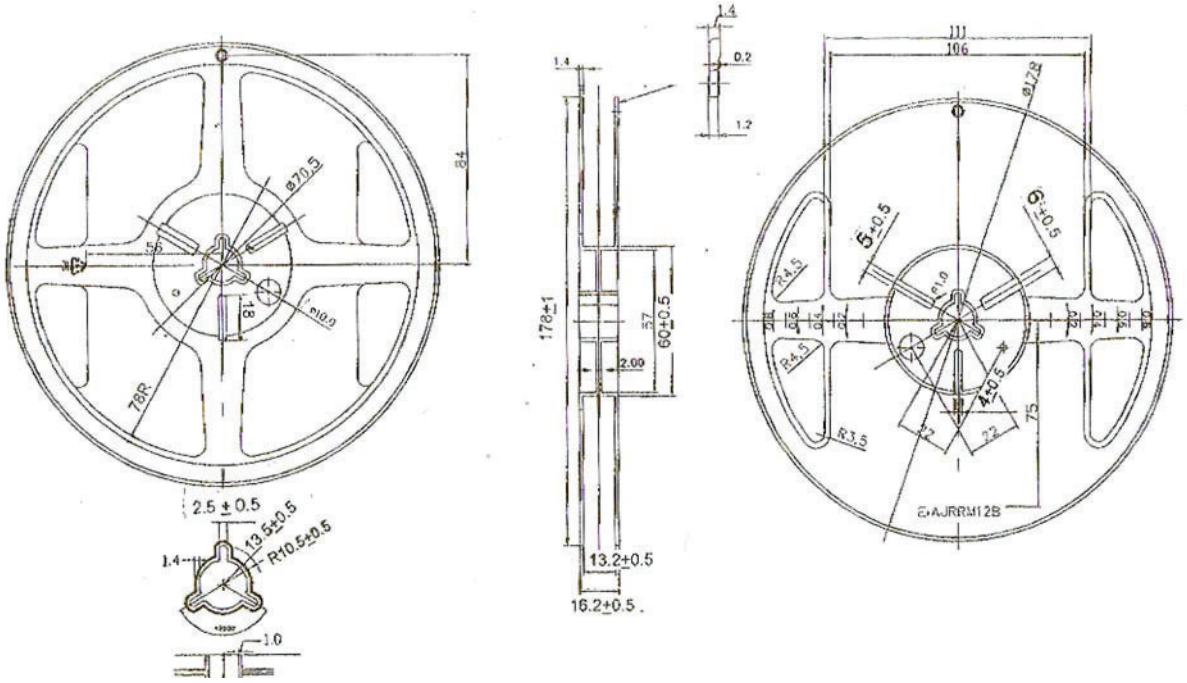

Fig. 14 - Reel Dimensions

For technical questions, contact: consumersensors@vishay.com
THIS DOCUMENT IS SUBJECT TO CHANGE WITHOUT NOTICE. THE PRODUCTS DESCRIBED HEREIN AND THIS DOCUMENT ARE SUBJECT TO SPECIFIC DISCLAIMERS, SET FORTH AT www.vishay.com/doc?91000

Disclaimer

ALL PRODUCT, PRODUCT SPECIFICATIONS AND DATA ARE SUBJECT TO CHANGE WITHOUT NOTICE TO IMPROVE RELIABILITY, FUNCTION OR DESIGN OR OTHERWISE.

Vishay Intertechnology, Inc., its affiliates, agents, and employees, and all persons acting on its or their behalf (collectively, “Vishay”), disclaim any and all liability for any errors, inaccuracies or incompleteness contained in any datasheet or in any other disclosure relating to any product.

Vishay makes no warranty, representation or guarantee regarding the suitability of the products for any particular purpose or the continuing production of any product. To the maximum extent permitted by applicable law, Vishay disclaims (i) any and all liability arising out of the application or use of any product, (ii) any and all liability, including without limitation special, consequential or incidental damages, and (iii) any and all implied warranties, including warranties of fitness for particular purpose, non-infringement and merchantability.

Statements regarding the suitability of products for certain types of applications are based on Vishay's knowledge of typical requirements that are often placed on Vishay products in generic applications. Such statements are not binding statements about the suitability of products for a particular application. It is the customer's responsibility to validate that a particular product with the properties described in the product specification is suitable for use in a particular application. Parameters provided in datasheets and / or specifications may vary in different applications and performance may vary over time. All operating parameters, including typical parameters, must be validated for each customer application by the customer's technical experts. Product specifications do not expand or otherwise modify Vishay's terms and conditions of purchase, including but not limited to the warranty expressed therein.

Hyperlinks included in this datasheet may direct users to third-party websites. These links are provided as a convenience and for informational purposes only. Inclusion of these hyperlinks does not constitute an endorsement or an approval by Vishay of any of the products, services or opinions of the corporation, organization or individual associated with the third-party website. Vishay disclaims any and all liability and bears no responsibility for the accuracy, legality or content of the third-party website or for that of subsequent links.

Vishay products are not designed for use in life-saving or life-sustaining applications or any application in which the failure of the Vishay product could result in personal injury or death unless specifically qualified in writing by Vishay. Customers using or selling Vishay products not expressly indicated for use in such applications do so at their own risk. Please contact authorized Vishay personnel to obtain written terms and conditions regarding products designed for such applications.

No license, express or implied, by estoppel or otherwise, to any intellectual property rights is granted by this document or by any conduct of Vishay. Product names and markings noted herein may be trademarks of their respective owners.

© 2026 VISHAY INTERTECHNOLOGY, INC. ALL RIGHTS RESERVED

THIS DOCUMENT IS SUBJECT TO CHANGE WITHOUT NOTICE. THE PRODUCTS DESCRIBED HEREIN AND THIS DOCUMENT ARE SUBJECT TO SPECIFIC DISCLAIMERS, SET FORTH AT www.vishay.com/doc?91000