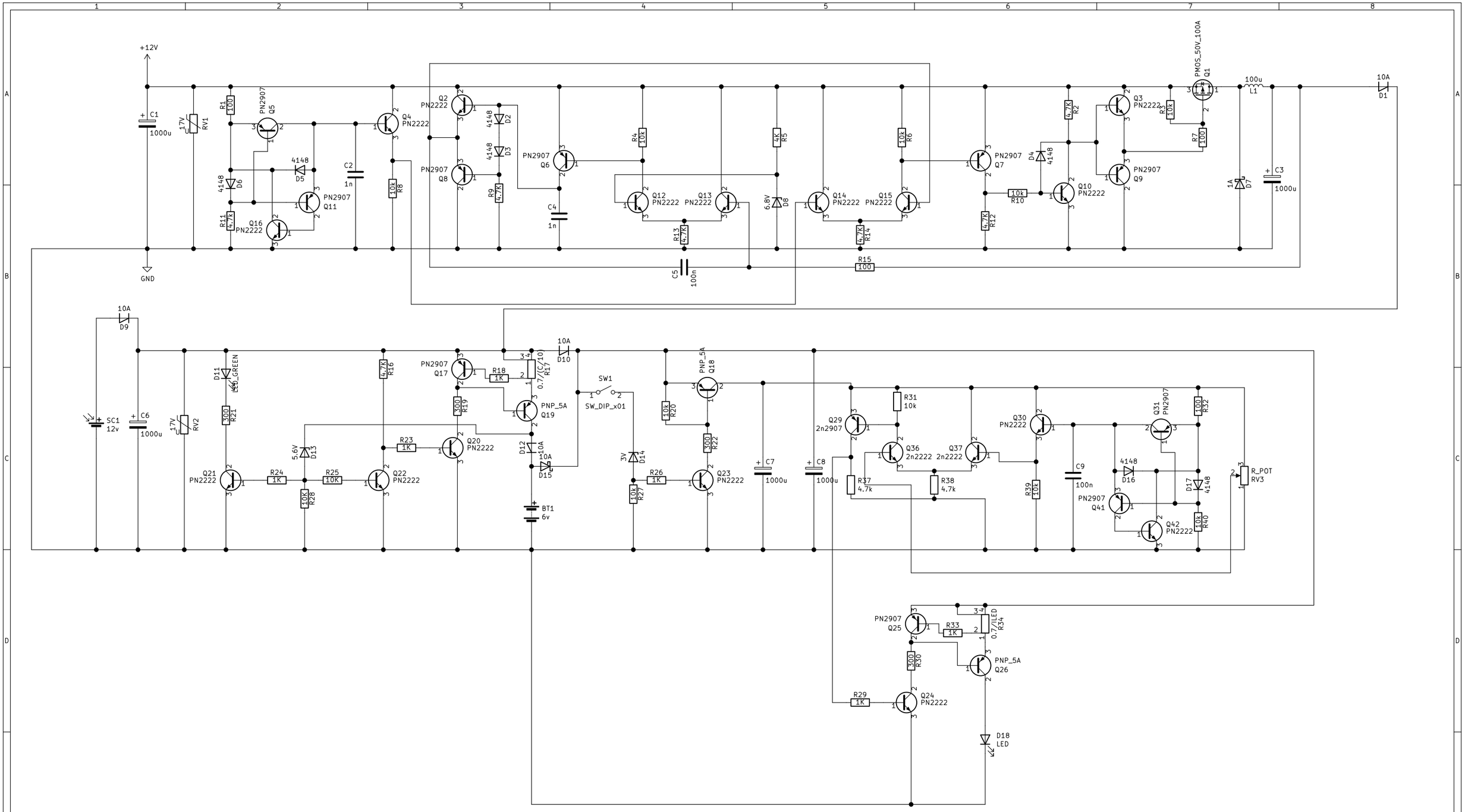

PWM
Sawtooth http://www.vk2zay.net/
AnnopNod

Sheet: /
File: SolarLED.sch

Title: SolarLED

Size: A3	Date: 2020-08-27	**Rev: 1**
KiCad E.D.A. kicad (5.1.6)-1		Id: 1/1