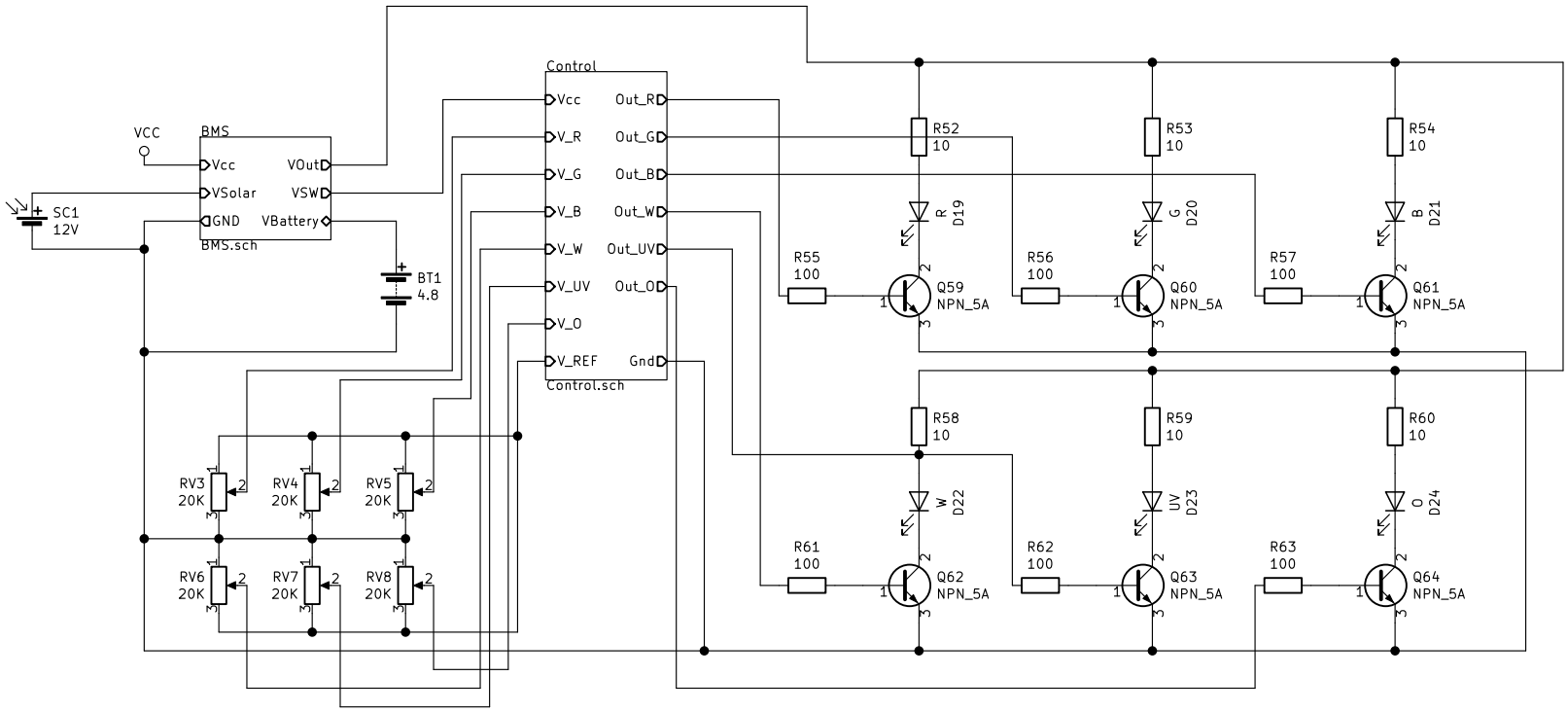

AnnopNod

Sheet: /

File: main.sch

Title: 6 LED Circuit

Size: A4	Date: 2020-05-14	**Rev: 1**
KiCad E.D.A. kicad 5.0.2+dfsg1-1		Id: 1/3

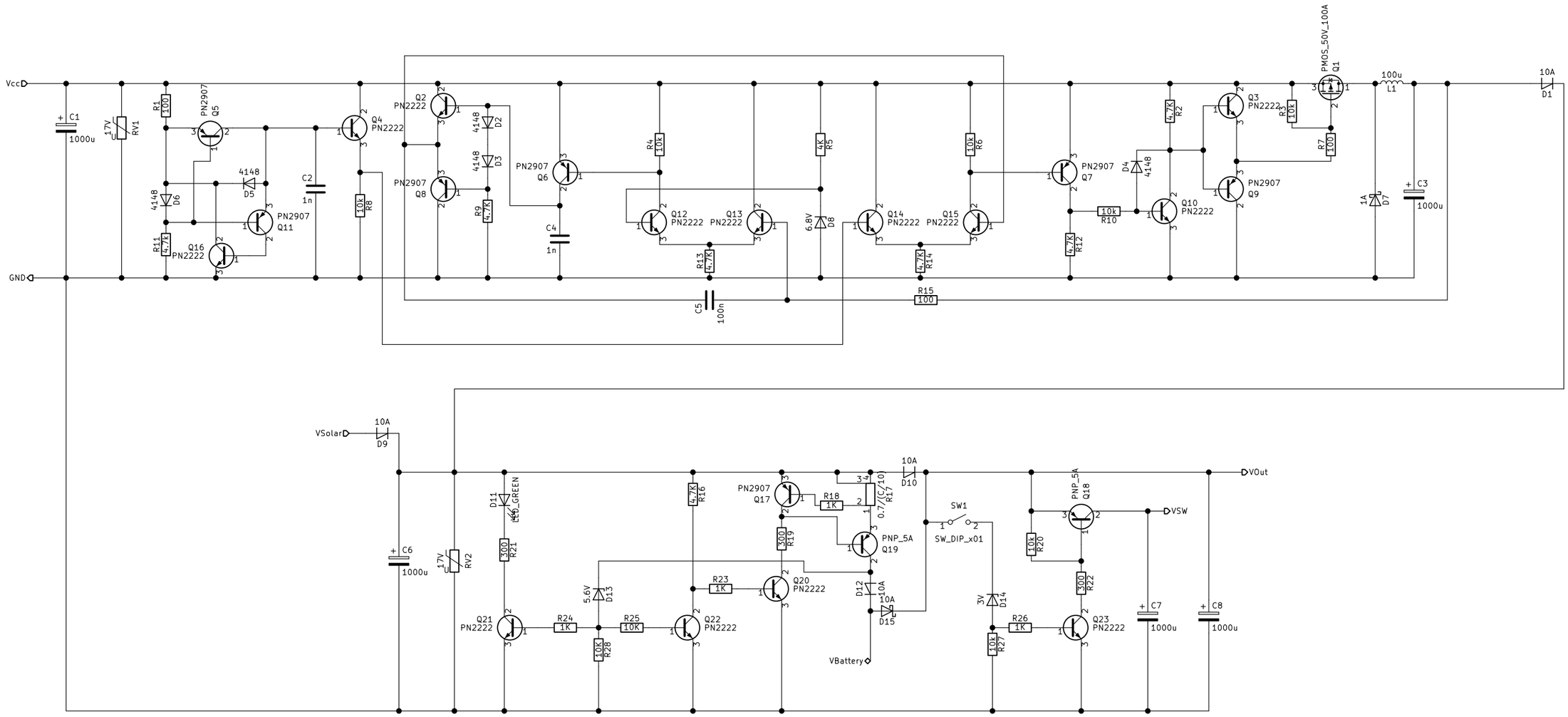

cutoff error amp f/5
battery management system for led
AnnopNod

Sheet: /BMS/
File: BMS.sch

Title: BMS

Size: A3	Date: 2020-05-14	**Rev: 1**
KiCad E.D.A. kicad 5.0.2+dfsg1-1		Id: 2/3

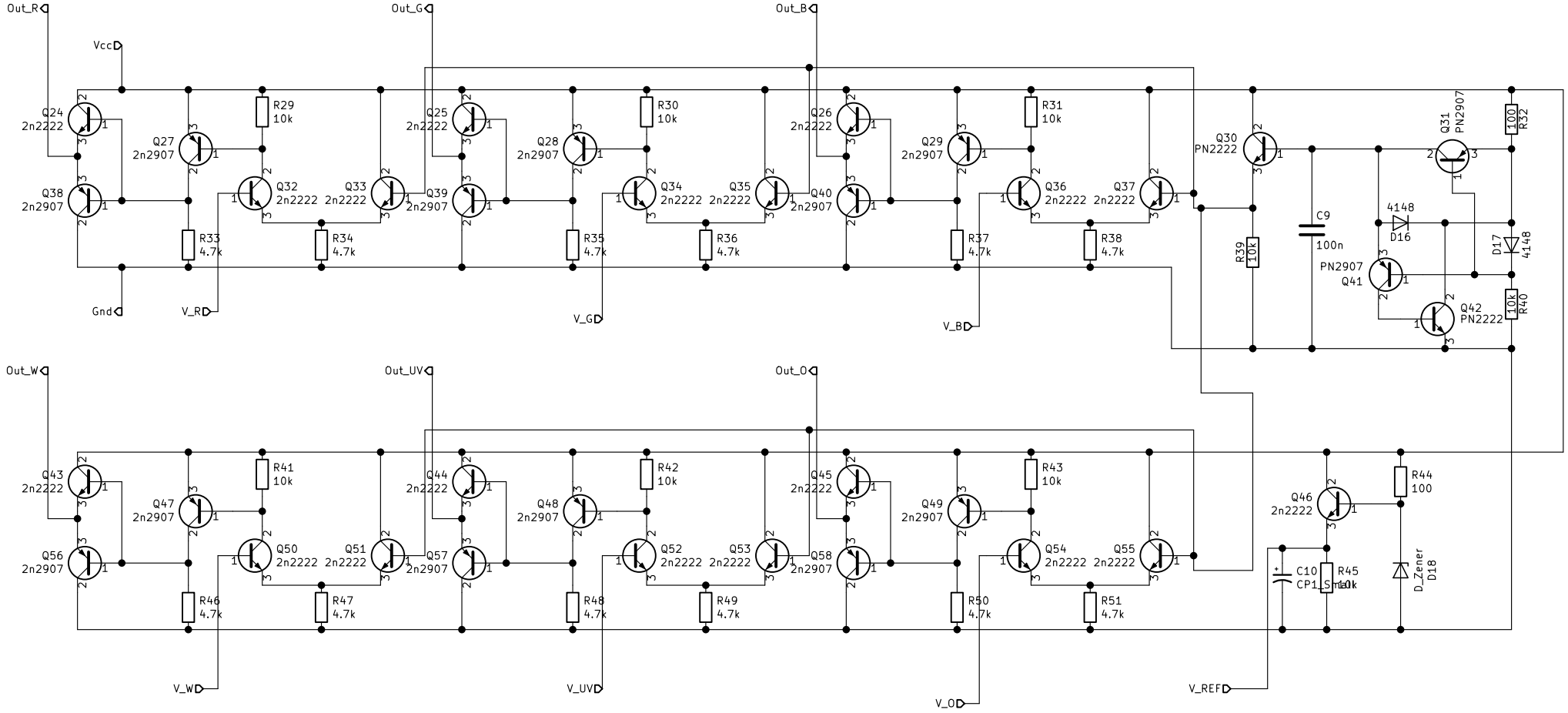

Sawtooth:vk2zay.net
control circuit
AnnopNod

Sheet: /Control/
File: Control.sch

Title: 6 LED control circuit

Size: A4	Date: 2020-05-14	**Rev: 1**
KiCad E.D.A. kicad 5.0.2+dfsg1-1		Id: 3/3