THE UNIVERSITY OF AUCKLAND

SECOND SEMESTER, 2019
Campus: City

COMPUTER SCIENCE

Computer Systems 1

(Time Allowed: TWO HOURS)

Note:

- The use of calculators is NOT permitted.
- Compare the exam version number on the Teleform sheet supplied with the version number above. If they do not match, ask the exam supervisor for a new sheet.
- Enter your name and student ID on the Teleform sheet. Your name should be entered left aligned. If your name is longer than the number of boxes provided, truncate it.
- Answer ALL **Multiple-choice** questions on the Teleform answer sheet provided.
- Use a dark pencil to mark your answers in the multiple choice answer boxes on the Teleform sheet. Check that the question number on the sheet corresponds to the question number in this question/answer book. If you spoil your sheet, ask the supervisor for a replacement.
- An appendix is included on the last page. You may detach this appendix.
- This exam is marked out of 100 marks and counts for 50% of your final grade.
- Each question has exactly 1 (one) correct answer. If you believe that a question has either NO or MULTIPLE correct answers, select the ONE you believe is most likely to be the intended answer.
- Some questions have 4 answer options and some have 5.

MULTIPLE CHOICE QUESTIONS

For each question, choose the **best** answer according to the information presented in lectures. Select your preferred answer on the Teleform answer sheet provided by shading in the appropriate box.

Question 1
[1.5 marks] What is the decimal value of IEEE 754 floating point format "0xBE800000"?

(a) 0.5_{10}
(b) -1.5_{10}
(c) -0.5_{10}
(d) -0.25_{10}
(e) -127.5_{10}

Question 2
[1.5 marks] Convert $A.8_{16}$ to a decimal value.

(a) 10.5_{10}
(b) 10.100_{10}
(c) 10.8_{10}
(d) 12.5_{10}
(e) 8.10_{10}

Question 3
[1.5 marks] According to the LC3 data-path (see appendix), which component is used to select either the result of ALU or sign-extended immediate as the source value for MAR (Memory Address Register)?

(a) Register File (Registers)
(b) PCMUX
(c) Finite State Machine (Control)
(d) MARMUX
(e) ALU

Question 4
[1.5 marks] Which of the following is the advantage of using fixed-point or integer?

(a) Fast
(b) Consistent accuracy
(c) Headroom
(d) Dynamic range
(e) Non-binary

Question 5
[1.5 marks] Which one is the characteristic of register compared to memory?

(a) Read-only
(b) One address can be accessed at a time
(c) Smaller area per data-bit
(d) More expensive per data-bit
(e) Slower

Question 6
[1.5 marks] The memory is byte addressable. What is the minimum number of bits for representing memory address if the size of memory is 1 GB?

(a) 32
(b) 24
(c) 30
(d) 20
(e) 16

Question 7
[1.5 marks] What is the minimum number of bits for representing the opcode if there are 30 different instructions?

(a) 3
(b) 5
(c) 2
(d) 6
(e) 4

Question 8
[1.5 marks] What is the meaning of the directive ".STRINGZ"?

(a) Define the starting address of the program
(b) Allocate a word of storage for the label at the same instruction with an initialized value
(c) Indicate that it is the end of the program
(d) Allocate a number of words of storage for the label at the same instruction
(e) Allocate memory for some characters that end with a null terminator

The LC3 program below is used for the following 3 questions.

```
        .ORIG  x3000
        LD     R2, VALN
        ADD    R4, R2, #0
        ADD    R1, R2, #-1
OLoop   AND    R3, R3, #0
ILoop   ADD    R3, R3, R4
        ADD    R1, R1, #-1
        BRp    ILoop
        ADD    R4, R3, #0
        ADD    R2, R2, #-1
        ADD    R1, R2, #-1
        BRp    OLoop
        HALT
VALX    .BLKW  x12
VALN    .BLKW  1
        .END
```

Question 9
[2 marks] What is the machine code of "`BRp ILoop`"?

(a) `0x03FC`
(b) `0x02FD`
(c) `0x03FD`
(d) `0x03FE`
(e) `0x02FE`

Question 10
[2 marks] What is the address of label "VALN"?

(a) `0x301A`
(b) `0x3014`
(c) `0x301D`
(d) `0x301E`
(e) `0x3030`

Question 11
[2.5 marks] What is the value of R4 when the program terminates if the value stored at address "VALN" is 5?

(a) `0x0120`
(b) `0x0064`
(c) `0x0078`
(d) `0x00C0`
(e) `0x0024`

The LC3 program below is used for the following 3 questions.

```
        .ORIG  x3000
        LD     R1, S_char
        GETC
        NOT    R1, R1
        ADD    R0, R0, R1
        ADD    R0, R0, #1
        LD     R1, B_char
        ADD    R0, R0, R1
        OUT
        HALT
S_char .stringz "a"
B_char .stringz "A"
        .END
```

Question 12
[2 marks] What is the machine code of "`LD R1, S_char`"?

(a) `0x2208`
(b) `0x2207`
(c) `0x2209`
(d) `0x2409`
(e) `0x2408`

Question 13
[2 marks] What is the address of label "B_char"?

(a) `0x3010`
(b) `0x3011`
(c) `0x3009`
(d) `0x300A`
(e) `0x300B`

Question 14
[2.5 marks] What is displayed on the console if 'd' is inputted from the keyboard during the execution of the program?

(a) `D`
(b) `13`
(c) `3`
(d) `d`
(e) `E`

The LC3 program below is used for the following 2 questions.

```
        .ORIG  x3000
        LD     R6, EMPTY
        AND    R0, R0, #0
        ADD    R0, R0, #2
        ADD    R1, R0, #2
        ADD    R2, R1, #2
        ADD    R3, R2, #2
        JSR    Push
        ADD    R0, R1, #0
        JSR    Push
        ADD    R0, R2, #0
        JSR    Push
        ADD    R0, R3, #0
        JSR    Push
        JSR    Pop
        JSR    Pop
        JSR    Pop
        ADD    R4, R0, #0
        LDI    R5, EMPTY
        BRnzp  EXIT
Push    STR    R0, R6, #0          ; Stack Push
        ADD    R6, R6, #-1
        RET
Pop     ADD    R6, R6, #1          ; Stack Pop
        LDR    R0, R6, #0
        RET
EXIT    HALT                       ; Halt machine
EMPTY   .FILL  x4000
        .END
```

Question 15
[2.5 marks] What is the value of R4 right after the completion of the program?

(a) `0x0004`
(b) `0x0002`
(c) `0x0000`
(d) `0x0008`
(e) `0x0006`

Question 16
[2.5 marks] What is the value of R5 right after the completion of the program?

(a) `0x0008`
(b) `0x0004`
(c) `0x0002`
(d) `0x0000`
(e) `0x0006`

Read the program below before answering the next four questions.

```
#include <stdio.h>
int main() {
  int a, b;
  int *c, *d, *e;
  a = 0x3000;
  b = 0x4000;
  c = a;
  d = &a;
  e = &b;
  c++;
  (*e)++;
  printf("a = %x\n", a);
  printf("b = %x\n", b);
  printf("c = %x\n", c);
  printf("d = %x\n", d);
  printf("*e = %x\n", *e);
}
```

Question 17
[1.5 marks] Which one of the following statements is correct?

(a) The output of "`printf("a = %x\n", a)`" is: `a = 3002`
(b) The output of "`printf("b = %x\n", b)`" is: `b = 4000`
(c) The output of "`printf("b = %x\n", b)`" is: `b = 4001`
(d) None of the other answers is correct
(e) The output of "`printf("a = %x\n", a)`" is: `a = 3001`

Question 18
[1.5 marks] Which one of the following statements is correct?

(a) The output of "`printf("c = %x\n", c)`" is the contents of the memory at address `0x3001`
(b) The output of "`printf("c = %x\n", c)`" is the value of variable `a`
(c) The output of "`printf("c = %x\n", c)`" is the contents of the memory at address `0x3000`
(d) The output of "`printf("c = %x\n", c)`" is the value of variable `b`
(e) None of the other answers is correct.

Question 19
[1.5 marks] Which one of the following statements is correct?

(a) The output of "`printf("d = %x\n", d)`" is: `d = 3001`
(b) The output of "`printf("d = %x\n", d)`" is: `d = 3000`
(c) The output of "`printf("d = %x\n", d)`" is the address of variable `a`
(d) The output of "`printf("d = %x\n", d)`" is the contents of the memory at address `0x3000`
(e) None of the other answers is correct.

Question 20
[1.5 marks] Which one of the following statements is correct?

(a) The output of "`printf("*e = %x\n", *e)`" is the memory address of variable `b`
(b) The output of "`printf("*e = %x\n", *e)`" is the contents of the memory at address `0x4000`
(c) The output of "`printf("*e = %x\n", *e)`" is the contents of the memory at address `0x4001`
(d) The output of "`printf("*e = %x\n", *e)`" is: `*e = 4001`
(e) The output of "`printf("*e = %x\n", *e)`" is: `*e = 4000`

Read the program below before answering the next two questions.

```
#include <stdio.h>
void foo(int s, int t, int *x, int *y);
int main() {
  int a = 1, b = 2, c = 3, d = 4;
  foo(a, b, &c, &d);
  printf("a=%d b=%d\n", a, b);
  printf("c=%d d=%d\n", c, d);
}

void foo(int s, int t, int *x, int *y) {
  s = t;
  t++;
  *x = *y;
  (*y)++;
}
```

Question 21
[2 marks] The output of "`printf("a=%d b=%d\n", a, b)`" is:

(a) `a=1 b=3`
(b) `a=2 b=2`
(c) `a=2 b=3`
(d) `a=1 b=2`

Question 22
[2 marks] The output of "`printf("c=%d d=%d\n", c, d)`" is:

(a) `c=4 d=5`
(b) `c=3 d=5`
(c) `c=3 d=4`
(d) `c=4 d=4`

Read the program below before answering the next four questions. A variable of "`unsigned short`" type in C consists of two bytes.

```
#include <stdio.h>
int main() {
  unsigned short a = 0xfdb9;
  unsigned short b = 0xeca8;
  unsigned short c = 0xdb97;
  unsigned short d = 0xca86;
  a = a ^ 0x2468;
  b = b & 0x1357;
  c = c | 0x2348;
  d = ~d;
  printf("a = 0x%04x\n", a);
  printf("b = 0x%04x\n", b);
  printf("c = 0x%04x\n", c);
  printf("d = 0x%04x\n", d);
}
```

Question 23
[1.5 marks] The output of "`printf("a = 0x%04x\n", a)`" is:

(a) `a = 0x2428`
(b) `a = 0xd9d1`
(c) `a = 0xfdf9`
(d) `a = 0x262e`

Question 24
[1.5 marks] The output of "`printf("b = 0x%04x\n", b)`" is:

(a) `b = 0x0000`
(b) `b = 0x1357`
(c) `b = 0xffff`
(d) `b = 0x9fd6`

Question 25
[1.5 marks] The output of "`printf("c = 0x%04x\n", c)`" is:

(a) `c = 0xf8df`
(b) `c = 0x0300`
(c) `c = 0xfbdf`
(d) `c = 0x2468`

Question 26
[1.5 marks] The output of "`printf("d = 0x%04x\n", d)`" is:

(a) `d = 0x3579`
(b) `d = 0x0000`
(c) `d = 0x95f2`
(d) `d = 0xee96`

Read the program below before answering the next three questions.

```
#include <stdio.h>
int main(int argc, char *argv[]) {
  printf("argc = %d\n", argc);
  printf("[1] = %c\n", *(argv[1]+2));
}
```

Assume that the name of the binary executable file of the program is `com` and the program is executed with the command below:

```
./com Last exam
```

Question 27

[1 mark] The output of "`printf("argc = %d\n", argc)`" is:

(a) `argc = 2`
(b) `argc = 15`
(c) `argc = 3`
(d) `argc = 9`

Question 28

[1.5 marks] The output of "`printf("[1] = %c\n", *(argv[1]+2))`" is:

(a) `[1] = s`
(b) `[1] = a`
(c) `[1] = c`
(d) `[1] = x`

Question 29

[1.5 marks] Which one of the following statements is correct?

(a) `argv[1]` is the address of "`exam`".
(b) `argv[1]` stores the address of character "`L`".
(c) The value stored in `argv[1]` is "`exam`".
(d) The value stored in `argv[1]` is "`./com`".
(e) The value stored in `argv[1]` is "`Last`".

Read the program and the descriptions below before answering the next six questions.

```
#include <stdio.h>
int s=-9, t=-8, u=-7, v=-6, w=-5;
int main() {
  int a=1, b=2, c=3, d=4, e=5;
  while (s <= -3) {
    s = s + b;
    e = v - c;
  }
  printf("s = %d  e = %d\n", s, e);
}
```

Assume that (i) `rG` represents the register pointing to the beginning of the locations where the global variables are stored, (ii) `rL` denotes the register that records the start of the locations where the local variables are stored, and (iii) the offsets of the variables in the program above are given in the table below. In the table, each capital letter represents an integer.

variable	offset
a	A
b	B
c	C
d	D
e	E
s	S
t	T
u	U
v	V
w	W

Question 30
[1.5 marks] What is the offset value B?

(a) 1
(b) 3
(c) -3
(d) 2
(e) -1

Question 31
[1.5 marks] What is the offset value V?

(a) -6
(b) 3
(c) 1
(d) -3
(e) 2

Question 32
[1 mark] In LC-3, which register points to the beginning of the locations where the local variables are stored?

(a) Register 6
(b) Register 4
(c) Register 5
(d) PC
(e) Register 7

Question 33

[2 marks] Which one of the following LC-3 instruction sequences will be generated when converting condition "`(s <= -3)`" of the "`while`" statement to LC-3 assembly language instructions? Label "`PRINT`" should be regarded as the label of the `printf` statement.

(a)
```
LDR   R0, rG, #S
ADD   R1, R0, #-3
BRnz  PRINT
```

(b)
```
LDR   R0, rG, #S
ADD   R1, R0, #3
BRp   PRINT
```

(c)
```
LDR   R0, rG, #S
ADD   R1, R0, #3
BRnz  PRINT
```

(d)
```
LDR   R0, rG, #S
ADD   R1, R0, #-3
BRp   PRINT
```

(e)
```
LDR   R0, rL, #S
ADD   R1, R0, #-3
BRp   PRINT
```

Question 34

[1.5 marks] Assume that the value of variable `s` is in register 0 and the value of variable `b` is in register 1. Which one of the following LC-3 instruction sequences will be generated when converting statement "`s = s + b`" to LC-3 assembly language instructions?

(a)
```
ADD   R2, R0, R1
STR   R2, rL, #-S
```

(b)
```
ADD   R0, R0, R1
STR   R0, rL, #S
```

(c)
```
ADD   R2, R0, R1
STR   R0, rG, #S
```

(d)
```
ADD   R2, R0, R1
STR   R0, rL, #S
```

(e)
```
ADD   R0, R0, R1
STR   R0, rG, #S
```

Question 35

[2 marks] Assume that the value of variable `v` is in register 0 and the value of variable `c` is in register 1. Which one of the following LC-3 instruction sequences will be generated when converting statement "`e = v - c`" to LC-3 assembly language instructions? Label "`WHILE`" should be regarded as the label of the `while` statement.

(a)
```
NOT   R0, R0
ADD   R0, R0, #1
ADD   R2, R0, R1
STR   R2, rG, #E
BRnzp WHILE
```

(b)
```
NOT   R1, R1
ADD   R1, R1, #1
ADD   R2, R0, R1
STR   R2, rG, #E
BRnzp WHILE
```

(c)
```
NOT   R0, R0
ADD   R2, R0, R1
STR   R2, rL, #E
BRnzp WHILE
```

(d)
```
NOT   R1, R1
ADD   R1, R1, #1
ADD   R2, R0, R1
STR   R2, rL, #E
BRnzp WHILE
```

(e)
```
NOT   R1, R1
ADD   R2, R0, R1
STR   R2, rL, #E
BRnzp WHILE
```

Read the program and the descriptions below before answering the next six questions.

```
int foo(int* s, int* t, int u, int v);
int main() {
  int *a, *b;
  int c, d;
  a = &c;
  b = &d;
  c = 1;
  d = 2;
  d = foo(a, b, c, d);
}
int foo(int* s, int* t, int u, int v){
  int x;
  int *y, *z;
  x = u + *t;
  y = &x;
  z = &u;
  return x;
}
```

The diagram below shows the memory of the machine executing the above program. The address of each memory location is shown next to each location.

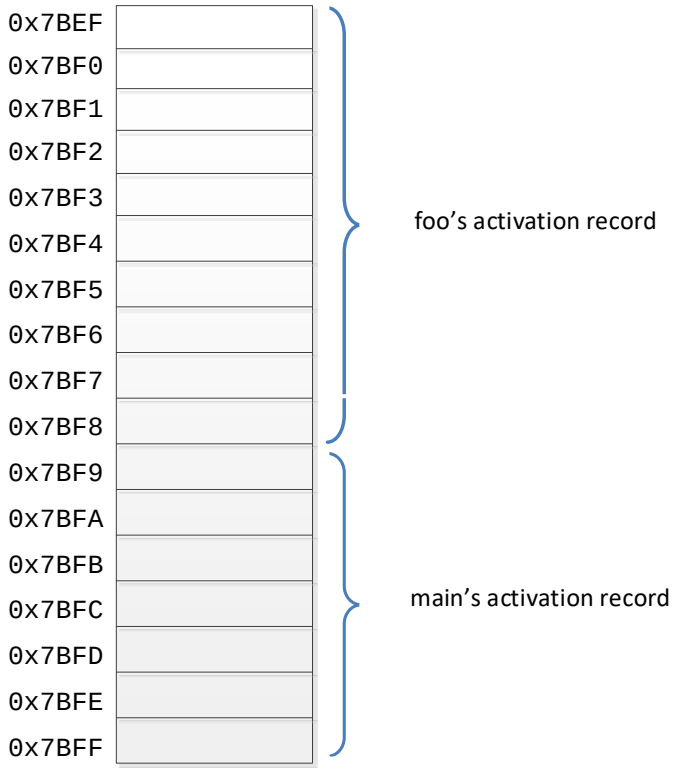

Question 36
[1.5 marks] The compiler creates a symbol table while compiling the program. In the symbol table, the location of each argument of function `foo` is recorded as an offset. What is the offset of argument "u" of function `foo`?

(a) 6
(b) 1
(c) -1
(d) -6
(e) 5

Question 37
[2 marks] Which one of the following statements is correct?

(a) The execution of statement "`a = &c`" in function `main` sets the value at location `0x7BF9` to `0x7BFB`.
(b) The execution of statement "`a = &c`" in function `main` sets the value at location `0x7BFF` to `0x7BFB`.
(c) The execution of statement "`a = &c`" in function `main` sets the value at location `0x7BFC` to `0x7BFE`.
(d) The execution of statement "`a = &c`" in function `main` sets the value at location `0x7BFC` to `0x7BFA`.
(e) The execution of statement "`a = &c`" in function `main` sets the value at location `0x7BFF` to `0x7BFD`.

Question 38
[2 marks] Which one of the following statements is correct?

(a) During the execution of statement "`b = &d`" in function `main`, the value in register 6 is `0x7BF9`.
(b) During the execution of statement "`b = &d`" in function `main`, the value in register 6 is `0x7BF8`.
(c) During the execution of statement "`b = &d`" in function `main`, the value in register 5 is `0x7BFF`.
(d) During the execution of statement "`b = &d`" in function `main`, the value in register 6 is `0x7BEF`.
(e) During the execution of statement "`b = &d`" in function `main`, the value in register 5 is `0x7BF8`.

Question 39
[2 marks] Which one of the following statements is correct?

(a) During the execution of statement "`x = u + *t`" in function `foo`, the value at location `0x7BF8` is set to `3`.
(b) During the execution of statement "`x = u + *t`" in function `foo`, the value at location `0x7BEF` is set to `0x7BF5`.
(c) During the execution of statement "`x = u + *t`" in function `foo`, the value at location `0x7BF1` is set to `0x7BF7`.
(d) During the execution of statement "`x = u + *t`" in function `foo`, the value at location `0x7BEF` is set to `3`.
(e) During the execution of statement "`x = u + *t`" in function `foo`, the value at location `0x7BF1` is set to `3`.

Question 40
[2 marks] Which one of the following statements is correct?

(a) When statement "`return x`" in function `foo` is executed, the value at location `0x7BF3` is modified.
(b) During the execution of statement "`y = &x`" in function `foo`, the value in register 4 is `0x7BF1.`
(c) When statement "`return x`" in function `foo` is executed, the value in register 4 is modified.
(d) During the execution of statement "`y = &x`" in function `foo`, the value at location `0x7BF2` is `0x7BFC`.
(e) During the execution of statement "`z = &u`" in function `foo`, the value at location `0x7BF6` is modified.

Question 41
[2 marks] Which one of the following statements is correct?

(a) When function `main` is converted to LC-3 assembly language instructions, the assembly instructions contain code for changing the stack frame pointer of function `main`.
(b) When function `foo` is converted to LC-3 assembly language instructions, the assembly instructions contain code for removing the complete activation record of function `foo` from the run-time stack.
(c) When function `foo` is converted to LC-3 assembly language instructions, the assembly instructions contain code for copying the return value to variable `d` of function `main`.
(d) When function `main` is converted to LC-3 assembly language instructions, the assembly instructions contain code for storing the value of register 7 in the activation record of function `foo`.
(e) When function `foo` is converted to LC-3 assembly language instructions, the assembly instructions contain code for storing the value of register 7 in the activation record of function `foo`.

Read the program and the descriptions below before answering the next four questions.

```
int main() {
  int s;
  int *t;
  int w[9]={1,2,3,4,5,6,7,8,9};
  s = w[2];
  t = w + 3;
  s = *t;
}
```

Assume that (i) `rX` represents the register pointing to the beginning of the locations where the variables are stored, and (ii) the offsets of the variables in the program above are given in the table below. In the table, each capital letter represents an integer.

variable	offset
s	S
t	T
w	W

Question 42

[1.5 marks] What is the offset value `W`?

(a) -9
(b) -2
(c) 9
(d) -10
(e) 2

Question 43

[2 marks] Which one of the following LC-3 instruction sequences will be generated when converting statement "`s = w[2]`" to LC-3 assembly language instructions?

(a)
```
LDR   R0, rX, #W
ADD   R1, R0, #2
STR   R1, rX, #S
```

(b)
```
LDR   R0, rX, #W
LDR   R1, R0, #2
STR   R1, rX, #S
```

(c)
```
LDR   R0, rX, #2
LDR   R1, R0, #W
STR   R1, rX, #S
```

(d)
```
ADD   R0, rX, #W
ADD   R1, R0, #2
STR   R1, rX, #S
```

(e)
```
ADD   R0, rX, #W
LDR   R1, R0, #2
STR   R1, rX, #S
```

Question 44
[2 marks] Which one of the following LC-3 instruction sequences will be generated when converting statement "`t = w + 3`" to LC-3 assembly language instructions?

(a)
```
ADD   R0, rX, #W
ADD   R0, R0, #3
STR   R0, rX, #T
```

(b)
```
ADD   R0, rX, #W
ADD   R0, R0, #3
LDR   R0, R0, #0
STR   R0, rX, #T
```

(c)
```
LDR   R0, rX, #W
ADD   R0, R0, #3
STR   R0, rX, #T
```

(d)
```
ADD   R0, rX, #W
LDR   R0, R0, #3
STR   R0, rX, #T
```

(e)
```
AND   R0, R0, #0
ADD   R0, R0, #W
ADD   R0, R0, #3
STR   R0, rX, #T
```

Question 45
[2 marks] Which one of the following LC-3 instruction sequences will be generated when converting statement "`s = *t`" to LC-3 assembly language instructions?

(a)
```
LDR   R0, rX, #0
ADD   R1, R0, #T
STR   R1, rX, #S
```

(b)
```
LDR   R0, rX, #T
STR   R0, rX, #S
```

(c)
```
ADD   R0, rX, #T
LDR   R1, R0, #0
STR   R1, rX, #S
```

(d)
```
LDR   R0, rX, #0
LDR   R1, R0, #T
STR   R1, rX, #S
```

(e)
```
LDR   R0, rX, #T
LDR   R1, R0, #0
STR   R1, rX, #S
```

Question 46
[1 mark] Which one of the following statements is correct?

(a) The pre-processor of a compiler generates a symbol table.
(b) The pre-processor of a compiler carries out syntax analysis.
(c) The pre-processor of a compiler carries out macro substitution.
(d) The pre-processor of a compiler optimises a program to make it run more efficiently.

Question 47
[1 mark] Which one of the following statements is correct?

(a) While converting a program to machine code, the interpreter carries out program optimization over multiple statements of the program.
(b) Each operation in C corresponds to an instruction in the instruction set of a CPU.
(c) As the instructions of assembly languages are implemented by the hardware of CPUs, programs written in assembly languages can run on different types of CPUs without any modification.
(d) An interpreter converts a program written in high-level programming language to machine code and executes the code on behalf of the user.

Question 48
[1 mark] Which one of the following statements is correct?

(a) Due to the spatial locality exhibited by most programs, data are transferred in blocks between different layers of the memory hierarchy.
(b) Due to the spatial locality exhibited by most programs, programmers should avoid using global variables to make the programs run more efficiently.
(c) Spatial locality means local variables in programs are accessed more frequently than global variables.
(d) Spatial locality means variables that are stored together are likely to be accessed frequently.

Question 49
[1 mark] Which one of the following statements is correct?

(a) Compulsory miss can be avoided by increasing the associativity of the cache.
(b) Cache thrashing happens when all the slots in the cache are occupied.
(c) In a fully associative cache, a data item is always stored in the same cache line.
(d) Compared with a fully associative cache of the same size, the access speed of a 2-way set associative cache is faster.

Read the descriptions below before answering the next two questions.
A direct mapped cache has 32 cache lines. Each cache line consists of 16 words, and each word is eight bytes. The address bus consists of 22 bits.

Question 50
[1.5 marks] The total number of bytes for storing data in the cache is

(a) 2^{12}
(b) 2^{7}
(c) 2^{10}
(d) 2^{22}
(e) 2^{5}

Question 51
[1.5 marks] Which one of the following statements is correct?

(a) The tag field of the memory address consists of 22 bits.
(b) The index field of the memory address consists of 6 bits.
(c) The offset field of the memory address consists of 7 bits.
(d) The offset field of the memory address consists of 4 bits.
(e) The tag field of the memory address consists of 17 bits.

Read the descriptions below before answering the next four questions.
For a direct mapped cache, the address bus consists of 16 bits. The offset field, the index field and the tag field consist of 8, 4 and 4 bits respectively. Assume the cache is empty to start with. Work out if the following accesses to the given addresses are hits or misses. Each access is numbered with a sequence ID. All addresses are hexadecimal numbers.

Sequence ID	1	2	3	4	5	6	7	8
Address	1234	12EF	1334	14EF	2234	139A	2200	1234

Question 52
[1.5 marks] Accesses 1 and 2 are respectively

(a) Miss, Hit
(b) Hit, Miss
(c) Hit, Hit
(d) Miss, Miss

Question 53
[1.5 marks] Accesses 3 and 4 are respectively

(a) Hit, Hit
(b) Miss, Hit
(c) Hit, Miss
(d) Miss, Miss

Question 54
[1.5 marks] Accesses 5 and 6 are respectively

(a) Hit, Hit
(b) Hit, Miss
(c) Miss, Hit
(d) Miss, Miss

Question 55
[1.5 marks] Accesses 7 and 8 are respectively

(a) Hit, Miss
(b) Miss, Hit
(c) Miss, Miss
(d) Hit, Hit

Question 56
[1 mark] Which one of the following statements is correct?

(a) The page table is shared by all the processes on a computer system.
(b) Virtual addresses are mapped to physical addresses when compilers convert programs to machine code.
(c) All the virtual pages of a program must be loaded into the memory before the program starts its execution.
(d) The size of a virtual memory can be much larger than the physical memory of a computer system.

Question 57
[1 mark] Which one of the following statements is correct?

(a) A null entry in the page table means the corresponding physical page has not been allocated to any virtual page.
(b) The dirty bit in a page table entry indicates whether the corresponding page has been swapped out.
(c) Not all page faults are caused by accessing invalid addresses.
(d) Virtual memory uses the write-through policy for handling update operations.

Read the descriptions below before answering the next three questions.
Assume that the virtual address of a virtual memory consists of 36 bits, the address of the physical memory consists of 32 bits, and the size of each virtual page is 2KB. The first eight entries of the page table are as below.

7	0xCDEE
6	0xABC1
5	0x321E
4	0x6542
3	0x9875
2	0xBAB3
1	0xDCD7
0	0xDEF6

Question 58
[1.5 marks] In the virtual address, how many number of bits are used to represent the virtual page number?

(a) 24
(b) 32
(c) 36
(d) 11
(e) 25

Question 59
[2.5 marks] What is the virtual page number in virtual address `0x003AB2B9A`.

(a) `0x5754`
(b) `0x3AB2B9`
(c) `0x3AB2`
(d) `0x7565`
(e) `0x1`

Question 60
[2.5 marks] What is the physical address that corresponds to virtual address `0x0000038DC`?

(a) `0x0ABC18DC`
(b) `0x066F70DC`
(c) `0x04CB3BEC`
(d) `0x098758DC`
(e) `0x056601DC`

Appendix

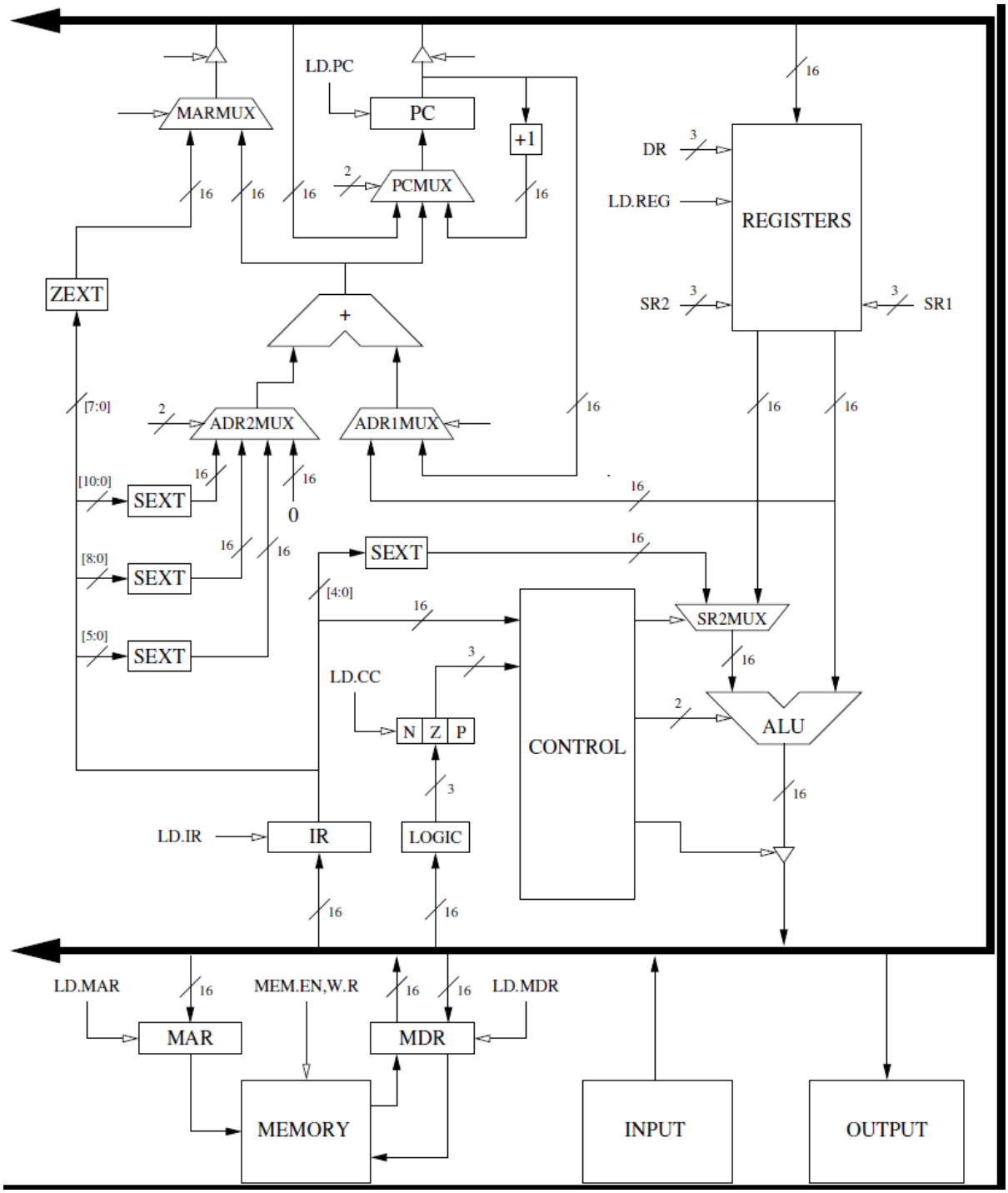
LD.PC
MARMUX
PC
+1
PCMUX
DR
LD.REG
REGISTERS
SR2
SR1
ZEXT
+
ADR2MUX
ADR1MUX
[7:0]
[10:0]
SEXT
[8:0]
SEXT
[5:0]
SEXT
0
SEXT
[4:0]
SR2MUX
LD.CC
N Z P
CONTROL
ALU
LD.IR
IR
LOGIC
LD.MAR
MAR
MEM.EN,W.R
MDR
LD.MDR
MEMORY
INPUT
OUTPUT

Appendix

	15 14 13 12	11 10 9	8 7 6	5	4 3	2 1 0
ADD+	0001	DR	SR1	0	00	SR2
ADD+	0001	DR	SR1	1	imm5	
AND+	0101	DR	SR1	0	00	SR2
AND+	0101	DR	SR1	1	imm5	
BR	0000	n z p	PCoffset9			
JMP	1100	000	BaseR	000000		
JSR	0100	1	PCoffset11			
JSRR	0100	0 00	BaseR	000000		
LD+	0010	DR	PCoffset9			
LDI+	1010	DR	PCoffset9			
LDR+	0110	DR	BaseR	offset6		
LEA+	1110	DR	PCoffset9			
NOT+	1001	DR	SR	111111		
RET	1100	000	111	000000		
RTI	1000	000000000000				
ST	0011	SR	PCoffset9			
STI	1011	SR	PCoffset9			
STR	0111	SR	BaseR	offset6		
TRAP	1111	0000	trapvect8			
reserved	1101					

Format of the entire LC-3 instruction set. Note: + indicates instructions that modify condition codes

IEEE 754 FLOATING-POINT STANDARD

$$(-1)^S \times (1 + \text{Fraction}) \times 2^{(\text{Exponent} - \text{Bias})}$$

where Single Precision Bias = 127

S	Exponent	Fraction
31	30 23	22 0

Appendix

DEC	BIN	HEX	DEC	BIN	HEX
0	00000000	00	64	01000000	40
1	00000001	01	65	01000001	41
2	00000010	02	66	01000010	42
3	00000011	03	67	01000011	43
4	00000100	04	68	01000100	44
5	00000101	05	69	01000101	45
6	00000110	06	70	01000110	46
7	00000111	07	71	01000111	47
8	00001000	08	72	01001000	48
9	00001001	09	73	01001001	49
10	00001010	0A	74	01001010	4A
11	00001011	0B	75	01001011	4B
12	00001100	0C	76	01001100	4C
13	00001101	0D	77	01001101	4D
14	00001110	0E	78	01001110	4E
15	00001111	0F	79	01001111	4F
16	00010000	10	80	01010000	50
17	00010001	11	81	01010001	51
18	00010010	12	82	01010010	52
19	00010011	13	83	01010011	53
20	00010100	14	84	01010100	54
21	00010101	15	85	01010101	55
22	00010110	16	86	01010110	56
23	00010111	17	87	01010111	57
24	00011000	18	88	01011000	58
25	00011001	19	89	01011001	59
26	00011010	1A	90	01011010	5A
27	00011011	1B	91	01011011	5B
28	00011100	1C	92	01011100	5C
29	00011101	1D	93	01011101	5D
30	00011110	1E	94	01011110	5E
31	00011111	1F	95	01011111	5F
32	00100000	20	96	01100000	60
33	00100001	21	97	01100001	61
34	00100010	22	98	01100010	62
35	00100011	23	99	01100011	63
36	00100100	24	100	01100100	64
37	00100101	25	101	01100101	65
38	00100110	26	102	01100110	66
39	00100111	27	103	01100111	67
40	00101000	28	104	01101000	68
41	00101001	29	105	01101001	69
42	00101010	2A	106	01101010	6A
43	00101011	2B	107	01101011	6B
44	00101100	2C	108	01101100	6C
45	00101101	2D	109	01101101	6D
46	00101110	2E	110	01101110	6E
47	00101111	2F	111	01101111	6F
48	00110000	30	112	01110000	70
49	00110001	31	113	01110001	71
50	00110010	32	114	01110010	72
51	00110011	33	115	01110011	73
52	00110100	34	116	01110100	74
53	00110101	35	117	01110101	75
54	00110110	36	118	01110110	76
55	00110111	37	119	01110111	77
56	00111000	38	120	01111000	78
57	00111001	39	121	01111001	79
58	00111010	3A	122	01111010	7A
59	00111011	3B	123	01111011	7B
60	00111100	3C	124	01111100	7C
61	00111101	3D	125	01111101	7D
62	00111110	3E	126	01111110	7E
63	00111111	3F	127	01111111	7F

DEC	BIN	HEX	DEC	BIN	HEX
128	10000000	80	192	11000000	C0
129	10000001	81	193	11000001	C1
130	10000010	82	194	11000010	C2
131	10000011	83	195	11000011	C3
132	10000100	84	196	11000100	C4
133	10000101	85	197	11000101	C5
134	10000110	86	198	11000110	C6
135	10000111	87	199	11000111	C7
136	10001000	88	200	11001000	C8
137	10001001	89	201	11001001	C9
138	10001010	8A	202	11001010	CA
139	10001011	8B	203	11001011	CB
140	10001100	8C	204	11001100	CC
141	10001101	8D	205	11001101	CD
142	10001110	8E	206	11001110	CE
143	10001111	8F	207	11001111	CF
144	10010000	90	208	11010000	D0
145	10010001	91	209	11010001	D1
146	10010010	92	210	11010010	D2
147	10010011	93	211	11010011	D3
148	10010100	94	212	11010100	D4
149	10010101	95	213	11010101	D5
150	10010110	96	214	11010110	D6
151	10010111	97	215	11010111	D7
152	10011000	98	216	11011000	D8
153	10011001	99	217	11011001	D9
154	10011010	9A	218	11011010	DA
155	10011011	9B	219	11011011	DB
156	10011100	9C	220	11011100	DC
157	10011101	9D	221	11011101	DD
158	10011110	9E	222	11011110	DE
159	10011111	9F	223	11011111	DF
160	10100000	A0	224	11100000	E0
161	10100001	A1	225	11100001	E1
162	10100010	A2	226	11100010	E2
163	10100011	A3	227	11100011	E3
164	10100100	A4	228	11100100	E4
165	10100101	A5	229	11100101	E5
166	10100110	A6	230	11100110	E6
167	10100111	A7	231	11100111	E7
168	10101000	A8	232	11101000	E8
169	10101001	A9	233	11101001	E9
170	10101010	AA	234	11101010	EA
171	10101011	AB	235	11101011	EB
172	10101100	AC	236	11101100	EC
173	10101101	AD	237	11101101	ED
174	10101110	AE	238	11101110	EE
175	10101111	AF	239	11101111	EF
176	10110000	B0	240	11110000	F0
177	10110001	B1	241	11110001	F1
178	10110010	B2	242	11110010	F2
179	10110011	B3	243	11110011	F3
180	10110100	B4	244	11110100	F4
181	10110101	B5	245	11110101	F5
182	10110110	B6	246	11110110	F6
183	10110111	B7	247	11110111	F7
184	10111000	B8	248	11111000	F8
185	10111001	B9	249	11111001	F9
186	10111010	BA	250	11111010	FA
187	10111011	BB	251	11111011	FB
188	10111100	BC	252	11111100	FC
189	10111101	BD	253	11111101	FD
190	10111110	BE	254	11111110	FE
191	10111111	BF	255	11111111	FF