THE UNIVERSITY OF AUCKLAND

SEMESTER TWO 2020
Campus: City

COMPUTER SCIENCE

Computer Organisation

(Time Allowed: TWO hours)

NOTE:

- The use of calculators is NOT permitted.
- Compare the exam version number on the Teleform sheet supplied with the version number above. If they do not match, ask the exam supervisor for a new sheet.
- Enter your name and student ID on the Teleform sheet. Your name should be entered left aligned. If your name is longer than the number of boxes provided, truncate it.
- Answer ALL **multiple-choice** questions on the Teleform answer sheet provided.
- Use a dark pencil to mark your answers in the multiple-choice answer boxes on the Teleform sheet. Check that the question number on the sheet corresponds to the question number in this question/answer book. If you spoil your sheet, ask the supervisor for a replacement.
- An appendix is included on the last page. You may detach this appendix.
- This exam is marked out of 100 marks and counts for 50% of your final grade.
- Each question has exactly 1 (one) correct answer. If you believe that a question has either NO or MULTIPLE correct answers, select the ONE you believe is most likely to be the intended answer.
- Some questions have 4 answer options, and some have 5.

Question 1
[1 mark] What is the range of a 6-bit unsigned binary number?

(a) [0 .. 31]
(b) [0 .. 63]
(c) [0 .. 64]
(d) [0 .. 32]
(e) [-32 .. 31]

Question 2
[1 mark] Which is the 8-bit two's complement binary number representing decimal number -20?

(a) 11101011
(b) 10010101
(c) 11010111
(d) 10010100
(e) 11101100

Question 3
[1 mark] What is the decimal value of the 8-bit two's complement number 11100110?

(a) -26
(b) -30
(c) -27
(d) -25
(e) -19

Question 4
[1 mark] Which one of the following statements is **correct**?

(a) In the von Neumann model, the control unit carries out the arithmetic and logical operations specified by the instructions.
(b) In the von Neumann model, the processing unit carries out the arithmetic and logical operations.
(c) In the von Neumann model, all instructions are stored in the control unit.
(d) In the von Neumann model, the processing unit interprets the meaning of the instructions.

Question 5

[1 mark] For the code fragment below, assume that the address for label `A` is `x3400`.

```
A      .BLKW 5
B      .STRINGZ "1234AB"
```

Which one of the following statements is correct?

(a) The address for label `B` is `x3401`.
(b) The address for label `B` is `x3404`.
(c) The value stored at memory location with label `B` is 1.
(d) The address for label `B` is `x3405`.
(e) The value stored at memory address `x3400` is 5.

Read the descriptions below before answering the next FIVE questions.
The contents of the registers are shown below.

register	content
R0	0x0000
R1	0x0000
R2	0x4512
R3	0x450E
R4	0x4512
R5	0x4511
R6	0x0007
R7	0x0000

The contents of some memory locations and the labels given to the memory locations are shown below.

label	address	content
A	x450D	x4514
B	x450E	x450D
C	x450F	x4512
D	x4510	x450E
E	x4511	x4510
F	x4512	x450F
G	x4513	x4511
H	x4514	x4513
J	x4509	x7702
K	x4515	x0007

Question 6

[1 mark] What is the value in R0 after instruction "`LEA R0, A`" is executed?

(a) `x4514`
(b) `x450D`
(c) `x41`
(d) `xA`
(e) `x4513`

Question 7
[2 marks] What is the value in R1 after instruction "`LDI  R1, B`" is executed?

(a) `x450E`
(b) `x42`
(c) `x4514`
(d) `xB`
(e) `x450D`

Question 8
[2 marks] Assume the two instructions below are executed.

```
NOT   R2, R2
ST    R2, E
```

Which one of the statements below is correct?

(a) The execution sets the value at memory address with label `D` to `xBAEE`.
(b) The execution sets the value at memory address with label `E` to `xBAED`.
(c) The execution sets the value at memory address with label `D` to `xBAED`.
(d) The execution sets the value at memory address with label `E` to `xBAEE`.

Question 9
[2 marks] Which one of the statements below is correct?

(a) Instruction "`STR  R3, R4, #2`" sets R4 to `x4510`.
(b) Instruction "`STR  R3, R4, #2`" sets the value at memory location with label `D` to `x4512`.
(c) Instruction "`STR  R3, R4, #2`" sets R3 to `x4514`.
(d) Instruction "`STR  R3, R4, #2`" sets the value at memory location with label `H` to `x450E`.

Question 10
[2 marks] Assume the two instructions below are executed and the address of instruction "`BRp  J`" is `x450B`.

```
AND   R5, R5, R6
BRp   J
```

Which one of the statements below is correct?

(a) The execution of instruction "`AND  R5, R5, R6`" causes the condition code P to be set to 1.
(b) The execution of instruction "`AND  R5, R5, R6`" causes the condition code N to be set to 1.
(c) The instruction that will be executed after instruction "`BRp  J`" is the instruction at address x450C.
(d) The instruction that will be executed after instruction "`BRp  J`" is the instruction at address x450A.

Read the descriptions below before answering the next TWO questions.
The symbol table of a program is given below.

label	address
A	x3305
B	x3306
C	x3307
D	x3301
E	x3300
F	x3302

Question 11
[2 marks] The hexadecimal representation of a machine instruction is `xE204`. The address of the instruction is `x3301`. Which one of the assembly instructions below corresponds to the machine instruction?

(a) `LEA  R1, B`
(b) `LEA  R1, A`
(c) `LEA  R5, C`
(d) `LEA  R5, A`
(e) `LEA  R1, C`

Question 12
[2 marks] What is the machine code of instruction "`BRnp  D`"? The address of the instruction is at `x3303`.

(a) `x05FC`
(b) `x0BFD`
(c) `x05FE`
(d) `x0BFC`
(e) `x0BFE`

Question 13
[2 marks] Which one of the following statements is **correct**?

(a) Only the CPU can write to the status register of an output device.
(b) Only device electronics can write to the control register of an output device.
(c) Only device electronics should place data in the data register of an input device.
(d) Both the CPU and device electronics write data to the data register of an output device.

Question 14
[2 marks] Which one of the following statements is **correct**?

(a) In polling-based I/O, an input device needs to keep on checking the status register to see whether the CPU wants to receive a data item.
(b) In interrupt-driven I/O, the CPU needs to check the status register of the input device to see whether a data item has been received.
(c) In polling-based I/O, an output device needs to keep on checking the data register to see whether the CPU has placed any data in the register.
(d) In interrupt-driven I/O, the I/O device sends an interrupt signal to the CPU when an event occurs.

Question 15
[2 marks] Which one of the following statements is **correct**?

(a) The JSR and JSRR instructions can be distinguished by their opcodes.
(b) For some programs, the JSRR instruction cannot be replaced by the JSR instruction.
(c) The JSR instruction can always be replaced by the TRAP instruction.
(d) During the execution of the JSR instruction, R7 is set to the address of the JSR instruction.

Question 16
[2 marks] Which one of the following statements is **correct**?

(a) When an interrupt occurs, the operating system decides whether it needs to copy the value of R6 to the special register Saved.USP according to the information in the processor status register.
(b) When a user program is interrupted by an I/O interrupt, the values of the processor status register and the PC are pushed to the user stack.
(c) Whenever an interrupt occurs, the value of R6 is pushed to the system stack.
(d) In LC-3, R6 always points to the top element in the system stack.

Question 17
[2 marks] Which one of the following statements is **correct**?

(a) The RTI instruction can be used in users' programs as well as the operating system programs.
(b) When the RTI instruction is executed, the operating system decides whether it needs to copy the value of the special register Saved.USP to R6 according to the information in the processor status register.
(c) The interrupt vector provided by the I/O device is the address of the interrupt service routine.
(d) When the RTI instruction is executed, the processor status register and the PC are restored according to the values stored in the user stack.

Question 18

[2 marks] The truth table of a circuit is as below. *A*, *B* and *C* are the inputs and *D* is the output.

A	*B*	*C*	*D*
0	0	0	0
0	0	1	0
0	1	0	0
0	1	1	1
1	0	0	0
1	0	1	1
1	1	0	1
1	1	1	0

What is the Boolean expression representing the behaviour of the circuit?

(a) $(\bar{A} + B + C) \cdot (A + \bar{B} + C) \cdot (A + B + \bar{C})$
(b) $\bar{A} \cdot \bar{B} \cdot \bar{C} + \bar{A} \cdot \bar{B} \cdot C + \bar{A} \cdot B \cdot \bar{C} + A \cdot \bar{B} \cdot \bar{C} + A \cdot B \cdot C$
(c) $\bar{A} \cdot B \cdot C + A \cdot \bar{B} \cdot C + A \cdot B \cdot C$
(d) $\bar{A} \cdot B \cdot C + A \cdot \bar{B} \cdot C + A \cdot B \cdot \bar{C}$

Read the program below before answering the next four questions.

```
#include <stdio.h>
int main() {
      int x, y, z;
      int *a, *b;
      x = 0x4003;
      y = 5;
      a = &x;
      b = &z;
      z = x - y;
      (*b)++;
      x = z++ - y;
      ++y;
      printf("x = %x\n", x);
      printf("y = %x\n", y);
      printf("z = %x\n", z);
      printf("a = %x\n", a);
      printf("b = %x\n", *b);
}
```

Question 19

[2 marks] Which one of the following statements is **correct**?

(a) The output of "`printf("x = %x\n", x)`" is: `x = 3ff9`
(b) The output of "`printf("x = %x\n", x)`" is: `x = 3ffb`
(c) The output of "`printf("x = %x\n", x)`" is: `x = 3ffa`
(d) The output of "`printf("y = %x\n", y)`" is: `y = 5`
(e) None of the other answers are correct.

Question 20
[2 marks] Which one of the following statements is **correct**?

(a) The output of "`printf("z = %x\n", z)`" is: `z = 4001`
(b) The output of "`printf("z = %x\n", z)`" is: `z = 4000`
(c) The output of "`printf("z = %x\n", z)`" is: `z = 3fff`
(d) The output of "`printf("z = %x\n", z)`" is: `z = 3ffe`
(e) None of the other answers are correct.

Question 21
[2 marks] Which one of the following statements is **correct**?

(a) The output of "`printf("a = %x\n", a)`" is the contents of the memory at address `0x4003`
(b) The output of "`printf("a = %x\n", a)`" is: `a = 3ffa`
(c) The output of "`printf("a = %x\n", a)`" is the address of variable `x`
(d) The output of "`printf("a = %x\n", a)`" is the address of variable `a`
(e) None of the other answers are correct.

Question 22
[2 marks] Which one of the following statements is **correct**?

(a) The output of "`printf("b = %x\n", *b)`" is the memory address of variable `z`
(b) The output of "`printf("b = %x\n", *b)`" is the memory address of variable `b`
(c) The output of "`printf("b = %x\n", *b)`" is: `b = 3fff`
(d) The output of "`printf("b = %x\n", *b)`" is the contents of the memory at address `0x4000`
(e) None of the other answers are correct.

Read the program below before answering the next two questions.

```
#include <stdio.h>
void foo(int *w, int *x, int *y, int *z);
int main() {
      int a = 5, b = 4, c = 0, d = 0;
      foo(&a, &b, &c, &d);
      printf("a = %d\n", a);
      printf("b = %d d = %d\n", b, d);
}
void foo(int *w, int *x, int *y, int *z) {
      while (*x > *y) {
            *w *= --(*x);
            (*z)++;
      }
}
```

Question 23
[2 marks] The output of "`printf("a = %d\n", a)`" is:

(a) `a = 0`
(b) `a = 30`
(c) `a = 15`
(d) `a = 5`
(e) None of the above.

Question 24
[2 marks] The output of "`printf("b = %d d = %d\n", b, d)`" is:

(a) `b = 4 d = 0`
(b) `b = 1 d = 4`
(c) `b = 0 d = 4`
(d) `b = 1 d = 3`
(e) None of the above.

Read the program below before answering the next four questions. A variable of "`unsigned short`" type in C consists of **two bytes**.

```
#include <stdio.h>
int main() {
      unsigned short w = 0xacd6;
      unsigned short x = 0x97f3;
      unsigned short y = 0x210d;
      unsigned short z = 0x85bd;
      w = w & 0xf00e;
      x = x ^ 0x736c;
      y = ~y;
      z = z | 0xbb41;
      printf("w = 0x%04x\n", w);
      printf("x = 0x%04x\n", x);
      printf("y = 0x%04x\n", y);
      printf("z = 0x%04x\n", z);
}
```

Question 25
[1.5 marks] The output of "`printf("w = 0x%04x\n", w)`" is:

(a) `w = 0xfcce`
(b) `w = 0x0000`
(c) `w = 0xa006`
(d) `w = 0xa00e`
(e) None of the above.

Question 26
[1.5 marks] The output of "`printf("x = 0x%04x\n", x)`" is:

(a) `x = 0xf7ff`
(b) `x = 0x0000`
(c) `x = 0x1360`
(d) `x = 0xe49f`
(e) None of the above.

Question 27
[1.5 marks] The output of "`printf("y = 0x%04x\n", y)`" is:

(a) `y = 0x0000`
(b) `y = 0xffff`
(c) `y = 0xdef3`
(d) `y = 0xdef2`
(e) None of the above.

Question 28
[1.5 marks] The output of "`printf("z = 0x%04x\n", z)`" is:

(a) `z = 0xbffd`
(b) `z = 0xffff`
(c) `z = 0x3efc`
(d) `z = 0x8101`
(e) None of the above.

Read the program below before answering the next three questions

```
#include <stdio.h>
int main(int argc, char *argv[]) {
      printf("argc = %d\n", argc);
      printf("[1] = %s\n", argv[1]);
      printf("[2] = %c%c%c\n", *(argv[2] + 2), *argv[3], *argv[2]);
}
```

Assume that the name of the binary executable file of the program is `com` and the program is executed with the command below:

```
./com final exam code 210
```

Question 29
[1 mark] The output of "`printf("argc = %d\n", argc)`" is:

(a) `argc = 4`
(b) `argc = 21`
(c) `argc = 25`
(d) `argc = 5`
(e) None of the above.

Question 30
[1.5 marks] The output of "`printf("[1] = %s\n", argv[1])`" is:

(a) `[1] = f`
(b) `[1] = ./com`
(c) `[1] = exam`
(d) `[1] = final`
(e) None of the above.

Question 31
[1.5 marks] The output of "`printf("[2] = %c%c%c\n", *(argv[2] + 2), *argv[3], *argv[2])`" is:

(a) `[2] = ace`
(b) `[2] = acode exam`
(c) `[2] = acodeexam`
(d) `[2] = nef`
(e) None of the above.

Read the program and the descriptions below before answering the next seven questions.

```
#include <stdio.h>
int w = 1, x = 1;
int main()
{
      int a = 0, b = 0, c = 5;
      int* d = &w;
      int* e = &x;
      while (a < c)
      {
            b = *d + *e;
            *d = *e;
            *e = b;
            a++;
      }
      printf("w = %d, x = %d\n", w, x);
}
```

Assume that (i) rG represents the register pointing to the beginning of the locations where the global variables are stored, (ii) rL denotes the register that records the start of the locations where the local variables are stored, and (iii) the offsets of the variables in the program above are given in the table below. In the table, each capital letter represents an integer.

Variable	Offset
a	A
b	B
c	C
d	D
e	E
w	W
x	X

Question 32
[1 mark] In LC-3, which register points to the beginning of the locations where the global variables are stored?

(a) Register 7
(b) Register 5
(c) Register 6
(d) Register 4
(e) PC

Question 33
[2 marks] What is the offset value D?

(a) -1
(b) 2
(c) -3
(d) -2
(e) 3

Question 34
[2 marks] What is the offset value X?

(a) 0
(b) 2
(c) -1
(d) 1
(e) -2

Question 35
[2 marks] Which one of the following LC-3 instruction sequences will be generated when converting statement "`*d = *e`" to LC-3 assembly language instructions?

(a)
```
LDR   R0,   rL,   #E
LDR   R1,   R0,   #0
LDR   R0,   rL,   #D
STR   R1,   R0,   #0
```
(b)
```
LDR   R0,   rL,   #E
LDR   R1,   rL,   #D
STR   R0,   R1,   #0
```
(c)
```
LDR   R1,   rL,   #E
LDR   R0,   R1,   #0
STR   R0,   rL,   #D
```
(d)
```
LDR   R0,   rL,   #E
STR   R0,   rL,   #D
```
(e)
```
LDR   R0,   rG,   #E
LDR   R1,   rG,   #D
STR   R0,   R1,   #0
```

Question 36

[2 marks] Which one of the following LC-3 instruction sequences will be generated when converting statement "`*e = b`" to LC-3 assembly language instructions?

(a)
```
LDR   R0,   rL,   #B
STR   R0,   rL,   #E
```
(b)
```
LDR   R0,   rL,   #B
LDR   R1,   R0,   #0
LDR   R2,   rL,   #E
STR   R1,   R2,   #0
```
(c)
```
ADD   R0,   rL,   #B
LDR   R1,   rL,   #E
STR   R0,   R1,   #0
```
(d)
```
LDR   R0,   rL,   #B
LDR   R1,   R0,   #0
STR   R1,   rL,   #E
```
(e)
```
LDR   R0,   rL,   #B
LDR   R1,   rL,   #E
STR   R0,   R1,   #0
```

Question 37

[2 marks] Which one of the following LC-3 instruction sequences will be generated when converting statement "`b = *d + *e`" to LC-3 assembly language instructions?

(a)
```
LDR   R0,   rL,   #D
LDR   R1,   rL,   #E
ADD   R0,   R0,   R1
STR   R0,   rL,   #B
```
(b)
```
LDR   R1,   rG,   #D
LDR   R0,   R1,   #0
LDR   R2,   rG,   #E
LDR   R1,   R2,   #0
ADD   R0,   R0,   R1
STR   R0,   rG,   #B
```
(c)
```
LDR   R0,   rL,   #D
LDR   R1,   R0,   #0
LDR   R0,   rL,   #E
LDR   R2,   R0,   #0
ADD   R1,   R1,   R2
STR   R1,   rL,   #B
```
(d)
```
LDR   R1,   rG,   #D
LDR   R2,   rG,   #E
ADD   R1,   R1,   R2
STR   R,    rG,   #B
```
(e)
```
LDR   R0,   rL,   #D
LDR   R1,   R0,   #0
LDR   R0,   rL,   #E
LDR   R1,   R0,   #0
ADD   R0,   R0,   R1
STR   R0,   rL,   $B
```

Question 38

[2 marks] Which one of the following LC-3 instruction sequences will be generated when converting condition "`(a < c)`" of the "`while`" statement to LC-3 assembly language instructions? Label "`PRINT`" should be regarded as the label of the `printf` statement.

(a)
```
LDR   R0,   rL,   #A
NOT   R0,   R0
ADD   R0,   R0,   #1
LDR   R1,   rL,   #C
ADD   R0,   R0,   R1
BRnz  PRINT
```

(b)
```
LDR   R1,   rL,   #A
NOT   R1,   R1
ADD   R1,   R1,   #1
LDR   R2,   rL,   #C
ADD   R1,   R1,   R2
BRzp  PRINT
```

(c)
```
LDR   R0,   rL,   #C
NOT   R0,   R0
ADD   R0,   R0,   #1
LDR   R1,   rL,   #A
ADD   R0,   R0,   R1
BRnz  PRINT
```

(d)
```
LDR   R1,   rL,   #A
NOT   R1,   R1
LDR   R2,   rL,   #C
ADD   R1,   R1,   R2
BRnz  PRINT
```

(e)
```
LDR   R0,   rG,   #A
NOT   R0,   R0
LDR   R1,   rG,   #C
ADD   R0,   R0,   R1
BRnz  PRINT
```

Read the program and the descriptions below before answering the next six questions.

```
#include <stdio.h>
int foo(int a, int *b, int *c);
int main() {
      int u, v, w, x;
      int *y, *z;
      v = 7;
      w = 8;
      x = 2;
      y = &v;
      z = &w;
      u = foo(x, y, z);
}
int foo(int a, int *b, int *c) {
      int d, e, f;
      d = *b - a;
      e = *c + a;
      f = e - d;
      return f;
}
```

The diagram below shows the memory of the machine executing the above program. The address of each memory location is shown next to each location.

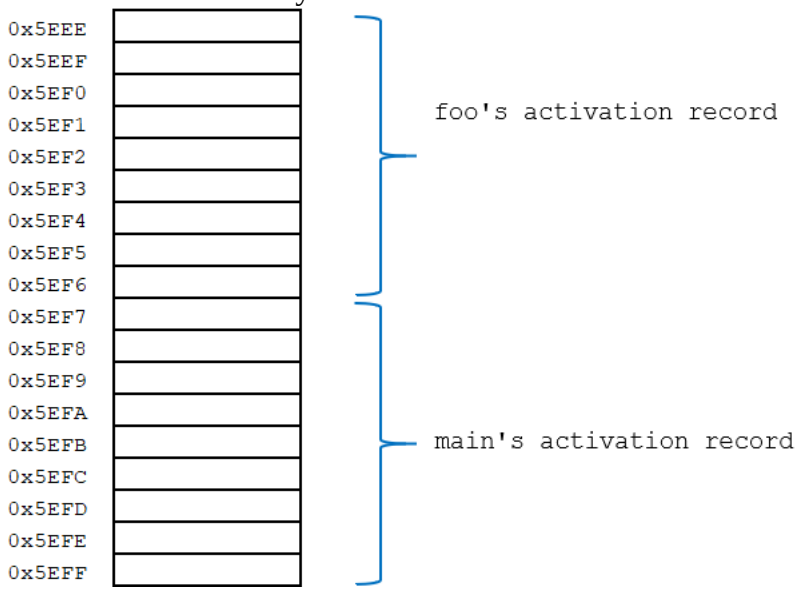

Question 39

[2 marks] The compiler creates a symbol table while compiling the program. In the symbol table, the location of each argument of function foo is recorded as an offset. What is the offset of argument “b” of function foo?

(a) -5
(b) 3
(c) 4
(d) 5
(e) -4

Question 40
[2 marks] Which one of the following statements is **correct**?

(a) The execution of statement "`v = 7`" in the `main` function sets the value at location `0x5EFC` to 7.
(b) The execution of statement "`v = 7`" in the `main` function sets the value at location `0x5EFE` to 7.
(c) The execution of statement "`v = 7`" in the `main` function sets the value at location `0x5EFB` to 7.
(d) The execution of statement "`v = 7`" in the `main` function sets the value at location `0x5EF8` to 7.
(e) The execution of statement "`v = 7`" in the `main` function sets the value at location `0x5EFF` to 7.

Question 41
[2 marks] Which one of the following statements is **correct**?

(a) During the execution of statement "`x = 2`" in the `main` function, the value in register 5 is `0x5EFC`.
(b) During the execution of statement "`w = 8`" in the `main` function, the value in register 5 is `0x5EFF`.
(c) During the execution of statement "`x = 2`" in the `main` function, the value in register 6 is `0x5EEE`.
(d) During the execution of statement "`w = 8`" in the `main` function, the value in register 5 is `0x5EF0`.
(e) During the execution of statement "`x = 2`" in the `main` function, the value in register 5 is `0x5EF7`.

Question 42
[2 marks] Which one of the following statements is **correct**?

(a) The execution of statement "`z = &w`" in the `main` function sets the value at location `0x5EF7` to `8`.
(b) The execution of statement "`z = &w`" in the `main` function sets the value at location `0x5EFA` to `0x5EFD`.
(c) The execution of statement "`y = &v`" in the `main` function sets the value at location `0x5EFB` to `0x5EFE`.
(d) The execution of statement "`y = &v`" in the `main` function sets the value at location `0x5EF8` to `7`.
(e) The execution of statement "`y = &v`" in the `main` function sets the value at location `0x5EF8` to `0x5EFB`.

Question 43
[2 marks] Which one of the following statements is **correct**?

(a) During the execution of statement "`d = *b - a`" in the `foo` function, the value at location `0x5EF1` is `0x5EFC`.
(b) During the execution of statement "`e = *c + a`" in the `foo` function, the value at location `0x5EFD` is `0x5EF1`.
(c) During the execution of statement "`e = *c + a`" in the `foo` function, the value at location `0x5EF1` is `0x5EF0`.
(d) During the execution of statement "`e = *c + a`" in the `foo` function, the value at location `0x5EF1` is `0x5EEE`.
(e) During the execution of statement "`d = *b - a`" in the `foo` function, the value at location `0x5EF1` is `0x5EF7`.

Question 44
[2 marks] Which one of the following statements is **correct**?

(a) The execution of statement "`f = e - d`" in the `foo` function sets the value at location `0x5EEE` to `-5`.
(b) The execution of statement "`f = e - d`" in the `foo` function sets the value at location `0x5EEE` to `5`.
(c) The execution of statement "`f = e - d`" in the `foo` function sets the value at location `0x5EF3` to `-5`.
(d) The execution of statement "`f = e - d`" in the `foo` function sets the value at location `0x5EF1` to `5`.
(e) The execution of statement "`f = e - d`" in the `foo` function sets the value at location `0x5EF3` to `5`.

Read the program and the descriptions below before answering the next four questions.

```
#include <stdio.h>
int main() {
      int a[5] = { 1, 2, 3, 4, 5 };
      int *b, *c;
      b = a + 2;
      c = a;
      a[4] = a[3] + a[4];
      a[3] = *b + 3;
      a[*c + 1] = 10;
}
```

Assume that (i) rX represents the register pointing to the beginning of the locations where the variables are stored, and (ii) the offsets of the variables in the program above are given in the table below. In the table, each capital letter represents an integer.

Variable	Offset
a	A
b	B
c	C

Question 45

[2 marks] Which is the offset value A?

(a) -6
(b) 6
(c) 4
(d) 0
(e) -4

Question 46

[2 marks] Which one of the following LC-3 instruction sequences will be generated when converting statement "`b = a + 2`" to LC-3 assembly language instructions?

(a)
```
LDR   R0,   rX,   #A
ADD   R0,   R0,   #-2
STR   R0,   rX,   #B
```
(b)
```
LDR   R0,   rX,   #A
ADD   R0,   R0,   #2
STR   R0,   rX,   #B
```
(c)
```
ADD   R0,   rX,   #A
ADD   R0,   R0,   #2
STR   R0,   rX,   #B
```
(d)
```
ADD   R0,   rX,   #A
LDR   R1,   R0,   #2
STR   R1,   rX,   #B
```
(e)
```
LDR   R0,   rX,   #A
LDR   R1,   R0,   #0
ADD   R1,   R1,   #2
STR   R1,   rX,   #B
```

Question 47

[2 marks] Which one of the following LC-3 instruction sequences will be generated when converting statement "`a[3] = *b + 3`" to LC-3 assembly language instructions?

(a)
```
LDR   R0,   rX,   #B
ADD   R0,   R0,   #3
ADD   R1,   rX,   #A
STR   R0,   R1,   #3
```

(b)
```
LDR   R0,   rX,   #B
ADD   R0,   R0,   #3
LDR   R1,   rX,   #A
STR   R0,   R1,   #3
```

(c)
```
LDR   R0,   rX,   #B
LDR   R1,   R0,   #0
ADD   R1,   R1,   #3
LDR   R0,   rX,   #A
STR   R1,   R0,   #3
```

(d)
```
LDR   R0,   rX,   #B
ADD   R0,   R0,   #3
ADD   R1,   rX,   #A
STR   R0,   R1,   #-3
```

(e)
```
LDR   R0,   rX,   #B
LDR   R1,   R0,   #0
ADD   R1,   R1,   #3
ADD   R0,   rX,   #A
STR   R1,   R0,   #3
```

Question 48

[2 marks] Which one of the following LC-3 instruction sequences will be generated when converting statement "`a[*c + 1] = 10`" to LC-3 assembly language instructions?

(a)
```
AND   R0,   R0,   #0
ADD   R0,   R0,   #10
LDR   R1,   rX,   #C
LDR   R2,   R1,   #0
ADD   R2,   R2,   #1
ADD   R1,   rX,   #A
STR   R0,   R1,   R2
```

(b)
```
ADD   R0,   R0,   #10
LDR   R1,   rX,   #C
ADD   R1,   R1,   #1
LDR   R2,   rX,   #A
STR   R0,   R1,   R2
```

(c)
```
ADD   R0,   R0,   #10
LDR   R1,   rX,   #C
ADD   R1,   R1,   #A
ADD   R2,   rX,   #A
STR   R0,   R1,   R2
```

(d)
```
AND   R0,   R0,   #0
ADD   R0,   R0,   #10
LDR   R1,   rX,   #C
LDR   R2,   R1,   #0
ADD   R2,   R2,   #1
LDR   R1,   rX,   #A
STR   R0,   R1,   R2
```

(e)
```
AND   R0,   R0,   #0
ADD   R0,   R0,   #10
LDR   R1,   rX,   #C
ADD   R1,   R1,   #1
LDR   R2,   rX,   #A
STR   R0,   R1,   R2
```

Read the descriptions below before answering the next two questions.
A direct mapped cache has 8 cache lines. Each cache line consists of 32 words, and each word is 4 bytes. The address bus consists of 24 bits.

Question 49
[1.5 marks] The total number of bytes for storing data in the cache is

(a) 2^{10}
(b) 2^{20}
(c) 2^{32}
(d) 2^{8}
(e) 2^{30}

Question 50
[1.5 marks] Which one of the following statements is **correct**?

(a) The offset field of the memory address consists of 6 bits.
(b) The tag field of the memory address consists of 14 bits.
(c) The offset field of the memory address consists of 8 bits.
(d) The index field of the memory address consists of 4 bits.
(e) The tag field of the memory address consists of 12 bits.

Read the descriptions below before answering the next four questions. Note that these questions only have four options to choose from.

For a direct mapped cache, the address bus consists of 16 bits. The offset field, the index field and the tag field consist of 8, 2 and 6 bits respectively. Assume the cache is empty to start with. Work out if the following accesses to the given addresses are hits or misses. Each access is numbered with a sequence ID. All addresses are hexadecimal numbers.

Sequence ID	1	2	3	4	5	6	7	8
Address	0732	16A7	07A9	2E81	013E	16BB	2C64	01CA

Question 51
[1.5 marks] Accesses 1 and 2 are respectively

(a) Miss, Miss
(b) Hit, Hit
(c) Hit, Miss
(d) Miss, Hit

Question 52
[1.5 marks] Accesses 3 and 4 are respectively

(a) Miss, Miss
(b) Hit, Miss
(c) Miss, Hit
(d) Hit, Hit

Question 53
[1.5 marks] Accesses 5 and 6 are respectively

(a) Hit, Miss
(b) Miss, Hit
(c) Miss, Miss
(d) Hit, Hit

Question 54
[1.5 marks] Accesses 7 and 8 are respectively

(a) Hit, Hit
(b) Miss, Hit
(c) Miss, Miss
(d) Hit, Miss

Read the descriptions below before answering the next three questions.

Assume that the virtual address of a virtual memory consists of 32 bits, the address of the physical memory consists of 24 bits, and the size of each virtual page is 8KB. The first six entries of the page table are as below.

5	0x211
4	0x5F9
3	0x33E
2	0x4FD
1	0x62A
0	0x765

Question 55
[2 marks] In the virtual address, how many bits are used to represent the virtual page number?

(a) 28
(b) 32
(c) 19
(d) 24
(e) 13

Question 56
[2 marks] What is the virtual page number in the virtual address `0x0054AA9F`?

(a) `0xF9AA4`
(b) `0x2A5`
(c) `0x545`
(d) `0xA`
(e) `0x54A`

Question 57

[2 marks] What is the physical address that corresponds to the virtual address `0x00008EB3`?

(a) `0xBF2EB3`
(b) `0x422EB3`
(c) `0xECAEB3`
(d) `0x67CEB3`
(e) `0x9FAEB3`

This page is intentionally left blank.

Appendix

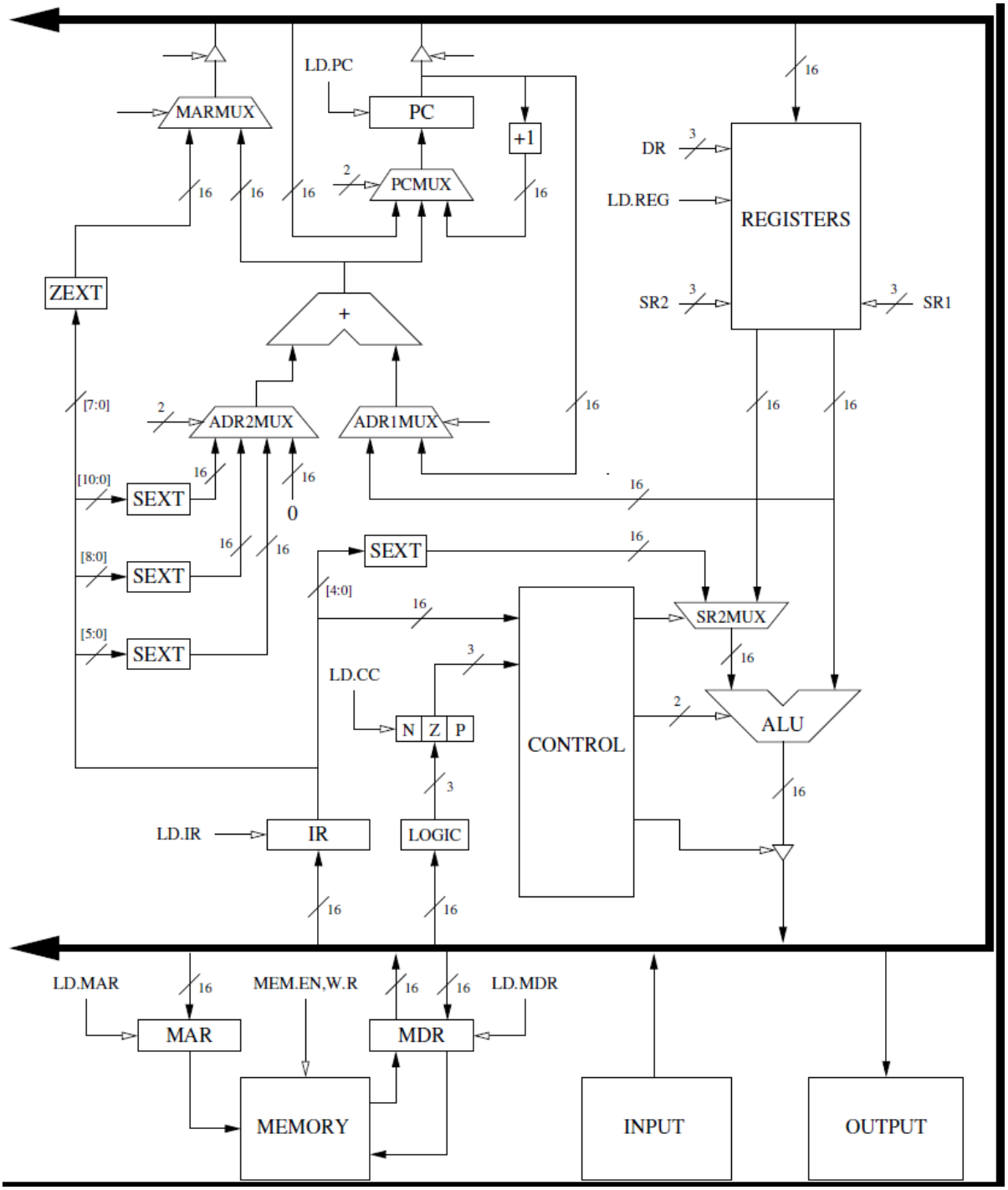
LD.PC
MARMUX
PC
+1
PCMUX
DR
LD.REG
REGISTERS
SR2
SR1
ZEXT
+
ADR2MUX
ADR1MUX
[7:0]
[10:0]
SEXT
0
[8:0]
SEXT
[5:0]
SEXT
SEXT
[4:0]
SR2MUX
LD.CC
N Z P
CONTROL
ALU
LD.IR
IR
LOGIC
LD.MAR
MAR
MEM.EN,W.R
MDR
LD.MDR
MEMORY
INPUT
OUTPUT

A.3 The Instruction Set

	15 14 13 12	11 10 9	8 7 6	5	4 3	2 1 0
ADD+	0001	DR	SR1	0	00	SR2
ADD+	0001	DR	SR1	1	imm5	
AND+	0101	DR	SR1	0	00	SR2
AND+	0101	DR	SR1	1	imm5	
BR	0000	n z p	PCoffset9			
JMP	1100	000	BaseR	000000		
JSR	0100	1	PCoffset11			
JSRR	0100	0 00	BaseR	000000		
LD+	0010	DR	PCoffset9			
LDI+	1010	DR	PCoffset9			
LDR+	0110	DR	BaseR	offset6		
LEA+	1110	DR	PCoffset9			
NOT+	1001	DR	SR	111111		
RET	1100	000	111	000000		
RTI	1000	000000000000				
ST	0011	SR	PCoffset9			
STI	1011	SR	PCoffset9			
STR	0111	SR	BaseR	offset6		
TRAP	1111	0000	trapvect8			
reserved	1101					

Figure A.2 Format of the entire LC-3 instruction set. Note: + indicates instructions that modify condition codes

00	nul	10	dle	20	sp	30	0	40	@	50	P	60	`	70	p
01	soh	11	dc1	21	!	31	1	41	A	51	Q	61	a	71	q
02	stx	12	dc2	22	"	32	2	42	B	52	R	62	b	72	r
03	etx	13	dc3	23	#	33	3	43	C	53	S	63	c	73	s
04	eot	14	dc4	24	$	34	4	44	D	54	T	64	d	74	t
05	enq	15	nak	25	%	35	5	45	E	55	U	65	e	75	u
06	ack	16	syn	26	&	36	6	46	F	56	V	66	f	76	v
07	bel	17	etb	27	'	37	7	47	G	57	W	67	g	77	w
08	bs	18	can	28	(	38	8	48	H	58	X	68	h	78	x
09	ht	19	em	29	)	39	9	49	I	59	Y	69	i	79	y
0a	nl	1a	sub	2a	*	3a	:	4a	J	5a	Z	6a	j	7a	z
0b	vt	1b	esc	2b	+	3b	;	4b	K	5b	[	6b	k	7b	{
0c	np	1c	fs	2c	,	3c	<	4c	L	5c	\	6c	l	7c	|
0d	cr	1d	gs	2d	-	3d	=	4d	M	5d	]	6d	m	7d	}
0e	so	1e	rs	2e	.	3e	>	4e	N	5e	^	6e	n	7e	~
0f	si	1f	us	2f	/	3f	?	4f	O	5f	_	6f	o	7f	del