Use the LC-3 program below to answer the following 3 questions:

```
        .ORIG   x3000
        AND     R0, R0, #0
        AND     R1, R1, #0
        AND     R2, R2, #0
        LD      R3, ASCII
        LEA     R1, hello
lp      LDR     R0, R1, #0
        BRz     finish
        ADD     R1, R1, #1
        NOT     R4, R3
        ADD     R5, R4, R0
        ADD     R5, R5, #1
        BRn     NEXT
        ADD     R5, R5, #-9
        BRp     NEXT
        ADD     R2, R2, #1
        AND     R0, R0, R3
        ADD     R5, R0, #1
NEXT    BRnzp   lp
finish  ADD     R2, R2, #0
        ADD     R0, R2, R3
        TRAP    x21
        HALT
ASCII   .FILL   x0030
hello   .STRINGZ "?" ;? should be replaced by your UPI
        .END
```

Q1) What is the value of the machine code of the instruction “BRn NEXT”? Select one:

a) x02F3
b) x0203
c) x0FF3
d) x0805
e) x040B

Q2) What is the value of the machine code of the instruction “LEA R1, hello”? Select one:

a) xE212
b) x2612
c) x0FF3
d) x02F3
e) x6040

Q3) What is the value printed on the console after the completion of this program? Select one:

a) 3
b) 4
c) 5
d) 7
e) 6

Use the LC-3 program to answer the following question:

```
            .ORIG   x3000
            AND     R0, R0, #0
            AND     R1, R1, #0
            AND     R2, R2, #0
            LD      R3, ASCII
            LEA     R1, hello
lp          LDR     R0, R1, #0
            BRz     finish
            ADD     R1, R1, #1
            NOT     R4, R3
            ADD     R5, R4, R0
            ADD     R5, R5, #1
            BRn     NEXT
            ADD     R5, R5, #-9
            BRp     NEXT
            ADD     R2, R2, #1
            AND     R0, R0, R3
            ADD     R5, R0, #4
NEXT        BRnzp   lp
finish      ADD     R2, R2, #3
            ADD     R0, R2, R3
            TRAP    x21
            HALT
ASCII       .FILL   x0030
hello       .STRINGZ "?" ;? should be replaced by your UPI
            .END
```

Q4) What is the value of register R5 after the completion of this program? Select one:

a) x0035
b) x0034
c) x0032
d) x0033
e) x0031

Use the LC-3 program below to answer the following 2 questions:

```
 1            .ORIG   x3000
 2            AND     R2, R2, #0
 3            ADD     R2, R2, #6
 4            LD      R6, EMPTY
 5            LEA     R1, hello
 6            LDR     R1, R1, #0
 7            JSR     Push          ; First Push
 8            ADD     R1, R2, #1
 9            JSR     Push          ; Second Push
10            JSR     Pop           ; First Pop
11            ADD     R0, R1, #0
12            ADD     R1, R2, #2
13            JSR     Push          ; Third Push
14            JSR     Pop           ; Second Pop
15            ADD     R0, R1, #0
16            JSR     Pop           ; Third Pop
17            ADD     R0, R1, #0
18            BRnzp   EXIT
19   Push     STR     R1, R6, #0
20            ADD     R6, R6, #-1
21            RET
22   Pop      ADD     R6, R6, #1
23            LDR     R1, R6, #0
24            RET
25   EMPTY    .FILL   x4000
26   EXIT     TRAP    x25           ; Halt
27   hello    .STRINGZ "?" ;? should be replaced by your UPI
28            .END
29
```

Q5) What is the value of R6 after the execution of the instruction “JSR Push” at line 9? Select one:

a) x3FFF
b) x3FFE
c) x3FFD
d) x4000
e) x3FFC

Q6) What is the value of the machine code of the instruction “JSR Push” at line 7? Select one:

a) x4805
b) x4806
c) x4809
d) x4807
e) x480B

Use the LC-3 program below to answer the following question:

```
1            .ORIG   x3000
2            AND     R2, R2, #0
3            ADD     R2, R2, #8
4            LD      R6, EMPTY
5            LEA     R1, hello
6            LDR     R1, R1, #0
7            JSR     Push          ; First Push
8            ADD     R1, R2, #1
9            JSR     Push          ; Second Push
10           JSR     Pop           ; First Pop
11           ADD     R0, R1, #0
12           ADD     R1, R2, #2
13           JSR     Push          ; Third Push
14           JSR     Pop           ; Second Pop
15           ADD     R0, R1, #0
16           JSR     Pop           ; Third Pop
17           ADD     R0, R1, #0
18           BRnzp   EXIT
19   Push    STR     R1, R6, #0
20           ADD     R6, R6, #-1
21           RET
22   Pop     ADD     R6, R6, #1
23           LDR     R1, R6, #0
24           RET
25   EMPTY   .FILL   x4000
26   EXIT    TRAP    x25           ; Halt
27   hello   .STRINGZ "?" ;? should be replaced by your UPI
28           .END
29
```

Q7) What is the value of R0 after the execution of the instruction “ADD R0, R1, #0” at line 11? Select one:

a) x0008
b) x000A
c) x000B
d) x0009
e) x0007

Use the LC-3 program below to answer the following question:

```
1            .ORIG   x3000
2            AND     R2, R2, #0
3            ADD     R2, R2, #7
4            LD      R6, EMPTY
5            LEA     R1, hello
6            LDR     R1, R1, #0
7            JSR     Push          ; First Push
8            ADD     R1, R2, #1
9            JSR     Push          ; Second Push
10           JSR     Pop           ; First Pop
11           ADD     R0, R1, #0
12           ADD     R1, R2, #2
13           JSR     Push          ; Third Push
14           JSR     Pop           ; Second Pop
15           ADD     R0, R1, #0
16           JSR     Pop           ; Third Pop
17           ADD     R0, R1, #0
18           BRnzp   EXIT
19   Push    STR     R1, R6, #0
20           ADD     R6, R6, #-1
21           RET
22   Pop     ADD     R6, R6, #1
23           LDR     R1, R6, #0
24           RET
25   EMPTY   .FILL   x4000
26   EXIT    TRAP    x25           ; Halt
27   hello   .STRINGZ "?" ;? should be replaced by your UPI
28           .END
29
```

Q8) What is the value of R0 after the execution of the instruction “ADD R0, R1, #0” at line 15? Select one:

a) x0008
b) x0009
c) x000C
d) x000B
e) x000A

According to the memory architecture below, which cell should be selected if the address A (A3A2A1A0) is "1111_2"?

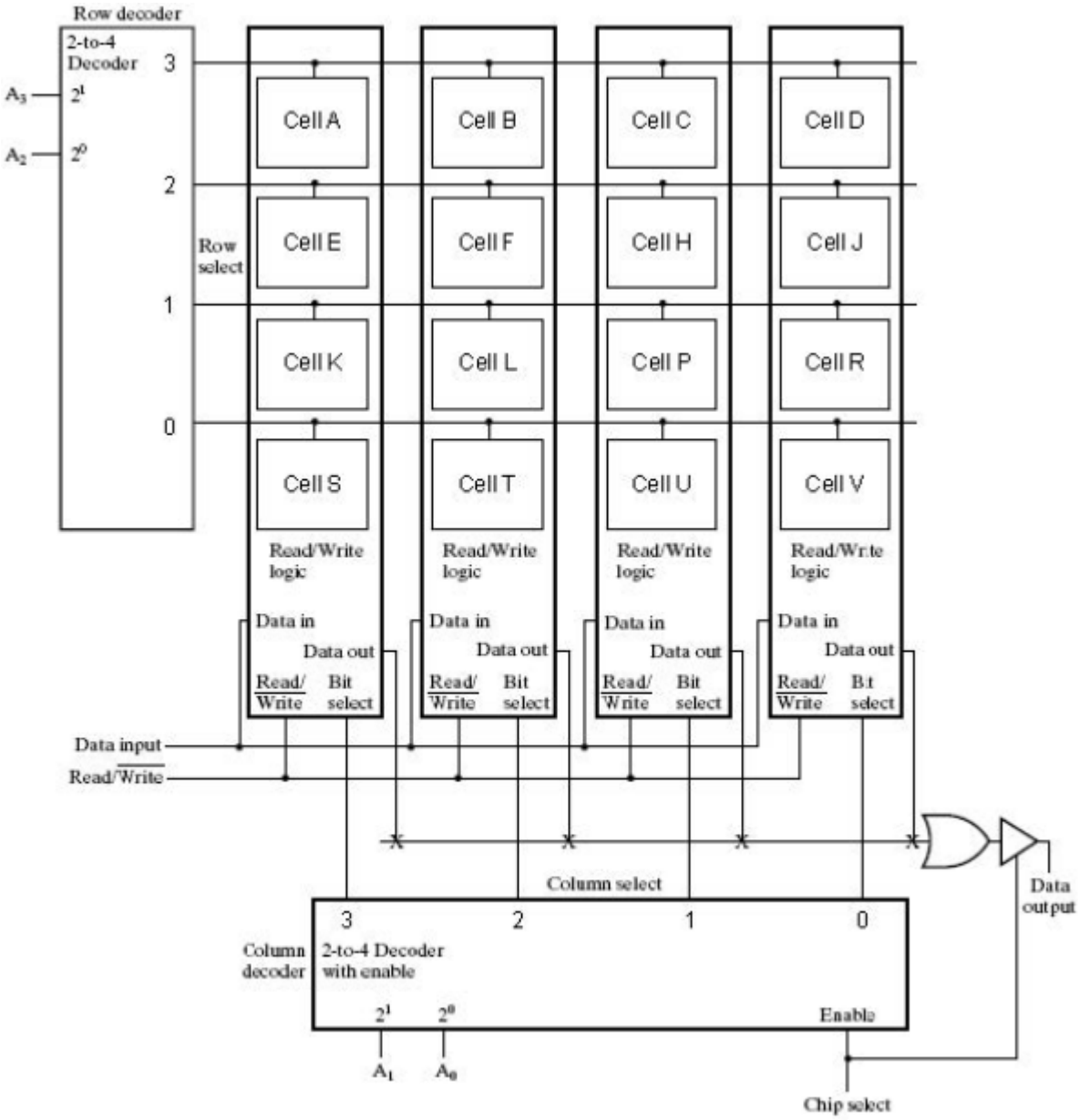

Q9) Select one:

a) CELL A
b) CELL P
c) CELL V
d) CELL E
e) CELL F

Q10) Given that the inputs (I) and the outputs (Y) of the 4-to-16 decoder are I(3:0) and Y respectively. What should Y be if I is 1001_2? Select one:

a) 0000 0000 0000 10002
b) 0001 0000 0000 00002
c) 0000 0000 1000 00002
d) 0000 0010 0000 00002
e) 0000 0000 0010 00002

Q11) What is the minimum number of bits for representing the opcode if there are 31 different instructions? Select one:

a) 6
b) 4
c) 7
d) 8
e) 5

Q12) What is the decimal value of 10001000_2 which is an 8-bit two's complement representation? Select one:

a) -53
b) -18
c) -46
d) -120
e) -78

Q13) What is the machine code of the instruction "AND R3, R3, #0"? Select one:

a) x127F
b) x56E0
c) x5B04
d) x98BF
e) x16C2

Q14) According to the below state machine, if the current state is C, what are the next state and the output if the input is 0?

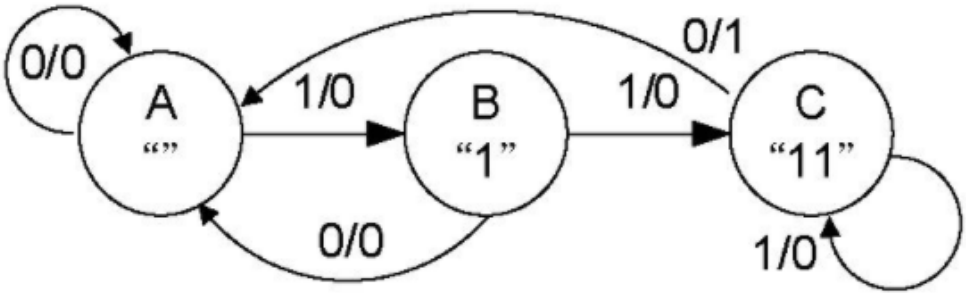

Select one:

a) A and 0
b) A and 1
c) C and 1
d) B and 0
e) C and 0

Q15) According to the LC3 data path below, which component is used to control the selection of source values for the MAR (Memory Address Register)?

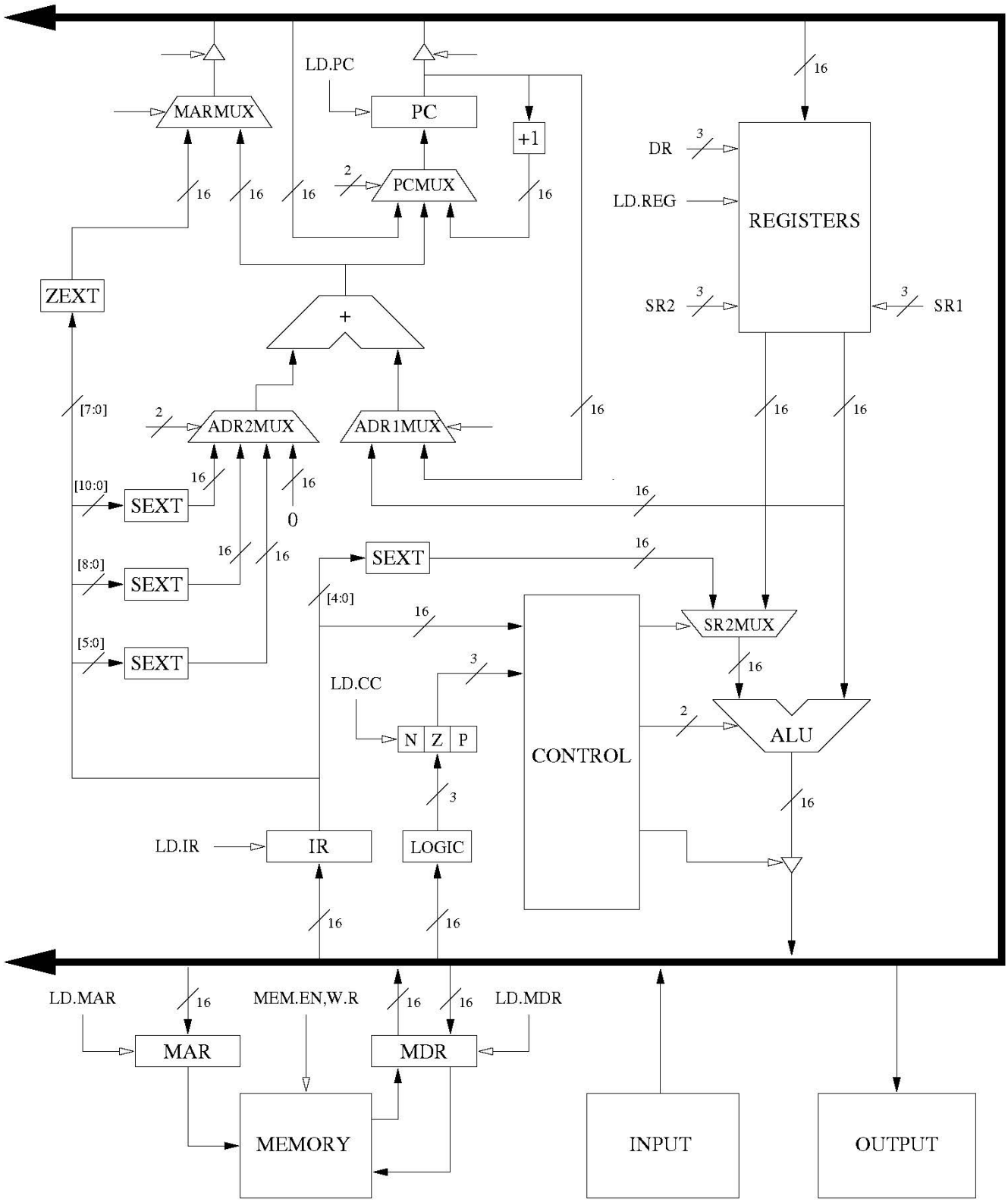

Select one:

a) Register File (Registers)
b) MARMUX
c) Finite State Machine (Control)
d) ALU
e) PCMUX

Q16) What is the meaning of the directive ".BLKW"? Select one:

a) Allocate a number of initialised characters and a null terminator for that label
b) Allocate a word of storage for that label with an initialised value
c) Indicate that it is the end of the program
d) Define the starting address of the program
e) Allocate a number of words of storage for that label

Q17) Which of the following characterises a register compared to memory? Select one:

a) One address can be accessed at a time
b) Faster
c) Read-only
d) Smaller area per data-bit
e) Cheaper per data-bit

Read the program and the descriptions below before answering the next 6 questions.

```
#include <stdio.h>
int w = -1, x = 3, y = -5, z = 7;
int main() {
      int a = 4, b = 3, c = 2, d = 1;
      while (b >= -2) {
            b = b + w;
            y = z - d;
      }
      printf("b = %d y = %d\n", b, y);
}
```

Assume that (i) rG represents the register pointing to the beginning of the locations where the global variables are stored, (ii) rL denotes the register that records the start of the locations where the local variables are stored, and (iii) the offsets of the variables in the program above are given in the table below. In the table, each capital letter represents an integer.

Variable	Offset
a	A
b	B
c	C
d	D
w	W
x	X
y	Y
z	Z

Q18) What is the offset value C? Select one:

a) 2
b) -3
c) 0
d) -2
e) -1

Q19) What is the offset value W? Select one:

a) 2
b) -1
c) 0
d) -2
e) 1

Q20) In LC-3, which register points to the beginning of the location where the local variables are stored? Select one:

a) Register 4
b) PC
c) Register 6
d) Register 5
e) Register 7

Which one of the following LC-3 instruction sequences will be generated when converting condition (b >= -2) of the while statement to LC-3 assembly language instructions? The label PRINT should be regarded as the label of the printf statement.

Select one:

a)
```
LDR   R0,   rL,   #B
ADD   R1,   R0,   #2
BRn   PRINT
```

b)
```
LDR   R0,   rL,   #B
ADD   R1,   R0,   #-2
BRzp  PRINT
```

c)
```
LDR   R0,   rL,   #B
ADD   R1,   R0,   #2
BRzp  PRINT
```

d)
```
LDR   R0,   rG,   #B
ADD   R1,   R0,   #2
BRp   PRINT
```

e)
```
LDR   R0,   rL,   #B
ADD   R1,   R0,   #-2
BRn   PRINT
```

Q22) Assume that the value of variable b is in Register 0 and the value of variable w is in Register 1. Which one of the following LC-3 instruction sequences will be generated when converting the statement b = b + w; to LC-3 assembly language instructions? Select one:

a)
```
ADD    R2,   R0,   R1
STR    R1,   rL,   #B
```

b)
```
ADD    R0,   R0,   R1
STR    R0,   rG,   #B
```

c)
```
ADD    R2,   R0,   R1
STR    R2,   rG,   #B
```

d)
```
ADD    R0,   R1,   R2
STR    R2,   rL,   #B
```

e)
```
ADD    R0,   R0,   R1
STR    R0,   rL,   #B
```

Q23) Assume that the value of variable z is in Register 0 and the value of variable d is in Register 1. Which one of the following LC-3 instruction sequences will be generated when converting statement y = z - d; to LC-3 assembly language instructions? The label WHILE should be regarded as the label of the while statement. Select one:

a)
```
NOT    R1,   R1
ADD    R1,   R1,   #1
ADD    R2,   R0,   R1
STR    R2,   rL,   #Y
BRnzp WHILE
```

b)
```
NOT    R1,   R1
ADD    R1,   R1,   #1
ADD    R2,   R0,   R1
STR    R2,   rG,   #Y
BRnzp  WHILE
```

c)
```
NOT    R0,   R0
ADD    R2,   R0,   R1
STR    R2,   rL,   #Y
BRnzp  WHILE
```

d)
```
NOT    R1,   R1
ADD    R2,   R0,   R1
STR    R2,   rG,   #Y
BRnzp  WHILE
```

e)
```
NOT    R0,   R0
ADD    R0,   R0,   #1
ADD    R2,   R0,   R1
STR    R2,   rG,   #Y
BRnzp  WHILE
```

Read the program and the descriptions below before answering the next six questions.

```
#include <stdio.h>
int foo(int *a, int *b, int c);
int main() {
   int w, x;
   int *y, *z;
   y = &x;
   z = &w;
   w = 4;
   x = 5;
   w = foo(y, z, x);
}
int foo(int *a, int *b, int c) {
   int m, n;
   int *p;
   p = b;
   m = *a + c;
   (*p) = 12;
   n = *b + m;
   return m;
}
```

The diagram below shows the memory of the machine executing the above program. The address of each memory location is shown next to each location.

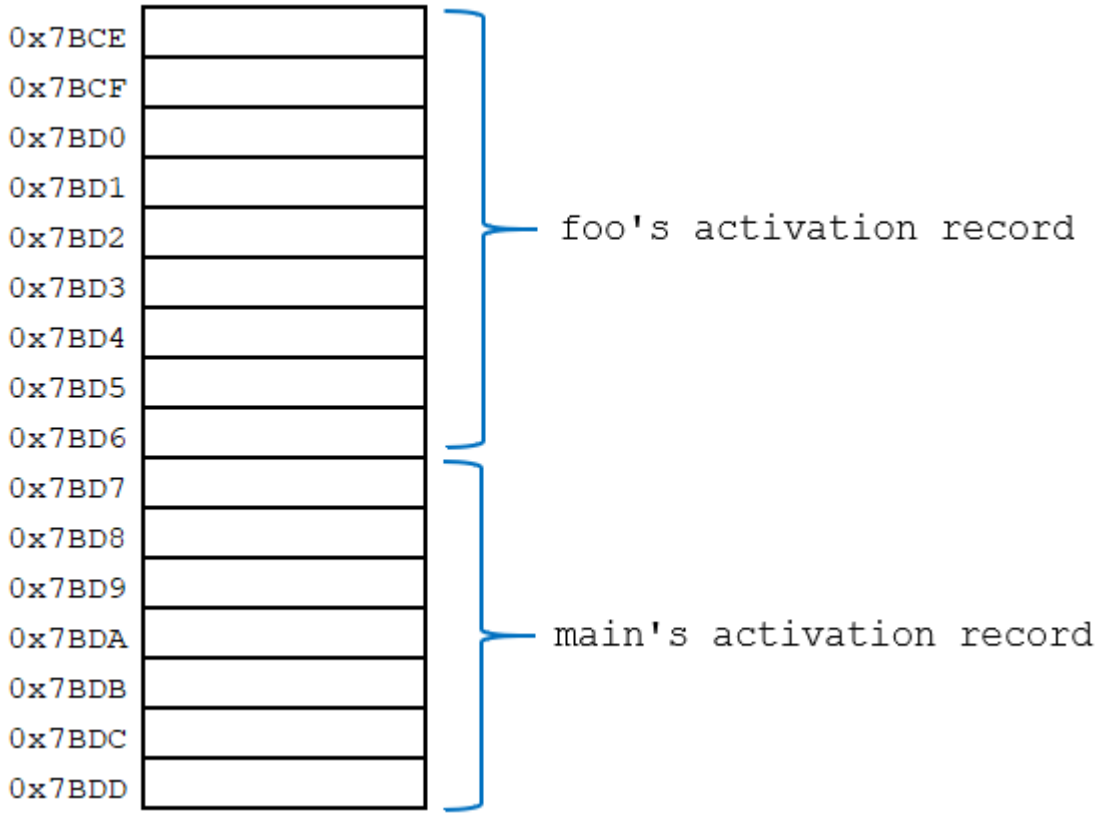

Q24) The compiler creates a symbol table while compiling the program. In the symbol table, the location of each argument of function foo is recorded as an offset. What is the offset of argument b of function foo()? Select one:

a) -1
b) 0
c) 5
d) 1
e) 4

Q25) Which of the following statements is correct? Select one:

a) The execution of the statement y = &x; in the main() function sets the value at location 0x7BDA to 0x7BDD.
b) The execution of the statement y = &x; in the main() function sets the value at location 0x7BD8 to 0x7BD9.
c) The execution of the statement y = &x; in the main() function sets the value at location 0x7BDC to 0x7BDB.
d) The execution of the statement y = &x; in the main() function sets the value at location 0x7BDB to 0x7BDC.
e) The execution of the statement y = &x; in the main() function sets the value at location 0x7BD9 to 0x7BD8.

Q26) Which one of the following statements is correct? Select one:

a) During the execution of the statement z = &w; in the main() function the value in Register 5 is 0x7BD7.
b) During the execution of the statement z = &w; in the main() function the value in Register 6 is 0x7BDA.
c) During the execution of the statement z = &w; in the main() function the value in Register 5 is 0x7BD8.
d) During the execution of the statement z = &w; in the main() function the value in Register 6 is 0x7BD7.
e) During the execution of the statement z = &w; in the main() function the value in Register 6 is 0x7BCE.

Q27) Which one of the following statements is correct? Select one:

a) The execution of the statement m = *a + c; in the foo() function sets the value at location 0x7BD0 to 10.
b) The execution of the statement m = *a + c; in the foo() function sets the value at location 0x7BCE to 10.
c) The execution of the statement m = *a + c; in the foo() function sets the value at location 0x7BCE to 0x7BDE.
d) The execution of the statement m = *a + c; in the foo() function sets the value at location 0x7BD0 to 0x7BDE.
e) The execution of the statement m = *a + c; in the foo() function sets the value at location 0x7BD6 to 10.

Q28) Which one of the following statements is correct? Select one:

a) The execution of the statement n = *b + m; in the foo() function sets the value at location 0x7BCF to 22.
b) The execution of the statement n = *b + m; in the foo() function sets the value at location 0x7BCF to 0x7BE2.
c) The execution of the statement n = *b + m; in the foo() function sets the value at location 0x7BCF to 14.
d) The execution of the statement n = *b + m; in the foo() function sets the value at location 0x7BD5 to 14.
e) The execution of the statement n = *b + m; in the foo() function sets the value at location 0x7BCF to 0x7BF0.

Q29) Which of the following statements is correct? Select one:

a) When function foo() is converted to LC-3 assembly language instructions, the assembly instructions contain code for storing the value of Register 5 in the activation record of function foo().
b) When function foo() is converted to LC-3 assembly language instructions, the assembly instructions contain code for removing the complete activation record of function foo() from the run-time stack.
c) When function foo() is converted to LC-3 assembly language instructions, the assembly instructions contain code for copying arguments to the activation record of function foo().
d) When function foo() is converted to LC-3 assembly language instructions, the assembly instructions contain code for creating the complete activation record of function foo().
e) When function foo() is converted to LC-3 assembly language instructions, the assembly instructions contain code for copying the return value to variable w of function main().

Read the program and the descriptions below before answering the next four questions.

```
#include <stdio.h>
int main() {
      int a = 0x10;
      int b[7] = {1, 2, 3, 4, 5, 6, 7};
      int *c;
      c = b + 4;
      b[2] = a;
      b[6] = *c + 5;
}
```

Assume that (i) rX represents the register pointing to the beginning of the locations where the variables are stored, and (ii) the offsets of the variables in the program above are given in the table below. In the table, each capital letter represents an integer.

Variable	Offset
a	A
b	B
c	C

Q30) What is the offset value B? Select one:

a) -7
b) 0
c) 1
d) -1
e) 7

Q31) Which one of the following LC-3 instruction sequences will be generated when converting statement c = b + 4; to LC-3 assembly language instructions? Select one:

```
a) ADD   R1,   rX,   #B
   ADD   R1,   R1,   #4
   STR   R1,   rX,   #C

b) ADD   R1,   rX,   #B
   ADD   R1,   R1,   #4
   LDR   R1,   R1,   #0
   STR   R1,   rX,   #C

c) LDR   R0,   rX,   #B
   ADD   R0,   R1,   #4
   STR   R0,   rX,   #C

d) AND   R1,   R1,   #0
   ADD   R1,   R1,   #B
   ADD   R1,   R1,   #4
   STR   R1,   rX,   #C

e) ADD   R0,   rX,   #B
   LDR   R0,   R0,   #4
   STR   R0,   rX,   #C
```

Q32) Which one of the following LC-3 instruction sequences will be generated when converting statement b[2] = a; to LC-3 assembly language instructions? Select one:

```
a) LDR   R0,   rX,   #A
   ADD   R1,   rX,   #B
   STR   R0,   R1,   #2

b) LDR   R0,   rX,   #A
   ADD   R1,   rX,   #B
   STR   R0,   R1,   #-2

c) LDR   R0,   rX,   #A
   ADD   R1,   rX,   #B
   STR   R0,   R1,   #3

d) LDR   R0,   rX,   #A
   ADD   R1,   rX,   #B
   STR   R0,   rX,   #-3

e) LDR   R0,   rX,   #A
   ADD   R1,   rX,   #B
   STR   R0,   rX,   #-2
```

Q33) Which one of the following LC-3 instruction sequences will be generated when converting statement b[6] = *c + 5; to LC-3 assembly language instructions? Select one:

a)
```
LDR   R0,   rX,   #C
ADD   R0,   R0,   #5
ADD   R1,   rX,   #B
STR   R0,   R1,   #6
```

b)
```
LDR   R0,   rX,   #C
ADD   R0,   R0,   #5
ADD   R1,   rX,   #B
STR   R0,   R1,   #-6
```

c)
```
LDR   R0,   rX,   #C
ADD   R0,   R0,   #5
ADD   R1,   rX,   #B
STR   R0,   rX,   #6
```

d)
```
LDR   R0,   rX,   #C
LDR   R1,   R0,   #0
ADD   R1,   R1,   #5
ADD   R0,   rX,   #B
STR   R1,   R0,   #6
```

e)
```
LDR   R0,   rX,   #C
LDR   R1,   R0,   #0
ADD   R1,   R1,   #5
ADD   R0,   rX,   #B
STR   R1,   R0,   #-6
```

Read the following description before answering the next two questions. A direct mapped cache has 16 cache lines. Each cache line consists of 8 words, and each word is 4 bytes. The address bus consists of 16 bits.

Q34) How much data, in bytes, can the cache store? Select one:

a) 29
b) 25
c) 24
d) 26
e) 216

Q35) Which of the following statements is correct? Select one:

a) The offset field of the memory address consists of 3 bits.
b) The offset field of the memory address consists of 8 bits.
c) The index field of the memory address consists of 9 bits.
d) The tag field of the memory address consists of 5 bits.
e) The index field of the memory address consists of 4 bits.

Read the following description before answering the next four questions. For a direct mapped cache, the address bus consists of 16 bits. The offset field, the index field and the tag field consist of 4, 3 and 9 bits respectively. Assume the cache is empty to start with. Work out if the following accesses to the given addresses are hits or misses. Each access is numbered with a sequence ID. All addresses are hexadecimal numbers.

Sequence ID	1	2	3	4	5	6	7	8
Address	0083	01BA	008D	00DB	01B7	018E	01D1	0184

Q36) Accesses 1 and 2 are respectively: Select one:

a) Miss, Miss
b) Hit, Miss
c) Miss, Hit
d) Hit, Hit

Q37) Accesses 3 and 4 are respectively: Select one:

a) Hit, Hit
b) Hit, Miss
c) Miss, Miss
d) Miss, Hit

Q38) Accesses 5 and 6 are respectively: Select one:

a) Hit, Miss
b) Miss, Hit
c) Hit, Hit
d) Miss, Miss

Q39) Accesses 7 and 8 are respectively: Select one:

a) Hit, Hit
b) Miss, Miss
c) Miss, Hit
d) Hit, Miss

Read the following description before answering the next three questions. Assume that the virtual address of a virtual memory consists of 36 bits, the address of the physical memory consists of 28 bits, and the size of each virtual page is 16kB. The first six entries of the page table are shown below.

5	0x321
4	0x654
3	0x879
2	0x1BC
1	0x2DE
0	0x314

Q40) In the virtual address, how many bits are used to represent the virtual page number? Select one:

a) 28
b) 22
c) 16
d) 14
e) 36

Q41) What is the virtual page number in the virtual address 0x004A21CB9? Select one:

a) 0x001288
b) 0x04A21C
c) 0x004A21
d) 0x012887
e) 0x001CB9

Q42) What is the physical address that corresponds to virtual address 0x000012E75? Select one:

a) 0x6542E75
b) 0xB9D5950
c) 0x2E75654
d) 0x654B9D4
e) 0x1952E75

Q43) Which one of the following statements is correct? Select one:

a) The size of a physical page must be larger than the size of a virtual page.
b) A null entry in the page table means the corresponding virtual page resides on disk.
c) A page fault always causes the execution of a program to be terminated.
d) The dirty bit in a page table entry indicates whether the corresponding page has been swapped out.
e) A page table is stored in the main memory.