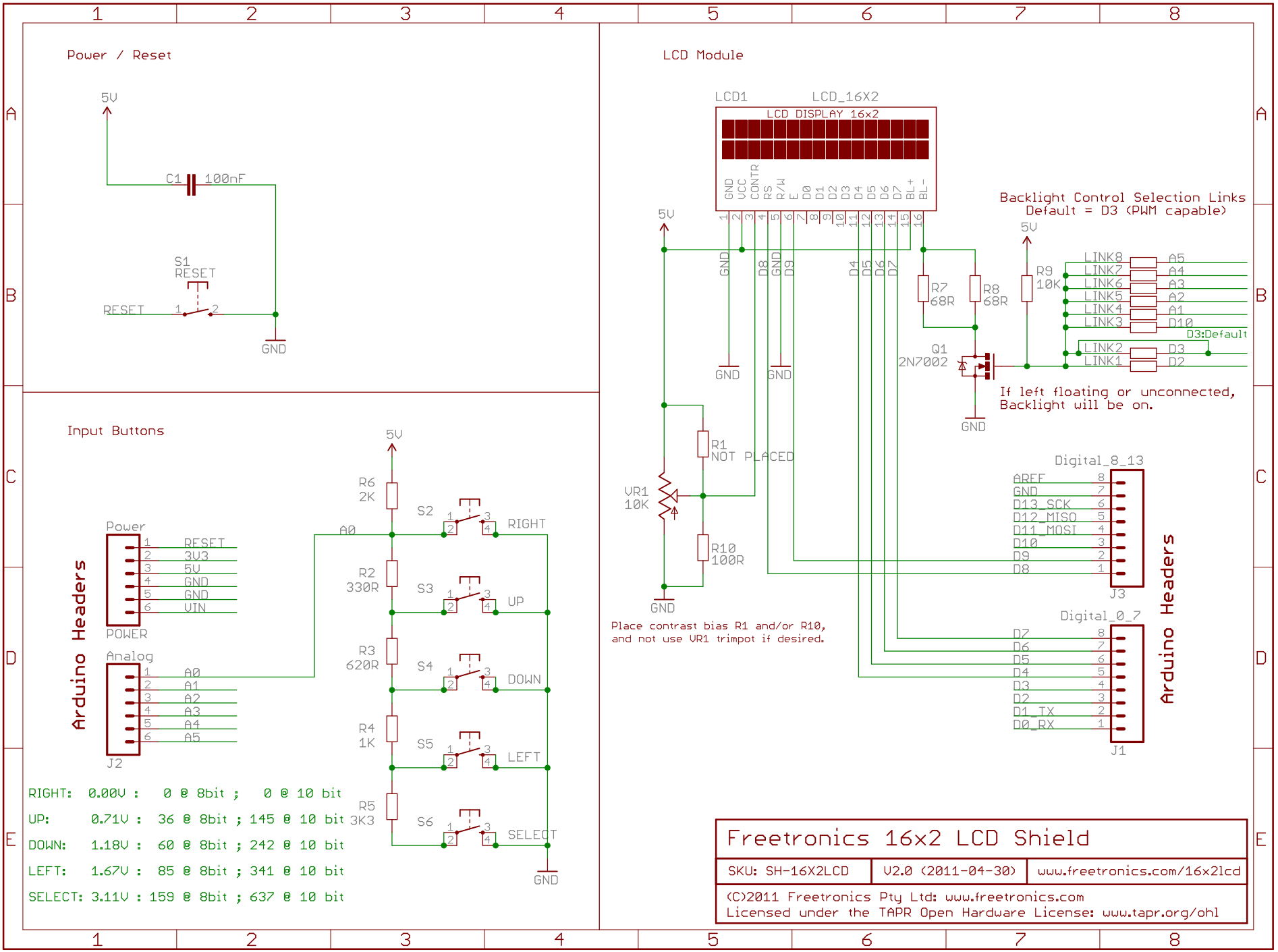
Power / Reset
5V
C1 100nF
S1
RESET
RESET
GND
LCD Module
LCD1 LCD_16X2
LCD DISPLAY 16x2
GND VCC CONTR RS R/W E D0 D1 D2 D3 D4 D5 D6 D7 BL+ BL-
Backlight Control Selection Links
Default = D3 (PWM capable)
R7 68R
R8 68R
R9 10K
Q1 2N7002
LINK8 A5
LINK7 A4
LINK6 A3
LINK5 A2
LINK4 A1
LINK3 D10
D3:Default
LINK2 D3
LINK1 D2
If left floating or unconnected, Backlight will be on.
R1 NOT PLACED
VR1 10K
R10 100R
Place contrast bias R1 and/or R10, and not use VR1 trimpot if desired.
Digital_8_13
AREF GND D13_SCK D12_MISO D11_MOSI D10 D9 D8
J3
Digital_0_7
D7 D6 D5 D4 D3 D2 D1_TX D0_RX
J1
Arduino Headers
Input Buttons
Power
RESET 3V3 5V GND GND VIN
POWER
Analog
A0 A1 A2 A3 A4 A5
J2
R6 2K
R2 330R
R3 620R
R4 1K
R5 3K3
S2 RIGHT
S3 UP
S4 DOWN
S5 LEFT
S6 SELECT
RIGHT: 0.00V : 0 @ 8bit ; 0 @ 10 bit
UP: 0.71V : 36 @ 8bit ; 145 @ 10 bit
DOWN: 1.18V : 60 @ 8bit ; 242 @ 10 bit
LEFT: 1.67V : 85 @ 8bit ; 341 @ 10 bit
SELECT: 3.11V : 159 @ 8bit ; 637 @ 10 bit
Freetronics 16x2 LCD Shield
SKU: SH-16X2LCD
V2.0 (2011-04-30)
www.freetronics.com/16x2lcd
(C)2011 Freetronics Pty Ltd: www.freetronics.com
Licensed under the TAPR Open Hardware License: www.tapr.org/ohl