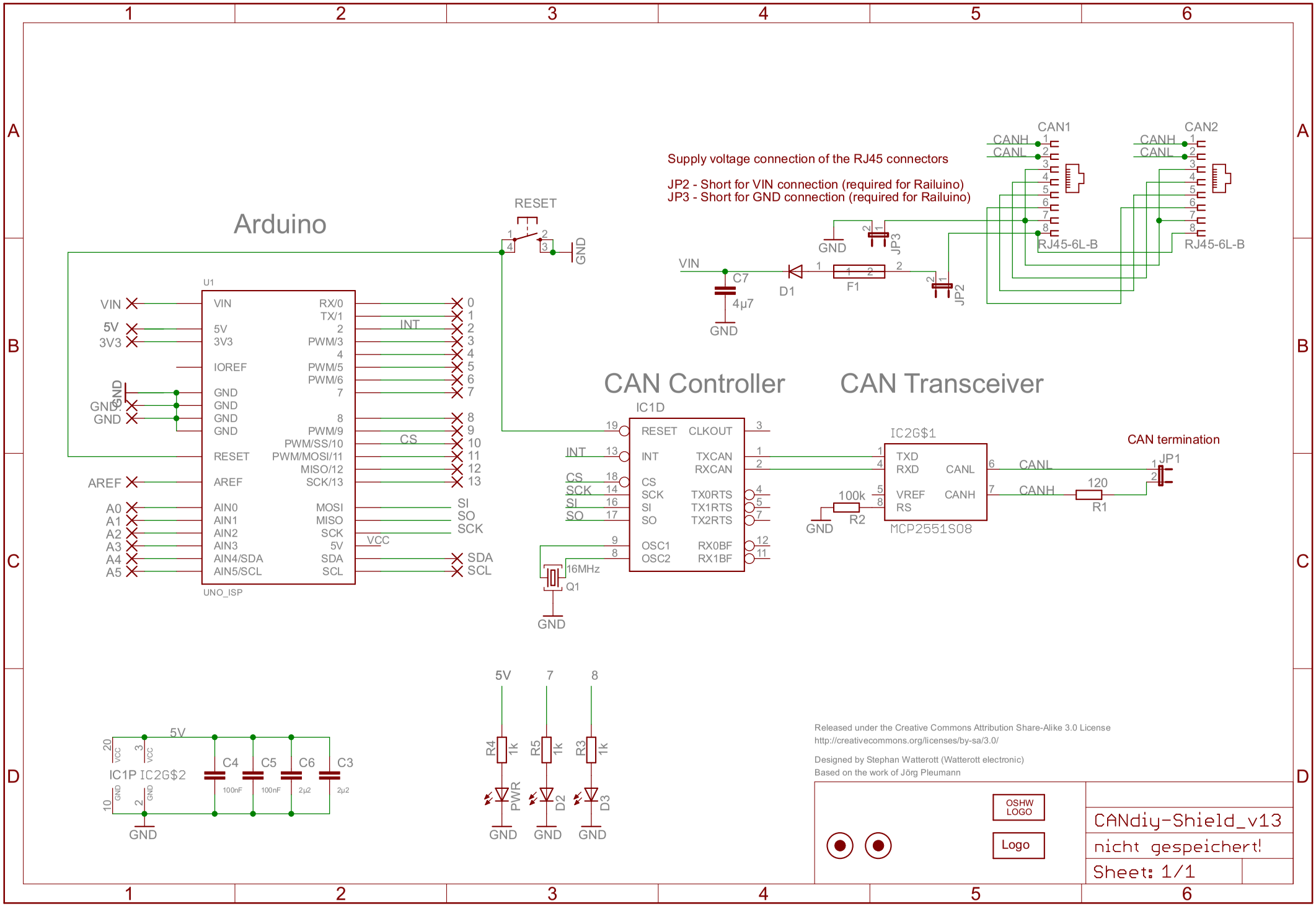
Arduino
U1
VIN
5V
3V3
IOREF
GND
RESET
AREF
A0
A1
A2
A3
A4
A5
AIN0
AIN1
AIN2
AIN3
AIN4/SDA
AIN5/SCL
RX/0
TX/1
PWM/3
PWM/5
PWM/6
PWM/9
PWM/SS/10
PWM/MOSI/11
MISO/12
SCK/13
MOSI
MISO
SCK
SDA
SCL
INT
CS
SI
SO
VCC
UNO_ISP
RESET
GND
Supply voltage connection of the RJ45 connectors
JP2 - Short for VIN connection (required for Railuino)
JP3 - Short for GND connection (required for Railuino)
CAN1
CAN2
CANH
CANL
RJ45-6L-B
JP3
JP2
C7
4µ7
D1
F1
CAN Controller
CAN Transceiver
IC1D
RESET
CLKOUT
INT
TXCAN
RXCAN
CS
SCK
SI
SO
TX0RTS
TX1RTS
TX2RTS
OSC1
OSC2
RX0BF
RX1BF
16MHz
Q1
IC2G$1
TXD
RXD
VREF
RS
MCP2551S08
100k
R2
120
R1
CAN termination
JP1
IC1P IC2G$2
C4
C5
C6
C3
100nF
2µ2
R4
R5
R3
1k
PWR
D2
D3
Released under the Creative Commons Attribution Share-Alike 3.0 License
http://creativecommons.org/licenses/by-sa/3.0/
Designed by Stephan Watterott (Watterott electronic)
Based on the work of Jörg Pleumann
OSHW LOGO
Logo
CANdiy-Shield_v13
nicht gespeichert!
Sheet: 1/1

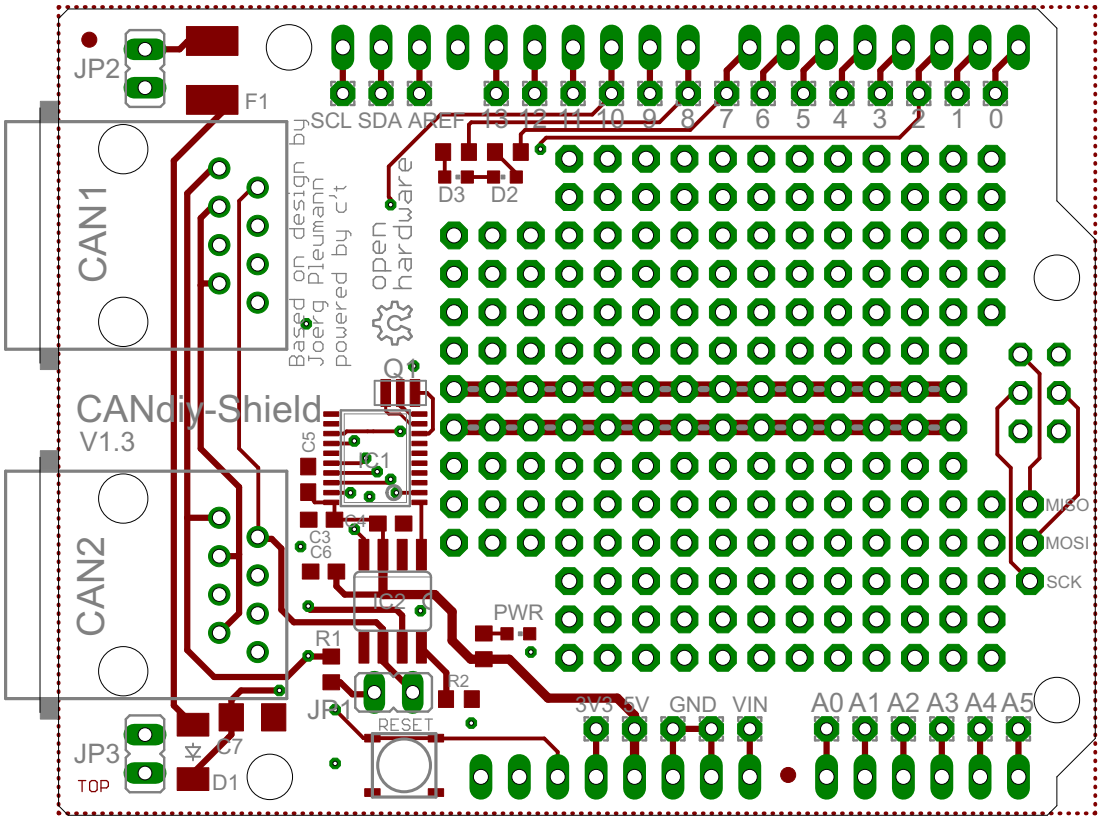
JP2
F1
SCL SDA AREF 13 12 11 10 9 8 7 6 5 4 3 2 1 0
D3 D2
CAN1
Based on design by
Joerg Pleumann
powered by c't
open
hardware
CANdiy-Shield
V1.3
C5
IC1
C3
C6
CAN2
IC2
PWR
R1
R2
JP1
RESET
MISO
MOSI
SCK
3V3 5V GND VIN
A0 A1 A2 A3 A4 A5
JP3
TOP
C7
D1