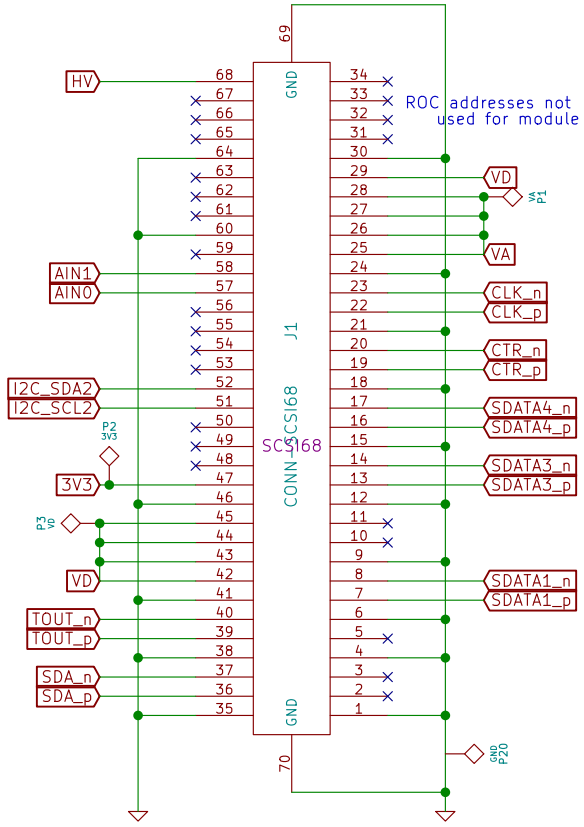

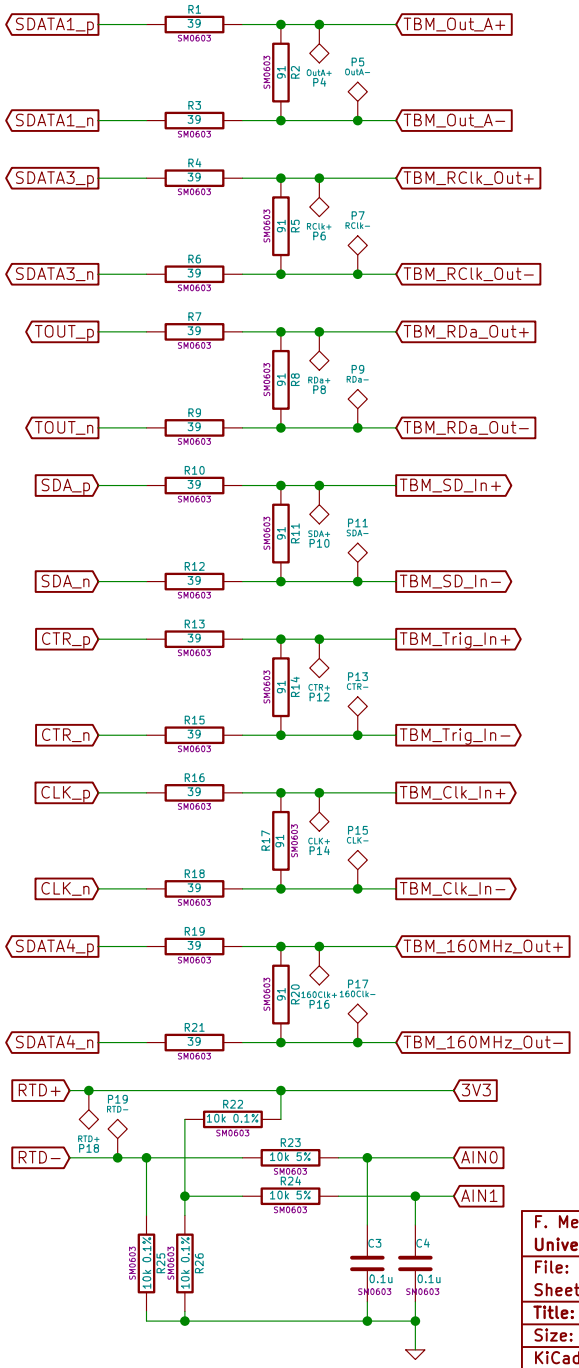

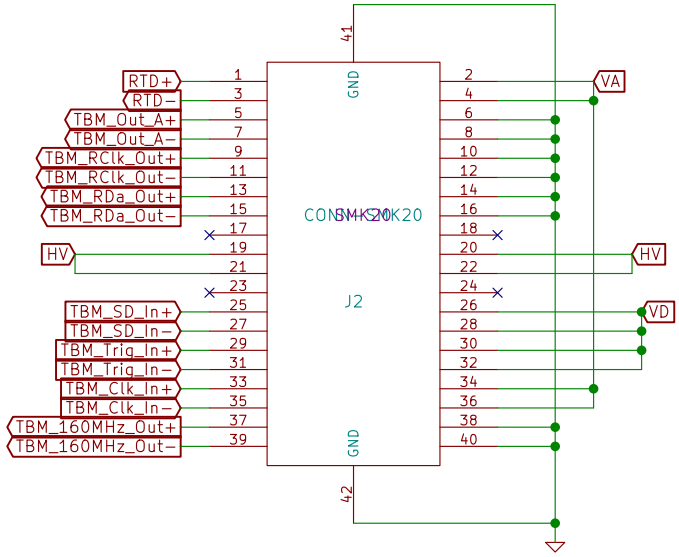

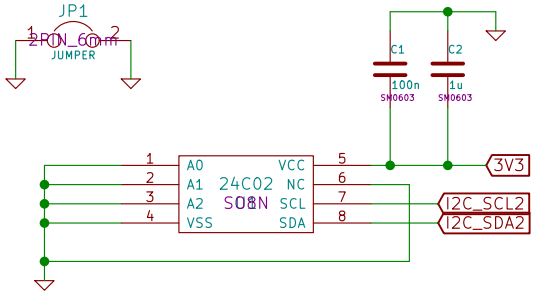

F. Meier University of Nebraska, Lincoln		
File: Sheet: /home/frank/kicad/FPix2DTB_90deg/FPix2DTB_90deg.sch		
Title: Adaptercard DTB to FPix module		
Size: A4	Date: 08 Nov 2013	Rev: 1.1
KiCad E.D.A. eeschema (2013-mar-13)-testing		Id: 1/1