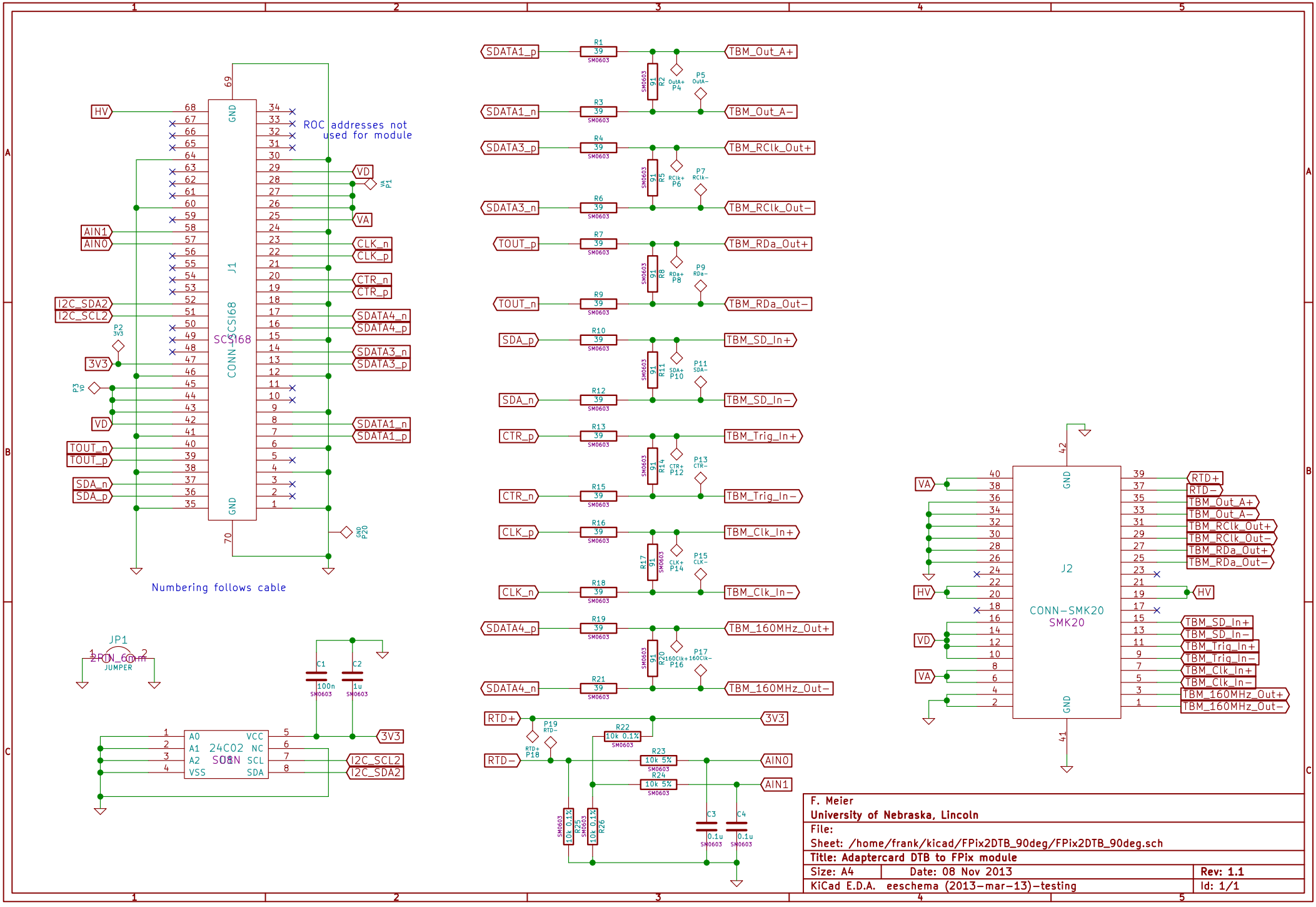
J1
CONN-SCSI68
SCSI68
ROC addresses not used for module
Numbering follows cable
HV
VD
VA
AIN1
AIN0
CLK_n
CLK_p
CTR_n
CTR_p
I2C_SDA2
I2C_SCL2
SDATA4_n
SDATA4_p
SDATA3_n
SDATA3_p
3V3
SDATA1_n
SDATA1_p
TOUT_n
TOUT_p
SDA_n
SDA_p
GND
JP1
JUMPER
C1
100n
C2
1u
24C02
SOIC
A0
A1
A2
VSS
VCC
NC
SCL
SDA
SDATA1_p
SDATA1_n
SDATA3_p
SDATA3_n
TOUT_p
TOUT_n
SDA_p
SDA_n
CTR_p
CTR_n
CLK_p
CLK_n
SDATA4_p
SDATA4_n
TBM_Out_A+
TBM_Out_A−
TBM_RClk_Out+
TBM_RClk_Out−
TBM_RDa_Out+
TBM_RDa_Out−
TBM_SD_In+
TBM_SD_In−
TBM_Trig_In+
TBM_Trig_In−
TBM_Clk_In+
TBM_Clk_In−
TBM_160MHz_Out+
TBM_160MHz_Out−
RTD+
RTD−
AIN0
AIN1
J2
CONN-SMK20
SMK20
F. Meier
University of Nebraska, Lincoln
File:
Sheet: /home/frank/kicad/FPix2DTB_90deg/FPix2DTB_90deg.sch
Title: Adaptercard DTB to FPix module
Size: A4
Date: 08 Nov 2013
Rev: 1.1
KiCad E.D.A. eeschema (2013-mar-13)-testing
Id: 1/1