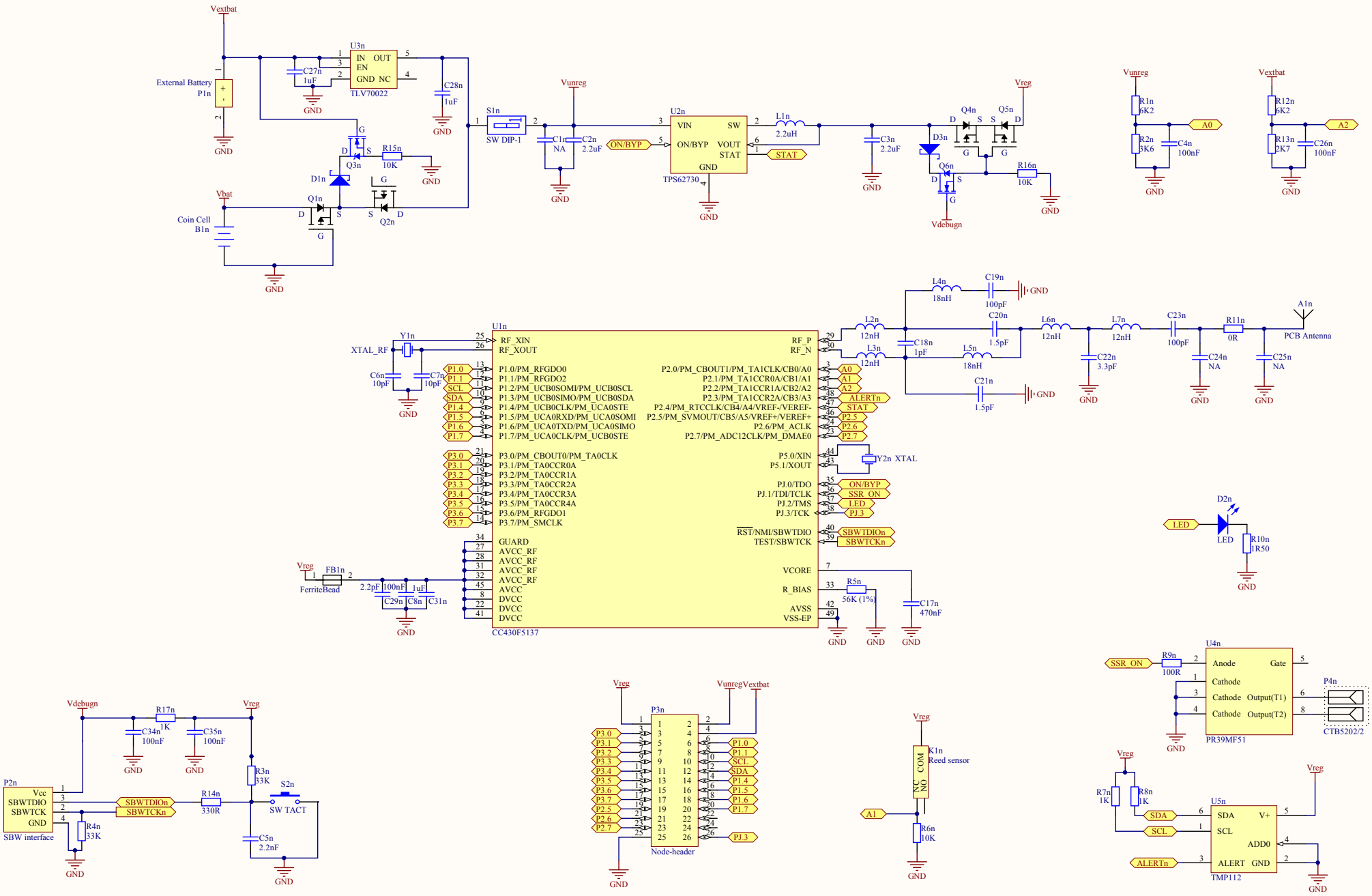

Title		
Node		
Size: A3	Number	Revision: 1.0
Date: 2013.05.19.		Sheet 2 of 2
File: D:\Altium wokrspace\..\node_sch.SchDoc		Drawn By: VB