TODO: How to control HWB to force DFU for update?
TODO: Expose UART for chaining devices.
TODO: Add pinouts for "shield" to add wireless capability?
TODO: Allow wireless shield to control multiple chained devices?
TODO: Is chaining even that valuable if you can just plug 'em all into a cheap-ass USB hub?

TODO: Other side of meter should go to GPIO pin to allow for flipping meter wiring.

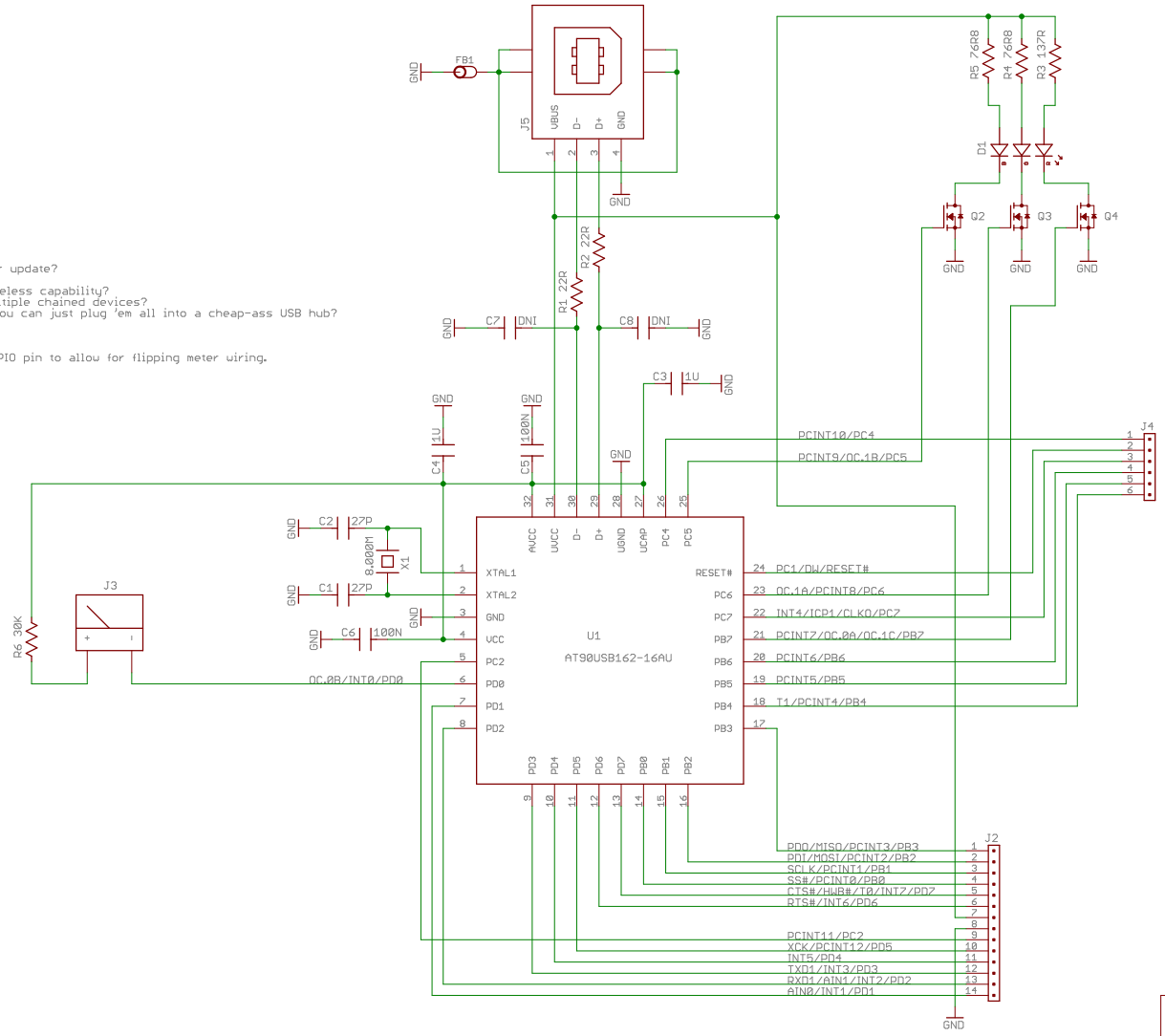


# monulator-usb-avr8

Date: not saved!

Rev: 0.4-DEV

Sheet 1/1

Copyright (C) 2011 ShareBrained Technology, Inc.

This design is licensed under a Creative Commons Attribution-ShareAlike 3.0 Unported License: http://creativecommons.org/licenses/by-sa/3.0/