TODO: How to control HWB to force DFU for update?
TODO: Expose UART for chaining devices.
TODO: Add pinouts for "shield" to add wireless capability?
TODO: Allow wireless shield to control multiple chained devices?
TODO: Is chaining even that valuable if you can just plug 'em all into a cheap-ass USB hub?

Switch to using raw 5V supply (for better LED voltage options) and separate drive circuit for meter.
Add RGB LED, just because it'd be so cool to have...
Use 3.3V regulator in AVR to supply meter drive voltage?

TODO: Other side of meter should go to GPIO pin to allow for flipping meter wiring.
8MHz crystal allows running over entire voltage range

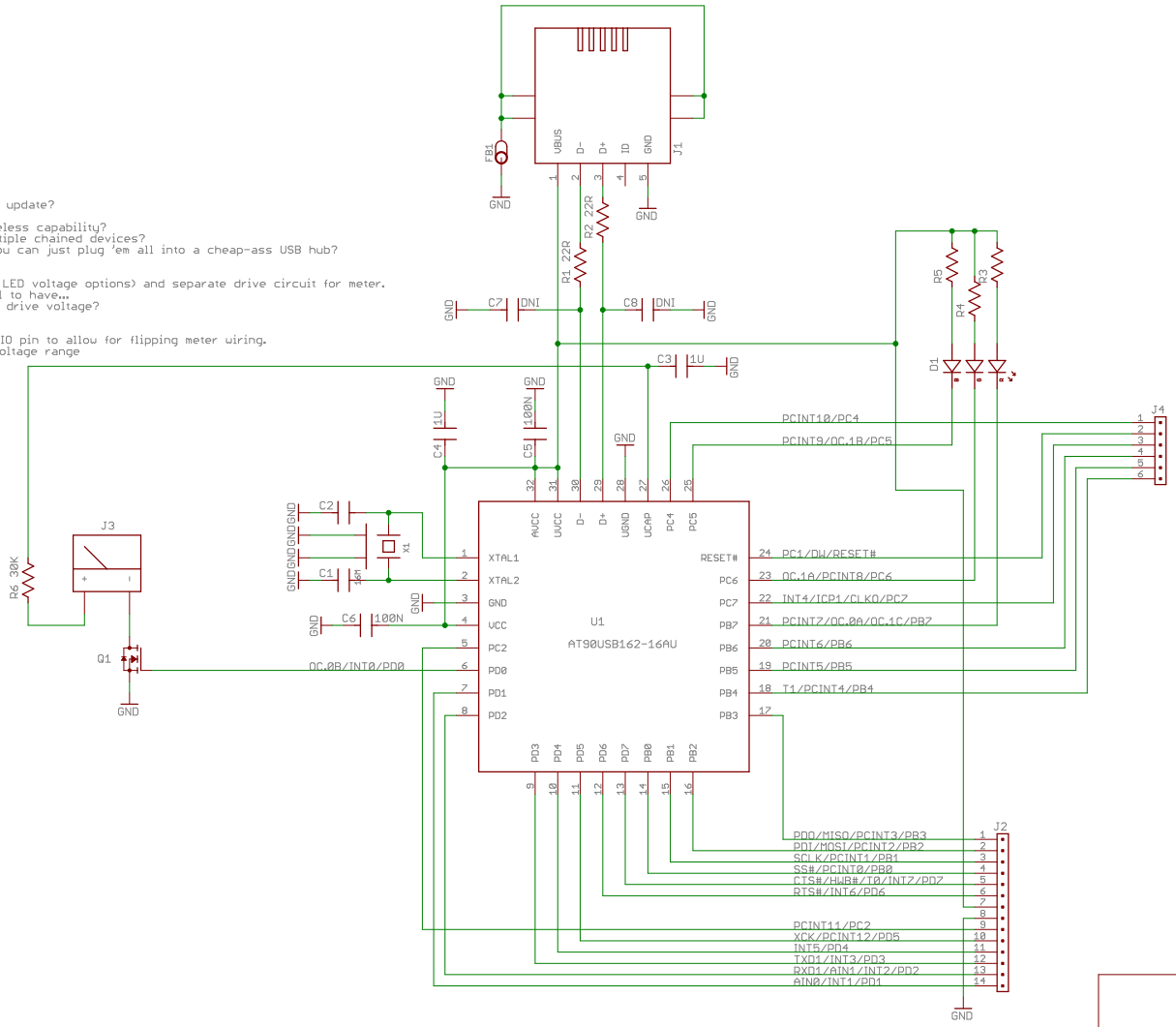

TITLE: monulator-usb-avr8	
Document Number:	REV:
Date: not saved!	Sheet: 1/1