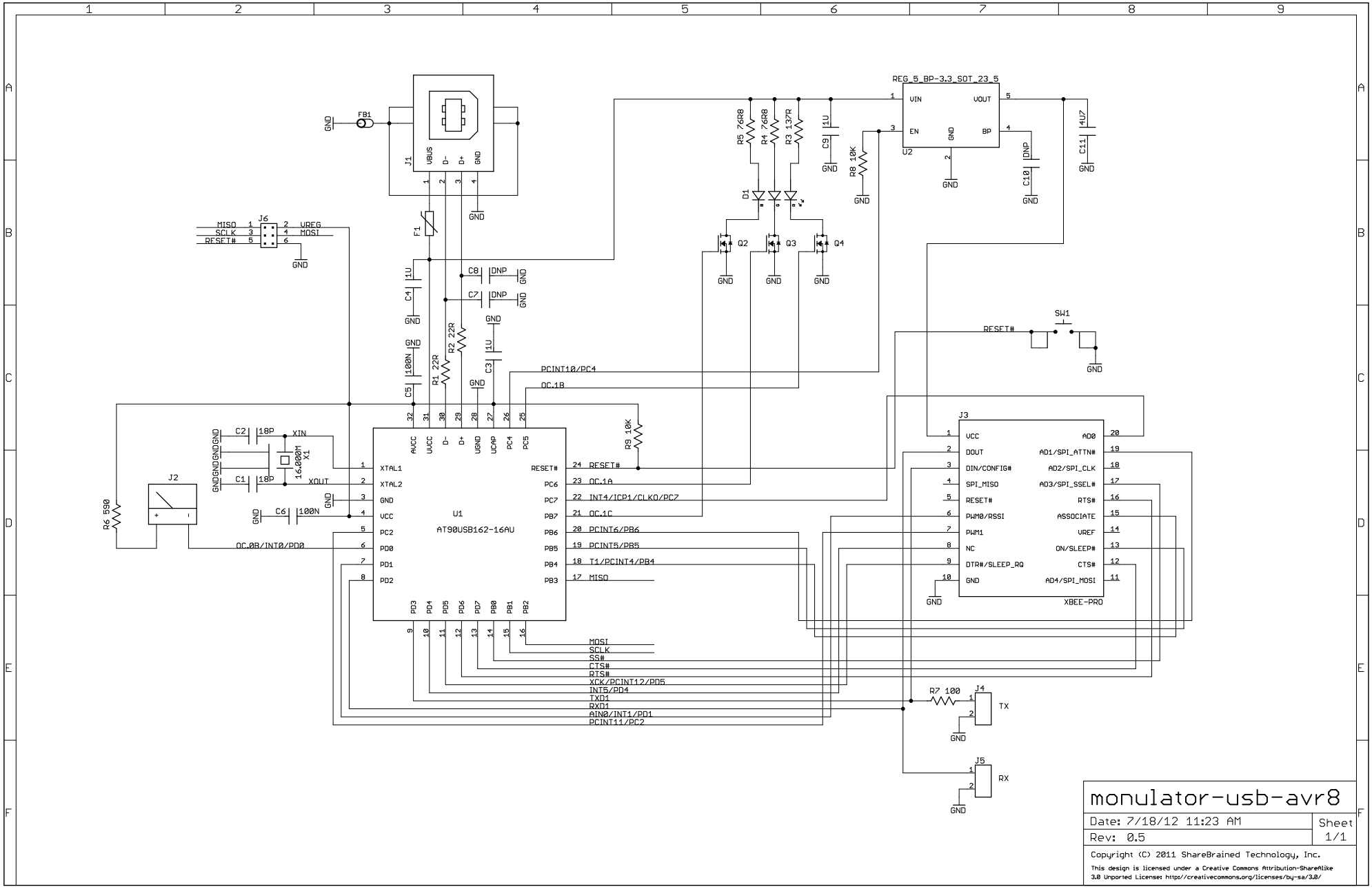

monulator-usb-avr8

Date: 7/18/12 11:23 AM

Rev: 0.5

Sheet 1/1

Copyright (C) 2011 ShareBrained Technology, Inc.

This design is licensed under a Creative Commons Attribution-ShareAlike 3.0 Unported License: http://creativecommons.org/licenses/by-sa/3.0/