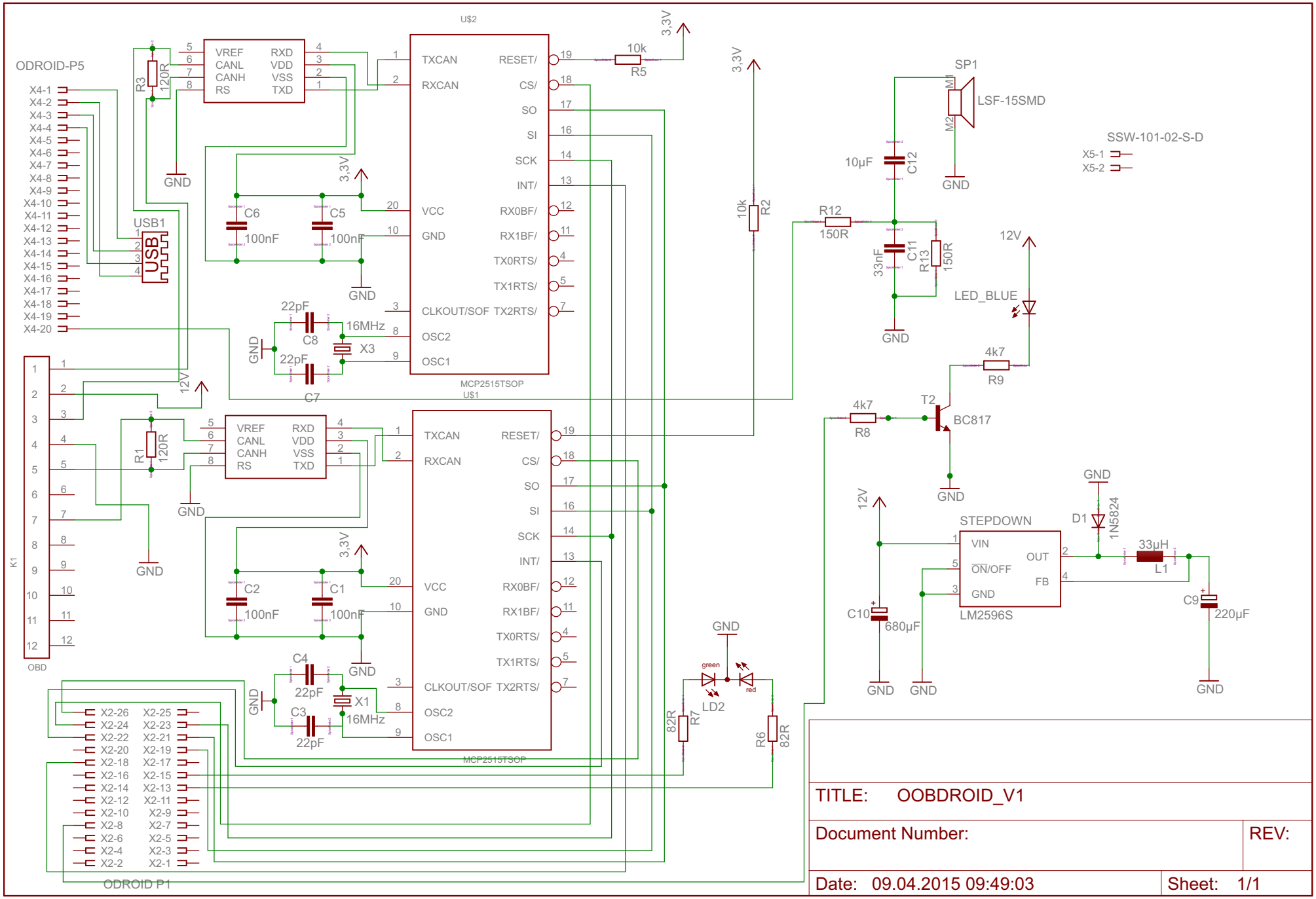

TITLE: OOBDROID_V1

Document Number:

REV:

Date: 09.04.2015 09:49:03

Sheet: 1/1