2015

# OBO BUILDING CODE

JANUARY 2015

U.S. DEPARTMENT OF STATE
BUREAU OF OVERSEAS BUILDINGS OPERATIONS

# TABLE OF CONTENTS

## OBO Supplement to 2012 INTERNATIONAL BUILDING CODE (IBC)

The *2015 OBO International Building Code Supplement* adopts the *2012 International Building Code (IBC)* and amends its provisions on a chapter-by-chapter basis. Sections listed in the chapters below are amended or added by this supplement. Where a section is not listed, provisions of the IBC section are adopted by OBO in their entirety. A number of IBC chapters are adopted in their entirety without amendment as indicated. Appendixes are adopted or amended per Subsection 101.2.1 of the IBC.

**CHAPTER 1 SCOPE AND ADMINISTRATION**
101 General
102 Applicability
103 Authority Having Jurisdiction
104 Not Adopted
105 Permits
106 Not Adopted
107 Design Submittal Standards
108 Temporary Structures And Uses
109 Not Adopted
110 Not Adopted
111 Certificate of Occupancy
112 Not Adopted
113 Not Adopted
114 Not Adopted
115 Not Adopted
116 Not Adopted

**CHAPTER 2 DEFINITIONS**
201 General
202 ICC Definitions
203 OBO Terms and Abbreviations

**CHAPTER 3 USE AND OCCUPANCY CLASSIFICATION**
303 Assembly Group A

**CHAPTER 4 SPECIAL DETAILED REQUIREMENTS BASED ON USE AND OCCUPANCY**
402 Not Adopted
408 Not Adopted
411 Not Adopted
414 Hazardous and Toxic Materials
417 Not Adopted
421 Special Fire Protection Requirements for All Occupancies
422 Physical Security Requirements for Occupancies
423 Other Security Requirements for Occupancies
424 Technical Security Requirements for Occupancies
427 Staff Housing
428 Representational Housing

**CHAPTER 5 GENERAL BUILDING HEIGHTS AND AREAS**
508 Mixed Use And Occupancy

**CHAPTER 6 TYPES OF CONSTRUCTION**
No Amendments

**CHAPTER 7 FIRE AND SMOKE PROTECTION FEATURES**
705 Exterior Walls
707 Fire Barriers
713 Shaft Enclosures

**CHAPTER 8 INTERIOR FINISHES**
803 Wall And Ceiling Finishes
804 Interior Floor Finish
808 Acoustical Ceiling Systems
810 Furniture

**CHAPTER 9 FIRE PROTECTION SYSTEMS**
901 General

**CHAPTER 10 MEANS OF EGRESS**
1008 Doors, Gates And Turnstiles
1011 Exit Signs
1022 Interior Exit Stairways And Ramps
1029 Emergency Escape and Rescue

**CHAPTER 11 ACCESSIBILITY**
1101 General

**CHAPTER 12 INTERIOR ENVIRONMENT**
1204 Temperature Control
1205 Lighting
1207 Sound Transmission

**CHAPTER 13 ENERGY EFFICIENCY**
1301 General

**CHAPTER 14 EXTERIOR WALLS**
1401 General
1403 Performance Requirements
1408 Exterior Insulation and Finish Systems (EIFS)

**CHAPTER 15 ROOF ASSEMBLIES AND ROOFTOP STRUCTURES**
1503 Weather Protection
1507 Requirements for Roof Coverings
1510 Reroofing of Existing Buildings and Roofing for Additions

**CHAPTER 16 STRUCTURAL DESIGN**
1601 General
1604 General Design Requirements
1607 Live Loads
1608 Snow Loads
1609 Wind Loads
1610 Soil Lateral Loads
1613 Earthquake Loads
1616 Configuration Irregularities
1616 Seismic Design Requirements For Nonstructural Components
1617 Seismic Design Requirements For Seismically Isolated Structures
1618 Blast Analysis And Design

**CHAPTER 17 STRUCTURAL TESTS AND SPECIAL INSPECTIONS**
No Amendments

**CHAPTER 18 SOILS AND FOUNDATIONS**
1801 General
1803 Geotechnical Investigations
1805 Damproofing and Waterproofing
1808 Foundations
1810 Deep Foundations

**CHAPTER 19 CONCRETE**
1901 General
1903 Specifications for Tests and Materials
1904 Durability Requirements
1905 Modifications to ACI 318-11
1907 Minimum Slab Provisions
1913 Concrete Quality, Mixing and Placing
1914 Details of Reinforcement
1915 Joint Requirements

**CHAPTER 20 ALUMINUM**
No Amendments

**CHAPTER 21 MASONRY**
No Amendments

**CHAPTER 22 STEEL**
2201 General
2205 Structural Steel
2209 Cold-Formed Steel

**CHAPTER 23 WOOD**
No Amendments

**CHAPTER 24 GLASS AND GLAZING**
2405 Sloped Glazing and Skylights
2410 Blast Resistance Requirements

**CHAPTER 25 GYPSUM BOARD AND PLASTER**
No Amendments

**CHAPTER 26 PLASTIC**
No Amendments

**CHAPTER 27 ELECTRICAL**
2702 Emergency and Standby Power Systems

**CHAPTER 28 MECHANICAL SYSTEMS**
No Amendments

**CHAPTER 29 PLUMBING SYSTEMS**
2902 Minimum Plumbing Facilities

**CHAPTER 30 ELEVATORS AND CONVEYING SYSTEMS**
3001 General
3002 Hoistway Enclosures
3003 Emergency Operations

**CHAPTER 31 SPECIAL CONSTRUCTION**
3107 Signs
3109 Swimming Pool Enclosures and Safety Devices
3115 Non-Permanent Facilities

**CHAPTER 32 ENCROACHMENTS INTO THE PUBLIC RIGHT-OF-WAY**
No Amendments

**CHAPTER 33 SAFEGUARDS DURING CONSTRUCTION**
No Amendments

**CHAPTER 34 EXISTING BUILDINGS AND STRUCTURES**
3411 Accessibility For Existing Structures
3420 Physical Security For Existing Buildings

**CHAPTER 35 REFERENCED STANDARDS**
Additional Standards Referenced by OBO

**APPENDIX A** Not Adopted

**APPENDIX B** Not Adopted

**APPENDIX C** Not Adopted

**APPENDIX D** Not Adopted

**APPENDIX E** Not Adopted

**APPENDIX F** **RODENT PROOFING**
No Amendments

**APPENDIX G** **FLOOD-RESISTANT CONSTRUCTION**
No Amendments

**APPENDIX H** **SIGNS**
No Amendments

**APPENDIX I** **PATIO COVERS**
No Amendments

**APPENDIX J** **GRADING**
J103 Not Adopted
J104 Not Adopted
J105 Not Adopted
J106 Excavations
J107 Fill
J110 Erosion Control

**APPENDIX K** Not Adopted

**APPENDIX L** **EARTHQUAKE RECORDING INSTRUMENTATION**
No Amendments

**APPENDIX M** **TSUNAMI-GENERATED FLOOD HAZARD**
No Amendments

**APPENDIX N** **SECURITY DETAILS FOR BUILDING CONSTRUCTION**

**END OF IBC TABLE OF CONTENTS**

# CHAPTER 1
# SCOPE AND ADMINISTRATION

## SECTION 101
## GENERAL

**Replace Section 101.1 with the following:**

**101.1 Title.** The *2015 OBO Building Code*, herein referred to as "this code", adopts the *2012 International Building Code* (IBC) as amended by the 2015 OBO International Codes Supplements (OBO-ICS).

**101.1.1** The International Code Council Supplements to the International Codes are not adopted by OBO.

**Replace Subsection 101.2 in its entirety with the following:**

**101.2 Scope.** The provisions of this code, shall apply to the construction, alteration, movement, enlargement, replacement, repair, equipment, use and occupancy, location, maintenance, removal and demolition of every building or structure or any appurtenances connected or attached to such buildings or structures.

**101.2.1** The provisions of this code shall apply to all Marine Security Guard Quarters (MSGQs).

**101.2.2**. The provisions of this code shall apply to on-compound staff housing greater than three stories in height.

**101.2.3** The provisions of this code shall apply to on-compound and off-compound representational housing in accordance with Section 428.

**101.2.4** The provisions of this code shall apply to all high-rise housing in accordance with Section 403.

**101.2.5** Detached one- and two-family staff dwellings and multiple single family staff dwellings (townhouses) not subject to blast requirements and not more than three stories above grade plane in height with a separate means of egress and their accessory structures shall comply with the *OBO Residential Code*.

> **Exception.** The provisions of this code shall apply to on-compound staff housing in accordance with Section 427.

**101.2.6 Appendixes** Provisions in the appendices shall not apply unless specifically adopted. The OBO-ICS "Table of Contents" for each code indicates which ICC I-Code Appendixes are adopted by OBO.

**Replace Subsection 101.4 with the following:**

**101.4 Referenced codes.** The other codes listed in Sections 101.4.1 and 101.4.2, and referenced elsewhere in this code shall be considered part of the requirements of this code to the prescribed of each such reference

**101.4.1 Codes adopted and amended by OBO.**

**101.4.1.1 OBO Fire Code.** Provisions of the *International Fire Code* (IFC) are adopted as amended by the OBO International Fire Code Supplement (OBO-ICS IFC).

**101.4.1.2 OBO Mechanical Code.** Provisions of the *International Mechanical Code* (IMC) are adopted as amended by the OBO International Mechanical Code Supplement (OBO-ICS IMC).

**101.4.1.3** **OBO Plumbing Code.** Provisions of the *International Plumbing Code* (IPC) are adopted as amended by the OBO International Plumbing Code Supplement (OBO-ICS IPC).

**101.4.1.4** **OBO Residential Code.** Provisions of the *International Residential Code* (IRC) are adopted as amended by the OBO International Residential Code Supplement (OBO-ICS IRC).

**101.4.1.5** **OBO Zoning Code.** Provisions of the *International Zoning Code* (IZC) are adopted as amended by the OBO International Zoning Code Supplement (OBO-ICS IZC).

**101.4.1.6** **OBO Swimming Pool And Spa Code.** Provisions of the *International Swimming Pool And Spa Code (ISPSC))* are adopted as amended by the OBO International Swimming Pool And Spa Code Supplement (OBO-ICS ISPSC).

**101.4.1.7** **OBO Electrical Code.** Provisions of the *2014 National Electrical Code (NEC)* are adopted as amended by the OBO National Electrical Code Supplement (OBO-ICS NEC).

**101.4.1.6.1**. NFPA supplements to the NEC are not adopted by OBO.

**101.4.2 Codes adopted without amendment by OBO.**

**101.4.2.1** **OBO Fuel Gas Code.** Provisions of the *International Fuel Gas Code* (IFGC) are adopted.

**101.4.2.2** **OBO Private Sewage Disposal Code.** Provisions of the *International Private Sewage Disposal Code* (IPSDC) are adopted.

**101.4.3 Codes not adopted by OBO.**

**101.4.3.1** Provisions of the *International Electrical Code* (IEC) are not adopted.

**101.4.3.2** Provisions of the *International Energy Conservation Code* (IECC) are not adopted.

**101.4.3.3** Provisions of the *International Existing Building Code* (IEBC) are not adopted

**101.4.3.4** Provisions of the *International* Property Maintenance *Code* (IPMC) are not adopted.

**101.5 Effective Date of the *OBO Building Code*.** *The 2015 OBO Building Code* is effective January 1, *2015*.

**101.6 Host Country Codes and Standards.** Latest editions and supplements of the Host Country's local building codes, including zoning requirements and product standards, as of the contract date are also applicable to the building project. In cases where the Host Country's codes and standards are more stringent, the contractor shall submit an RFI to the COR for resolution.

**101.7 Marginal Markings Indicating Updates.** Solid vertical lines in the margins within the body of the supplement indicate a change or an addition from the technical requirements of the previous edition of the OBO Code. Deletion of requirements is indicated by arrows in the margins. OBO-ICS supplements to the codes cited in Section 101.4 are marked accordingly. Examples of these markings are as follows:

Change or Addition: " ▌ "

Deletion: " ⇦ "

SECTION 102
**APPLICABILITY**

**Replace Section 102.6 with the following:**

**102.6 Existing Structures.** The occupancy of any structure existing on the date of adoption of this code shall be permitted to continue without change, except as specifically covered in this code and the *OBO Fire Code*, or as is deemed necessary by the Authority Having Jurisdiction (AHJ) for the general safety and welfare of the occupants and the public.

**Delete Section 103 in its entirety and replace with the following:**

SECTION 103
**AUTHORITY HAVING JURISDICTION**

**103.1 Creation of Enforcement Office.** The OBO Office of Design and Engineering (OBO/PDCS/DE) shall be the "Authority Having Jurisdiction" (AHJ).

**103.2 Appointment.** The Office Director of the OBO Office of Design and Engineering shall appoint building officials deemed necessary for enforcement of this code.

**103.3 USAID managed property.** USAID's Overseas Management Support Office in the Bureau for Management, USAID/Washington (USAID/W - M/OMS) shall be the Authority Having Jurisdiction for USAID-managed property only.

**Section 104 is not adopted.**

**Delete Section 105 in its entirety, and replace with the following:**

SECTION 105
**PERMITS**

**105.1 Required.** Post or proponent must make application to the Authorities Having Jurisdiction and obtain the required permit for the types of post actions listed below that involve U.S. Government-owned/long-term leased (GO/LTL) real property, regardless of cost or funding source.

**105.1.1 Types of projects requiring the issuance of a permit.** Post or proponent shall obtain a permit prior to commencement of any construction work for the following types of projects:

1. Demolition of structures or other facilities;
2. Interior alterations affecting representational spaces, public spaces or materially affecting space functions or design;
3. New, relocated or substantially altered driveways, walls, parking areas, landscaping or other exterior works;
4. Replacement of, or alterations to, roof, roof structure, including placement or erection of any structures, equipment, or devices on the roof;
5. Construction of any facility or placement of any heavy equipment on roofs or on balconies;

6. Removal, replacement, or alteration of structural support members, (e.g., beams, trusses, columns, and load-bearing walls, including cutting new openings in load-bearing walls);
7. Excavation below, or adjacent to, existing buildings and wall foundations; and
8. Repairs due to structural failures, except temporary emergency repairs.
9. Fire detection and suppression systems
10. ICAAS and Tenant Funded Projects
11. Gifted/Donated and Other Projects
12. Projects by other Bureaus
13. Non-Permanent Facilities in accordance with Section 3115.

**Exception.** Projects that are managed by posts, which are simple in nature and are estimated to cost less than $50,000.

**105.2 Validity of permit.** The issuance or granting of a permit shall not be construed to be a permit for, or an approval of, any violation of any of the provisions of this code or any other ordinance of the jurisdiction. Permits presuming to gibe authority to violate or cancel the provisions of this code or other ordinances of this jurisdiction shall not be valid. The issuance of a permit based upon construction documants and other data shall not prevent the building official from requiring the correction of errors in the construction documents and other data. The building official is also authorized to prevent occupancy or use of a structure where in violation of this code or of any other ordinances of this jurisdiction.

**105.2.1 Condition upon permit.** The issuance or granting of a permit shall not be construed to allow any portion of the cost of the project to be claimed as an offset to Payments under either the Capital Security Cost Sharing Program OR the Maintenance Cost Sharing Program.

**Section 106 is not adopted.**

**Replace the title of Section 107 with the following:**

SECTION 107
**DESIGN SUBMITTAL STANDARDS**

**Replace section 107 in its entirety with the following:**

**107.1 Standard Submittal Requirements.** Design submittals shall be provided in accordance with the documentation requirements of OBO Design Standards - Section Design Submittal Standards.

**107.2 Metrication.** The design documentation shall be developed using the metric system of measurement and in accordance with the metric standards of OBO Design Standards - Section Design Submittal Standards - Metrication.

**107.3 Code Analysis:** Provide code analysis of the applicable requirements of this code and host country code(s) for all proposed facilities. Content of analysis shall be consistent with the International Code Council - Plan Review Record.

**Exception.** Other code analysis forms may be used if approved in advance by the by contracting officer.

**107.4 Professional Seals and Signatures.** Affix proper seals and signatures by registered design professional(s), for design phases identified in OBO Design Standards Section Design Submittal Standards, in accordance with the following:

**107.4.1**. A registered design professional shall sign and seal each drawing, specification cover sheet(s), report cover sheet(s), or other documents that are required to be signed and sealed only if the following requirements are met:

**107.4.1.1**. The design professionals shall possess valid, current, professional registration issued in the United States or host country.

**107.4.1.2**. The registered design professional is competent in the subject matter of those documents by virtue of education or experience, or both;

**107.4.1.3**. The registered design professional has served in one of the following roles in the project:

1) Personally prepared the documents: had direct technical knowledge and responsible control over the content of technical submissions during their preparation;

2) Approved the documents: performed substantive review and authority to make revisions with regard to the preparation of submissions.

## SECTION 108
## TEMPORARY STRUCTURES AND USES

**Delete Section 108 in its entirety, and replace with the following:**

**108.1 Required.** Posts must make application to the Authorities Having Jurisdiction and obtain the required permit for temporary structures, regardless of cost or funding source. Such permits shall be limited as to time of service, but shall not be permitted for more than 180 days.

**108.1.1 Non-permanent facilities..** Refer to Section 3115 for provisions related to non-permanent facilities.

**108.1.1 Authorities Having Jurisdiction.**

1. The Bureau of Overseas Buildings Operations (OBO/PDCS/DE).
2. USAID's Overseas Management Support Office in the Bureau for Management, USAID/Washington (USAID/W - M/OMS)

**Sections 109 through 110 are not adopted**.

## SECTION 111
## CERTIFICATE OF OCCUPANCY

**Delete Section 111 in its entirety, and replace with the following:**

**111.1 Use and occupancy.** No building or structure shall be used or occupied, and no change in the existing occupancy classification of a building or structure or portion thereof shall be made until the authority having jurisdiction has issued a certificate of occupancy therefor as provided herein. Issuance of a certificate of occupancy shall not be construed as an approval of a violation of the provisions of this code or other conditions of the contract.

**Exception.** Certificates of occupancy are not required for work exempt from permits under Section 105.

**111.2 Certificate issued.** OBO/PDCS/DE/DC will issue a certificate of occupancy after the following items are received:

1. Upon completion of construction, the Project Director or occupying office shall provide attestation to OBO/PDCS.DE/DC that the project was completed in accordance with the permitted documents.
2. Provide one set of hardcopy and one set of electronic as-built documents to OBO/PDCS/DE/DC.

**111.3 Temporary occupancy.** The authority having jurisdiction is authorized to issue a temporary certificate of occupancy before completion of the entire work covered by the permit, provided that such portion or portions shall be occupied safely. The authority having jurisdiction shall set a time period during which the temporary certificate of occupancy is valid.

**111.4 Revocation.** The authority having jurisdiction is authorized to, in writing, suspend or revoke a certificate of occupancy or completion issued under the provisions of this code wherever the certificate is issued in error, or on the basis of incorrect information supplied, or portion thereof is in violation of any ordinance or regulation or any of the provisions of this code.

**Sections 112 through 116 are not adopted**.

**END OF CHAPTER IBC-1 AMENDMENTS**

# CHAPTER 2
# DEFINITIONS

## SECTION 201
## GENERAL

**Delete this section in its entirety and replace with the following:**

**201.1 Scope**. Unless otherwise expressly stated, the following words and terms shall, for the purposes of this code, have the meanings shown in this chapter.

**201.2 Terms defined in other codes**. Where terms are not defined in this code and are defined in the codes adopted by OBO or on the OBO Design Standards,, such terms shall have the meanings ascribed to them as in those codes.

**201.3 Terms not defined**. Where terms are not defined through the methods authorized by this chapter, such terms shall have ordinarily accepted meanings such as the context implies.

## SECTION 202
## ICC DEFINITIONS

**Replace definition with the following:**

**HISTORIC BUILDINGS.** See "Culturally Significant Buildings" in Section 203.

## SECTION 203
## OBO TERMS AND ABBREVIATIONS

**ACCESS CONTROL.** Control of entry by means of physical barriers, devices and/or inspection procedures.

**ACCESS DENIAL SYSTEM.** A nonlethal crowd control measure intended to protect a facility against riots or disturbances by causing the mob to disperse or become incapacitated. DOS usually employs electronically-fired tear gas grenades for this purpose, although aqueous foam generators have also been used.

**ACCESSIBLE.** (1) A site, building, facility, or portion thereof that complies with the requirements of the Architectural Barriers Act (ABA) for accessibility to sites, facilities, buildings and elements by individuals with disabilities. (2) Referring to building exterior walls and windows, anything located 5.00 m or less above grade or accessible platform.

**ACCESSIBLE PLATFORM.** Referring to exterior walls, any platform (common roofs and walls, trees and ledges, etc.) located within 5.00 m above grade level, within 2.75 m from exterior wall and 2.75 m horizontal distance from the perimeter wall.: *also* – Referring to exterior walls, any platform (common roofs and walls, trees, and ledges, etc.) located within 5.00 m above grade level, within 2.75 m from exterior wall and 2.75 m horizontal distance from the perimeter wall.

**ACCESSIBLE WINDOWS/OPENINGS.** All ground and higher floor windows/openings (includes vents, sidelights, air conditioners, etc.) easily reached from outside (generally, without the use of ladders, rope or other climbing aid) and greater than 625 $cm^2$ (96 square inches).

**ADJACENT AREA AND CONTIGUOUS SPACE.** Space surrounding Controlled Access Area(s) (CAA) besides/below/above; includes adjoining spaces extending beyond external walls/floor/ceiling of CAA through such spaces to next set of walls/floors/ceilings of building.

**ADMINISTRATIVELY CONTROLLED AREA.** An area into which unescorted access is limited to authorized personnel, either foreign national or American. Examples of such areas include:

1. Cashier booths
2. Unclassified computer rooms
3. Unclassified mail rooms
4. Health unit
5. Consular section (restricted files, equipment, supplies, and storage)

**AHJ.** See Authority Having Jurisdiction.

**ANTI-CLIMB:** Description of a wall or fence, at least 2.75 m in height, without handholds or footholds.

**ANTI-RAM**: Description of a barrier meeting the specification for anti-ram, SD-STD-02.01; sufficient, at the maximum threat, to arrest a 6800 kg (15,000 lb.) gross-weight vehicle traveling at a maximum of 80 kilometers per hour (50 mph) perpendicular to the barrier.

**ARSO:** Assistant RSO.

**ASE.** Acoustic Shielded Enclosure. See also 'Certified Shielded Enclosure'.

**ATTACK SIDE.** Public (or exposed) side of a perimeter barrier, hardline wall, door, or window. For vehicle barriers, the direction of approach for uninspected vehicles. See "protected side."

**AUTHORITY HAVING JURISDICTION:** (1) The governmental agency which regulates the construction process. (2) For Department of State projects, the Office of Design and Engineering (OBO/PDCS/DE) in the OBO Program Development, Coordination, and Support Directorate, is the Authority Having Jurisdiction.

**BALLISTIC RESISTANCE.** Products and designs certified by DS/PSP/PSD under the provisions of SD-STD-01.01 (see *12 FAH-5* H-011, subparagraph (4)) to withstand a minimum of 7.62/5.56 mm rifle rounds fired from approximately 6.00 m without penetration of spalling.

**BCR.** Built-in Conference Room.

**BOLLARD.** Concrete-filled steel pipes used to channel or restrict vehicular traffic.

**BR.** Ballistic Resistance or Ballistic-Resistant (formerly HPR).

**CAA.** Controlled Access Area.

**CAC**. Compound Access Control. Also referred to as "Campus Access Pavilion (CAP)

**CAG**. Cleared American Guard.

**CAP** – Campus Access Pavilion Also referred to as "Compound Access Control (CAC)

**CDS.** Chemical Dispensing System.

**CES.** Compound Emergency Sanctuary.

**CHEMICAL DISPENSING SYSTEM.** A means of remotely activated deployment of tear gas in grenade form or by electronically activated fixed canisters

**CIHS/PDS**. Classified Information Handling System. See Protected Distribution System.

**CIPE**. Classified Information Processing Equipment.

**CLAN.** Classified Local Area Network.

**CLEAR ZONE.** On NEC compounds, a 6 m (20 ft.) area, extending inward from the protected side of the perimeter barrier, which is free of any auxiliary structures, parking areas, or other man-made features.

**CLEARED AMERICAN ESCORT (CAE)** Locally Employed, Cleared U.S. Citizen who has been provided suitable training in relevant construction surveillance procedures, as provided in the CST Field Manual and other written instructions, by qualified security personnel (Site Security Manager (SSM), Construction Surveillance Technician (CST), Security Engineering Officer (SEO), or the Regional Security Officer (RSO)).

**CLEARED AMERICAN GUARD (CAG).** Cleared U.S. citizen (Top Secret), who is selected, professionally trained, and assigned to Project for purpose of protecting security integrity of Site, building, materials, furniture, fixtures, equipment and other items scheduled for inclusion in controlled access area(s) (CAA).

**CLEARED U.S. CITIZEN.** U.S. citizen possessing current validated security clearance (minimum SECRET) as required by DOD Form 154 Contract Document, and authorized by the Project Director/COR to be at the Final Construction Site, Support Site, and any Secure Storage Area (SSA). **CMP**. Compound. Also referred to as Campus.

**CMR.** Chief of Mission's Residence (replaces EMR which may still be found in some DOS documents). The official, private residence of the United States Ambassador and family in a foreign country.

**COMMON USE MATERIALS.** Construction materials used throughout the building without regard to specific locations. Examples include reinforcing steel (rebar), wallboard, light fixtures, carpet tile, ceiling tiles and wire conduit. These materials shall be used in CAA and non-CAA areas. Specifically excluded are materials that will only be used in the CAA.

**COMMON WALL.** A wall, floor, ceiling, or other physical barrier separating USG-controlled spaces from adjoining non-USG-controlled spaces.

**COMPOUND ACCESS CONTROL (CAC).** System of gates, barriers, and guard booths, used to pre-screen personnel and vehicles entering a secure perimeter.

**COMPOUND EMERGENCY SANCTUARY (CES).** A protected building or room designated as a temporary shelter during an attack or other crisis for personnel unable to reach or be accommodated in a safe haven, safe area or 15-minute FE/BR protected building.

**COMPROMISE.** Unauthorized disclosure of classified information, or unauthorized access to secured products/materials/equipment.

**CONSEC.** Construction surveillance procedures.

**CONSTRUCTION SECURITY PLAN (CSP).** Project specific security plan developed by the USG to ensure that construction activities are undertaken in manner consistent with applicable USG regulations, policies, procedures, and standards. The CSP is the standard operating procedure (SOP) for the Project and is the working document intended as primary procedural guidance for the Project Director/COR and the Site Security Manager.

**CONSTRUCTION SURVEILLANCE TECHNICIAN (CST).** Cleared U.S. Citizen (TOP SECRET), experienced in related construction technology and professionally trained in USG surveillance techniques, who is assigned to the Project to ensure security integrity of Project Site, building, controlled access area(s) (CAA), and materials scheduled for inclusion in the CAA.

**CONTROLLED.** The state of being directly protected by 24-hour presence of Cleared American Personnel, or being under protection of technical devices approved and installed by Bureau of Diplomatic Security (DS).

**CONTROLLED ACCESS AREA (CAA).** The only area(s) within a building where classified information or materials may be handled, stored, discussed, or processed. All unauthorized personnel must be under constant escort and observation. There are two categories of CAAs: core and restricted.

**CONTROLLED AREA.** An area where an individual has passed one or more inspection points in order to gain entry, but in which no national security information is processed. This area must be behind the building hardline.

**CORE AREA.** Those areas of the CAA where unescorted access is limited to authorized U.S. citizens holding a TOP SECRET clearance. Authorized U.S. Citizens with a SECRET clearance may have access to core areas, but must be under constant escort and observation. Certain areas also require special access authorization.

**CSE.** Certified Shielded Enclosure.

**CSP.** Construction Security Plan.

**CST.** Construction Surveillance Technician.

**CTF.** Common Transmission Facility.

**DEAL TRAY.** The subassembly of a transaction window which enables routine passage of materials of limited size between sides of the window. The window may be fixed, have a convoluted design, or include moveable elements to enhance security.

**DISINTEGRATOR.** A DOS-approved machine for destruction of material into a powder-like form which affords more secure destruction than a shredder.

**DS.** Diplomatic Security, Bureau of.

**DS-APPROVED NONMAN-PASSABLE.** A system that has been tested to meet 5-minute forced entry (FE) barrier system protection requirements by a single attacker using improvised tools available within the public access area behind the hardline and certified in accordance with Department of State certification standard, SD-STD-01.04, Revision B. This terminology is to distinguish from the 5-minute FE protection provided at building exteriors and interior hardlines in which the test criteria simulates a mob.

**ESCAPE HATCH.** A horizontally or vertically mounted non-door assembly.

**FE.** Forced Entry.

**FE/BR.** Forced Entry/Ballistic Resistant.

**Flying Fragments.** Fragments generated by the destruction of "unhardened" (not blast-resistant) features such as perimeter walls, adjacent structures, sunscreens, veneers, ornament, exposed mechanical, electrical equipment, etc.

**GENERAL WORK AREA (GWA).** Areas of building in which access by the public is restricted: *also* - Work space occupied by U.S. citizen and Locally Employed Staff (LES) personnel in which Sensitive But Unclassified (SBU) information may be handled, stored, discussed, or processed. Examples include administrative and consular offices. .

**GRADE LEVEL.** Highest level of ground within 2.75 m.

**HARDLINE.** Term referring to a system of barriers surrounding a protected area which afford degrees of forced entry, ballistic resistant, or blast protection, or combinations of these three. A hardline may include walls, floors, ceilings, roofs, windows, doors, or non-window openings, all of which must provide the level of protection specified for that hardline.

**HAZARD.** Potential interaction between people, equipment, material, or environment which could result in damage to property or equipment, disruption of mission, contamination of environment, or substantial personal injury resulting in time loss.

**HHMD.** Hand-Held Metal Detector.

**IDS.** Intrusion Detection System.

**IMPACT STATEMENT.** An analysis and program for the security systems for a particular Post provided by the Department.

**INSPECTABLE MATERIAL.** Materials that can be inspected through means approved by Bureau of Diplomatic Security (DS) or Security Management Division (OBO/PE/SM). Examples include sections of single wall ductwork, sheets of gypsum board, pieces of wood, and non-electrical fixtures.

**LIMITED ACCESS AREA.** An area of U.S. control between the CAA and the general work areas. See Section 422.2.10.3 Areas of Control.

**LOCK AND LEAVE FACILITY.** A Department of State overseas office facility officially certified and designated as a (classified or unclassified) facility without 24-hour cleared U.S. presence.

**MAN-PASSABLE**. An opening having the minimum area required for an intruder to physically pass through a barrier and enter a secured area. In accordance with DS/PSP/PSD specifications (SD-STD-01.01), the minimum area considered passable is 625 $cm^2$ (96 square inches) with its smallest dimension equal to, or larger than, 150 mm. *also* - Under the provisions of DS Certification Standard – SD-STD-01.01, the minimum area considered passable is 625 $cm^2$ with its smallest dimension equal to, or larger than, 150 mm. Nominal dimensions are as follows: Square Opening: 250 mm x 250 mm; Rectangular Opening: 150 mm by 400 mm; Circular Opening: 300 mm.

**MAXIMUM DEMOLITION.** As applied to the CAA, the removal of all finish work material down to the elements or materials defined as "general construction." This includes overhead ceiling material, wall and ceiling plaster, gypsum board, flooring, doors/frames, electrical wiring, light fixtures, electrical switches, receptacles, telephone wiring, conduit, window/frames and heat radiators.

**MSG.** Marine Security Guard.

**MSG-1.** See Post One.

**MSGQ.** Marine Security Guard Quarters. Also referred to as Marine Security Guard Residence (MSGR).

**NCOIC.** Non-Commissioned Officer in Charge of the Marine detachment at a Post; Senior Marine at a Post, see Detachment Commander.

**NEW OFFICE ANNEX (NOX).** In terms of physical security for overseas U.S. Government (USG) facilities, a new office annex (NOX) is an office building constructed on an existing compound by or on behalf of USG.

**NEW OFFICE BUILDING (NOB).** In terms of physical security for overseas U.S. Government (USG) facilities, a new office building (NOB) is an office building or compound constructed by or on behalf of USG which was at the 35% design development stage subsequent to June 1991.

**NEWLY ACQUIRED BUILDING (NAB).** In terms of physical security for overseas USG facilities, a newly acquired building (NAB) is an office building or compound not constructed by or on behalf of USG which was acquired by purchase, lease, or other means, subsequent to June 1991.

**NON-INSPECTABLE MATERIAL.** Materials that cannot be inspected through means approved by Bureau of Diplomatic Security (DS) or Security Management Division (OBO/PE/SM). Examples include pre-cast concrete as well as assembled electrical/electronic units such as light fixture ballast, switches, motors, and breaker panels.

**NON-PERMANENT FACILITIES.** Structures designated by OBO intended for occupancy for a period greater than 180 days and not to exceed five years

**PAA**. Public Access Area.

**PAC.** Public Access Control, a personnel screening process inside all CACs and office building entrances that admit the public.

**PCC.** Post Communications Center. An area within the Chancery or Consulate where post communication activity takes place. *Also* - An area within the Chancery/Consulate requiring the highest levels of protection where intelligence,

cryptographic, security, and other particularly sensitive, and other particularly sensitive or compartmentalized information may be handled, stored, discussed or processed. The PCC normally includes the common transmission facility (CTF), information program center (IPC), information technical center (ITC), and the communications support activity (CSA).

**PDS.** Protected Distribution System.

**PERIMETER.** The outermost area over which the post has control and is normally defined by the property line.

**PERIMETER BARRIER.** A wall, fence, structure, or a natural topographic feature which provides protection to the compound. The outer defensive tier of the compound.

**POST ONE.** Marine security guard location generally staffed on a 24-hour basis. Post One is the primary guard booth for a DOS facility and is normally located at the main PAC E/E to a diplomatic facility. Secondary guard booths at the same facility will be designated as Post Two, Post Three, etc, and are staffed by MSGs, CAGs, local FSN guards, or receptionists. Also known as "MSG-1" and "Guard Post 1."

**PROTECTED AREA.** Any area protected solely by perimeter security measures that are not behind the building hardline.

**PUBLIC ACCESS AREA (PAA)**. An area within the building, outside of the General Work Area, where services are provided to general public; and where locally employed staff and uncleared personnel have unrestricted access.

**PUBLIC ACCESS CONTROL (PAC).** An area provided for the screening of visitors and employees before admittance into areas behind the hardline.

**PUBLIC AREA.** An area not normally occupied and used only for circulation of the public (i.e., elevator lobbies and corridors). Waiting areas in consular sections of new and existing office buildings are considered as public areas.

**PUBLIC OFFICE FACILITY.** Facility which exists for use of public functions such as libraries and cultural centers. It is located in a commercial or residential building not collocated with the chancery or consulate. No classified material is maintained. U. S. Government may or may not be sole occupant.

**RAA.** Restricted Access Area.

**RANDOM PROCUREMENT.** An approved method, which must be executed in accordance with Office of the Procurement Executive (A/OPE) Procurement Policy Directive No. 5, whereby vendor is selected at random from among number of possible vendors (usually 3 or more), each of whom has been identified as able to supply required item in required quantity from shelf stock. The required quantity of item is procured and immediately taken into controlled possession by cleared U.S. Citizen, and transported to Controlled Access Area(s) (CAA) or secure storage area (SSA), without vendor's prior knowledge of intended procurement, and without referrals to or from vendor. This process is generally limited to procurement of low-volume and emergency items involving CAA. Cleared U.S. Citizen (e.g. Contractor or Contracting Officer) is required to make random selection of required units from vendor's shelf stock.

**RANDOM SELECTION.** A process in which a limited percentage of materials, originally procured without security restriction for non-specific common use, are randomly selected upon receipt of bulk shipment materials for specific use in Controlled Access Area(s) (CAA).

**RAW MATERIALS.** Unfinished materials, normally unprocessed natural materials, and non-fabricated products, for use in construction, manufacture, or assembly of building components. Examples include water, aggregate, sand, and cement/gypsum/lime.

**RESTRICTED AREA**. Those areas of the CAA where unescorted access is limited to authorized U. S. citizen personnel possessing at least a SECRET clearance. Uncleared personnel must be under the continuous escort of appropriately cleared U.S. citizen personnel.

**RF SHIELDING.** Radio Frequency Shielding.

**RMS.** Roof Maintenance Shed.

**RSO.** Regional Security Officer.

**SAFE AREA.** A designated area within a building that serves as an emergency sanctuary and provides at least 15-minute forced-entry and ballistic-resistant (FE/BR) protection, emergency power, ventilation, communications, and emergency escape.

**SAFE HAVEN.** A designated area within a building that serves as an emergency sanctuary and provides at least 60-minutes forced entry and ballistic-resistant (FE/BR) protection, emergency power, ventilation, communications, and emergency escape.

**SALLYPORT**. An enclosed area used for verifying identity and conducting inspections before allowing a vehicle or pedestrian to continue into the protected area. Usually incorporates double barriers to prevent tailgating.

**SCC.** Security control center.

**SD-STD-01.01.** DS Certification Standard – SD-STD-01.01 *Forced Entry and Ballistic Resistance of Structural Systems*. Available upon request and with a need to know. For projects using the GPE program, OBO has addressed the product requirements associated with this standard.

**SDA.** Staff Officer's Residence. (Derived from obsolete term “Staff Diplomatic Apartment”.)

**SECURE AREA *.** Obsolete. See Safe area and Safe haven.

**SECURE ROOM.** A specifically designated room used to house security containers protecting classified information and/or equipment. See Section 422.2.5.6.

**SECURE PROCUREMENT**. An approved method of acquiring materials destined for Controlled Access Area(s) (CAA). Shipment of materials is done by secure transit.

**SECURE STORAGE AREA (SSA).** Independently fenced and alarmed area, container, structure, or portion of structure, secured by Bureau of Diplomatic Security (DS)-approved means (e.g., approved locks, CCTV, contact and volumetric alarms, FPS alarm, under continuous 24-hour control of cleared American personnel), and located at Project Site. Inspectable and non-inspectable materials destined for use in Controlled Access Area(s) (CAA). Options include: Specifically prepared secure room with door-to-ceiling, slab-to-slab construction of some substantial material with minimum solid wood core or steel clad door and equipped with approved controlled security-keyed deadbolt or integral changeable combination lock. Secure shipping container located within secure perimeter and

continuously monitored by cleared U. S. Citizen employee. Room or outside location enclosed by secure perimeter under direct observation of cleared U.S. Citizen employee. Within the Controlled Access Area.

**SETBACK.** The distance from the interior face of the perimeter anti-ram barrier to the exterior face of a building. Refer to OBO-IZC ICS Chapter 6 for minimum requirements.

**SHIELDING – ARCHITECTURAL.** An area of the building which has undergone special treatment which includes the addition of a liner to cover walls, floor and ceilings.

**SHREDDER.** A DOS-approved machine for destruction of paper by cutting and chopping into confetti-like particles; provides a lower level of destruction than a disintegrator (see Disintegrator).

**SIC.** Systems Interface Cabinet.

**SITE SECURITY MANAGER (SSM).** Designated USG representative responsible to the Project Director/COR for all site security matters involving CAA construction projects.

**SOLE OCCUPANT OF BUILDING/COMPOUND.** Stand-alone facility (not a Chancery/Consulate) on its own compound or in a commercial office building with U. S. Government (USG) as sole occupant. May hold a limited amount of classified material and hosts a limited number of tenant agencies (USIA, Agriculture, Commerce, USAID). Formerly "Type 2 facility.

**SPALL/SPALLING.** Target or bullet material which is broken free due to ballistic impact and projected into the surrounding area.

**SRWF.** Shatter Resistant Window Film.

**SSM.** Site Security Manager (an on-site officer responsible for security matters related to construction).

**SSO.** Senior Security Officer in charge.

**STANDOFF.** See "Setback".

**STE.** Secure Telephone Equipment. Digital-based secure telephone device. It replaces the Secure Telephone Unit – third generation (STU-III).

**SYSTEMS INTERFACE CABINET (SIC).** The terminal wiring interface for all electrical security systems within a building, such as alarms. This cabinet will be in a dedicated room located as close to the MSG booth as possible. The door to the SIC room must be alarmed. The room will normally possess an interior area of at least 14 $m^2$ (150 square ft.).

**TEMPORARY FACILITIES.** Structures erected for a period of less than 180 days. See also Non-Permanent Facilities..

**TEMPORARY SECURITY EQUIPMENT AND FACILITIES (TSEF).** All apparatus, services, cameras, sensors, supporting utilities, lay-down yards, containment areas, warehouses, fencing, gates, control points, inspection areas and the like, used to effect appropriated levels of security during the construction phase. This equipment and facilities may be, but are usually not included in the permanent facility; they are established to ensure the security of the process of creating the permanent facility.

**UN-CLEARED WORKER**. Any worker, including U.S. Citizen, who does not possess Bureau of Diplomatic Security (DS)-approved security clearance.

**UNCONTROLLED (AREA).** Any area outside the PAC or an area controlled by measures that can be circumvented surreptitiously or forcibly.

**UNRESTRICTED PROCUREMENT**. The acquisition (purchase and shipment) of any material for use on Project without security control or safeguard. Use of such material in Controlled Access Area(s) (CAA) may be subject to other security controls (e.g., secure storage, random selection, Bureau of Diplomatic Security (DS)-approved inspection techniques).

**VAULT.** A space constructed to enclose and safeguard sensitive material or operations.

**VISITOR.** (1) Personnel seeking access to Construction Site, Support Site, or Secure Storage Area (SSA) who do not have processed and approved Optional Form 612, or similar approved form, on file with Project Director/COR. (2) Persons seeking access to a diplomatic mission in official or business capacity.

**WINDOW GRILLE.** Spaced, rigid bars which are mounted over exterior windows (or other man-passable penetrations of the host structure) to prevent access.

**WTMD.** Walk-Through Metal Detector.

**ZONE I.** Building exterior surfaces - entrances, walls, and roof.

**ZONE II.** Exterior areas near buildings - roadways and walkways.

**END OF CHAPTER 2 AMENDMENTS**

# CHAPTER 3
# USE AND OCCUPANCY CLASSIFICATION

## SECTION 303
## ASSEMBLY GROUP A

**Expand Subsection 303.1 A-2 definition to include:**

Representational spaces in on-compound and off-compound representational housing in accordance with Section 428.

**END OF CHAPTER IBC-3 AMENDMENTS**

# CHAPTER 4
# SPECIAL DETAILED REQUIREMENTS BASED ON USE AND OCCUPANCY

## SECTION 414
## HAZARDOUS AND TOXIC MATERIALS

**Add the following Subsection:**

**414.8 Toxic Materials.**

**414.8.1 New use.** Toxic materials exceeding identified minimum levels are not permitted in the design of new buildings or renovations of existing buildings, including but not limited to the materials identified below.

1. Asbestos Containing Materials (ACM): Materials with asbestos content exceeding 10,000 ppm (1 percent).
2. Lead Paint: Paint with lead content exceeding 5,000 ppm 0.5 percent.
3. Polychlorinated Biphenyls (PCB): Transformers with PCB levels exceeding 500 ppm (0.05 percent).

**414.8.2 Abatement.** Unless directed otherwise in writing by OBO/CFSM/FM through the COR, construction contractors shalll not perform abatement of hazardous materials.
**1.** If a construction contractor encounters hazardous or toxic materials, they shall contact the COR. Abatement procedures will be contracted to a separate contractor under the direction of OBO, with coordination by OBO/CFSM/FM.

**Replace Section 421 with the following:**

## SECTION 421
## SPECIAL FIRE PROTECTION REQUIREMENTS FOR ALL OCCUPANCIES

**Add the following Section:**

**421.1 Windowless Buildings (All Occupancies).** All buildings with non-operable windows, windows not readily breakable, or without windows shall be provided with approved automatic sprinkler systems. Refer to OBO-ICS IFC Section 903 for requirements.

**421.2 Computer, Telephone Switch/Frame Rooms and EC/SIC Rooms.** These rooms shall be provided with automatic fire detection/fire sprinkler protection. In facilities where no fire sprinkler system is installed, automatic fire detection requirements shall be provided.

**421.3 Construction Requirements for Electronic Equipment Areas.** All walls, floors, and ceilings surrounding the communications room and the structural members shall be provided with at least 1 hour fire resistive protection. The principal supporting members (including columns, trusses, girders, and beams) between the room and the building foundation shall be at least 1-hour fire rated construction.

**Replace Section 422 with the following:**

SECTION 422
**PHYSICAL SECURITY REQUIREMENTS FOR OCCUPANCIES**

**Add the following Section:**

**422.1 Scope.** The provisions of this section apply to new construction for U.S. Diplomatic Mission buildings overseas. In addition, standard physical security details for buildings are included in OBO-ICS IBC Appendix N (The Physical Security Detail Handbook). Physical security requirements associated with a site are identified in the IZC in either Section 503 for Residential Zone, 603 for Office Compound Zone, or 703 for Support Facilities Zone, as applicable to a project. Standard physical security details for site work are included in Appendix A of the IZC. The introduction to each of the building type in this section identifies that applicability of requirements outside of this section. This section identifies physical security requirements for the following building types:

1**New Office Buildings (NOB).** A new office building (NOB) is an office building constructed by or on behalf of the U.S. government. See Section 422.2.

Chancery or Consulate Building is a high visibility facility with or without its own compound, usually containing classified or sensitive information or equipment, occupied by a large number or wide range of U.S. Government interests and activities. Office Annexes (NOX) and Support Annexes (GSO) containing U.S. citizens, located on the same compound as a Chancery or Consulate may also be considered a Chancery or Consulate.

Sole Occupant is a Sole Occupant of a building or in a commercial office building with the U.S. Government as the sole occupant. A Sole Occupant building may contain a limited amount of classified material, and host a limited number of U.S. tenant agency.

Unless specified otherwise, requirements pertain to chancery or consulate and to Sole Occupant Building. When requirements are different, the difference is noted in the project Statement of Work or other project-specific document.

2**Compound Access Control (CAC) Facilities** See Section 422.3.

3**Warehouses**: See Section 422.4.

4**Housing**: See Section 422.5.

5 **American Broadcasting Bureau (ABB) Relay Stations**: See Section 422.6.

6**Parking Structures**: See Section 422.7.

**422.2 New Office Buildings (NOB).**

**422.2.1 Office Suites and Rooms.** Special physical security requirements for portions of the NOBs include the following:

**422.2.1.1 Building Entrances.**

**422.2.1.1.1 Main Entrance and Lobby.** The main entrance is the point of reception and entry for most visitors. The main lobby serves as a primary circulation point for the building, and provides access to other public functions such as the Multi-Purpose Room and the Information Resource Center

(IRC). At posts where there is not a separate Consular entrance, this will also function as the Consular entrance. It is the next level of security screening after the CAC. Security measures at the main entrance must be complete, professional, and uncompromising, while at the same time not be forbidding or oppressive

**422.2.1.1.1.1 Security Screening.** Security screening at the main lobby consists of a local guard, seated at a package inspection and storage desk, and WTMD(s). Locate the security screening so it is directly in front of the main entrance door, such that all personnel and visitors are directed toward the local guard and WTMD. Provide sufficient space that a second WTMD can be installed if needed.

**422.2.1.1.1.2 Waiting Area.** Provide seating for visitors in an area that is out of the line of circulation, but visible to the MSG.

**422.2.1.1.1.3 Openness.** Design the main lobby so that it is column-free. Ensure that the MSG has uninterrupted, unobstructed sight lines of all activity in the lobby, and all points of access to/from the lobby.

**422.2.1.1.1.4 MSG Booth.** The MSG Booth is the heart of the lobby oversight and control mechanism. The booth must be centrally located so that the MSG has total oversight of all activities in the lobby and can clearly see all hardline doors in the lobby.

**1**. The MSG booth shall be adjacent to the Receptionist booth, with an adjoining teller window. The adjoining teller window may not be required on certain project. Refer to project specific requirements for direction.

**2.** The MSG needs to communicate with staff and visitors on the lobby side of the booth. Provide a teller window for this purpose.

**3.** The MSG needs to communicate with staff on the protected (GWA) side of the booth. Provide a teller window for this purpose, located so that persons waiting at the window are not located in circulation path.

**4**. MSG shall have visual control of key management system “key watcher “ system. This system is to be located behind the lobby hardline.

**5.** See Section 422.2.1.2 for more specific MSG booth interior requirements.

**422.2.1.1.1.5 Receptionist.** When required by the SRP, provide a booth for the Receptionist, also centrally located in the lobby. The booth shall be adjacent to the MSG booth, with an adjoining teller window.

**422.2.1.1.1.6 Interview Room.** Locate the Interview Room with one entrance in the Main Lobby, and one entrance from the GWA. The entrance from the GWA shall not be in direct visual line of sight from the Receptionist._Design the Interview Room to be sub-divided into two areas: a “public” side with a table and chairs, and a “private” side with a closet/storage area. These two sides are linked by a locking door. Provide STC-50 for all partitions surrounding and within the Interview

Room. Do not provide transparent glazing in doors to the Interview Room. Doors within the hardline are not required to meet the STC-50 requirement stated above.

**422.2.1.1.1.7 EC Room.** Provide an EC Room in the main lobby area.

1.Connection to MSG Post 1: The EC Room has a direct relationship to MSG Post 1, and shall be located to allow easy access for services between the rooms. First preference is for the EC Room to be directly adjacent to MSG Post 1; the next is to be above or beneath MSG Post 1. If direct adjacency cannot be accomplished, then the closest proximity possible should be sought.

2.Location: Locate the EC Room behind the primary and secondary (if applicable) hardline(s).

3. Size and Shape: Size the EC Room per the SRP. The EC Room shall be rectangular in shape, with the smallest dimension not less than 2.5 m.

**422.2.1.1.1.8 Other Requirements**

1. Cabinetry at WTMD: The WTMD has external vertical indicator lamps, which cannot be obscured from view. Do not enclose the WTMD in an architectural façade or cabinetry that hides the indicator lamps from view.

2. Circulation: Design the building so that staff does not transit the lobby except for entering or exiting the building. All internal circulation is to be located behind the appropriate level of hardline.

**422.2.1.1.1.9 Description of Circulation.** Described below are various means of entering the Main Lobby:

1. Main Lobby with Multi-Purpose Room or Conference Center Functions: The local guard is the first station that all persons pass through when entering the main lobby. The local guard performs the visitor inspection procedure under the direct line of sight from MSG Post 1. The local guard is located at an open inspection desk that allows the guard to check bags, cameras, and other miscellaneous items. Adequate space is needed to store collected items. Visitors pass through the WTMD, which is adjacent to the inspection desk. They then proceed to a receptionist, who will provide them with directions and information. If required, they will obtain temporary identification badges from the MSG. Upon exiting, visitors will return their visitor's passes and retrieve any personal items left upon entry. Entrance and exit paths shall be clearly defined, allowing for a smooth and efficient flow, both by visitors and employees.
2. Visitors to the GWA and CAA: For most visitors to the GWA or CAA, the Receptionist will telephone the appropriate office so a staff member can come to the lobby to escort the visitor. The visitor then waits in the lobby until the escort arrives.
3. Other Escort Requirements: Escorts are not required when visiting PAA areas such as the Multi-Purpose Room or the IRC.
4. Provide interior access from the Main Lobby to the Consular Waiting Area.

   A. Access shall be through a hardline door controlled from Post 1.

B. Locate hardline door to exterior side of the Lobby Local Guard Station and the Walk-Through Metal Detector(s).

C. Limited access between lobby and consular waiting is for maintenance and is intended for use when consular visitor hours are over.

**422.2.1.1.1.10 Key management system.** Provide illuminated key management system "key watcher" mounted behind hardline and located to provide easy visual control from Post 1.

**Exception:** At existing facilities, if direct visual control from Post 1 is infeasible, OBO may authorize the use of monitoring through a DVR-recorded CCTV camera that is fixed on the key management system.

**422.2.1.1.2 Consular Entrance.** Provide a separate Consular entrance unless otherwise directed by OBO.

**422.2.1.1.2.1 Entrance.** Design the Consular entrance in such a way that visitors will clearly know that it is the Consular entrance and not the Main entrance. Normally, staff does not use the Consular entrance door.

**422.2.1.1.2.2 Security Screening.** Security screening at the consular lobby consists of a local guard, seated at a package inspection and storage desk, and WTMD(s). Locate the security screening so it is directly in front of the Consular entrance door, such that all visitors are directed toward the local guard and WTMD. Provide sufficient space that a second WTMD can be installed if needed.

**422.2.1.1.2.3 Egress and Circulation through Hardline.** Do not provide a connection between the Consular Lobby/Waiting Area and the GWA. Design the fire egress so that it does not transit the Consular section teller line.

**422.2.1.1.2.4 Cabinetry at WTMD.** The WTMD has external vertical indicator lamps, which cannot be obscured from view. Thus, enclosing the WTMD in an architectural façade or cabinetry is discouraged.

**422.2.1.1.3 Service Entrance.** Locate the service entrance at the loading dock of the building. This entrance has a lobby with a local guard screening area, WTMD, and may have MSG booth, and secondary EC Room. Design the lobby so it is column-free and the MSG has uninterrupted, unobstructed sight lines of all activity in the lobby and of all points of access to the lobby. Requirements previously described for the Main Lobby and EC Room also apply to the Service Entrance.

**422.2.1.2 Marine Security Guard Booth** The term "MSG booth" is used to refer to any guard booth located at a building entrance, controlled by either MSGs or other cleared American or local guards. There may be MSG booths at the Main Entrance and the Service entrance to the NOB.

**422.2.1.2.1 FE/BR Protection.** Provide protection as identified in Section 422.2.5.

**422.2.1.2.2 Location.** Configure the MSG booth so that its door opens into the GWA, behind both the primary and secondary hardlines.

**422.2.1.2.3 Walls**

1. Provide opaque walls from the floor to a height of 1130 mm.

2. The MSG booth contains a significant amount of equipment, much of it wall-mounted. The Contractor shall balance the desire for glazing with the required area needed for mounting equipment.

**422.2.1.2.4 Ceiling.** Provide a suspended (removable) ceiling in the MSG booth.

**422.2.1.2.5 Lighting.** Provide adequate lighting with a dimmer switch.

**422.2.1.2.6 Ventilation.** Provide a dedicated VAV terminal capable of heating and cooling 24 hours/day under positive pressure with respect to adjacent PAA areas.

**422.2.1.2.7 Interior Layout.** Coordinate the interior layout with the technical security equipment design as shown on Post One layout. MSG Post 1 will contain one GSA Class V 2- or 5-drawer safe, one weapons rack, one or more key cabinets, fire alarm control panels, elevator control panels, compound lighting controls, sprinkler controls, vehicle barrier master control, badge cabinet, base radio, phone master control, flashlight shelf, recharging station, first aid kit, log book storage, react gear for MSG on duty, an override and recall for 1 elevator to any designated floor, several technical security equipment racks, radios, telephones, an unclassified computer terminal, and an SMSe computer terminal with associated monitors, an emergency cut-off switch for all environmental security, and a cut-off switch for the lobby ventilation system. The equipment racks are approximately 680 mm deep, 580 mm wide, and either 1060 or 1980 mm high. A preliminary estimate of the number of racks is four shorter racks at the front of the booth and one taller rack at the sides of the booth. MSG Post 2, if applicable, will contain one key cabinet, one or two short technical security equipment racks, radios, telephones, and an unclassified computer terminal.

Controls shall be mounted in racks and not be mounted on horizontal countertops. Areas in front of deal trays shall be kept clear of equipment and racks. Racks shall be ergonomically designed for ease of access to frequently used controls. Barrier and Gate controls shall be located adjacent to each other in the rack and close to monitors displaying the vehicle entrances. Controls shall be clearly marked.

**422.2.1.2.8 Maintenance Access.** Provide sufficient clearance at the technical security equipment racks to allow maintenance access for the equipment. A minimum of 760 mm clearance is required at the front of the racks. A generally workable depth for the MSG booth of 3 to 4 m should be considered.

**422.2.1.2.9 Raised Floor.** Do not provide a floor raised in relation to the surrounding areas.

**422.2.1.2.10 Glazing.** Tinted glazing and / or tinted film are not permitted at MSG booths.

**422.2.1.2.11 Other Requirements.** Other requirements for the MSG Booth are listed in Section 422.2.1.1.

**422.2.1.2.12 Future Expansion.** Provide adequate spare conduit and cooling equipment expansion based on the projected design load.

**422.2.1.3 Controlled Access Area (CAA)**

**422.2.1.3.1 Perimeter Construction.** Refer to Section 4 of the classified Information Management and Emanations Security (classified) for requirements regarding treatment of perimeter floors, walls, windows, doors, and ceilings.

1. CAA doors shall be equipped with DS approved deadbolt lock. A DS approved three position spin dial is acceptable.

2. All Slab-to-Slab walls within the CAA require CAA tamperproof grille protection. See OBO-ICS IBC Appendix N (The Physical Security Detail Handbook) for details. An acoustic silencer may take the place of the tamperproof grille when acoustic silencer is located within the wall.

3. Refer to classified criteria for additional requirements.

**422.2.1.3.2 Inspectability of CAA-Related Building Systems.**

**422.2.1.3.2.1 Within Controlled Access Areas (CAA).** All interstitial spaces above suspended ceilings and/or below raised flooring shall be accessible for physical and visual inspection.

1. No area containing C-LAN conduit or raceway shall be located more than 1.2 m from an access point

**422.2.1.3.2.2 Outside of CAA.** C-LAN conduit and raceway connecting one CAA to another CAA, and which transits Non-CAA space(s) shall be installed in the equivalent of a Protected Distribution System (PDS).

1. Provide direct, continuous visual and physical inspectability over the portion of conduit or raceway located outside of CAA.

2. Inspectability in this application is defined as the ability to be performed while standing on the floor, without removing ceiling coverings (i.e.; ceiling tiles), removing wall coverings, floor coverings (i.e., raised floor) and without using any aids except a flashlight.

**422.2.1.3.3 Limiting Unique Design Elements.** Limit the use of unique construction elements within the CAA due to security restrictions regarding procurement, shipping, storage, and installation of these items. Avoid custom pieces or finishes not commonly used throughout the building because of repair and replacement security restrictions.

**422.2.1.3.4 CAA corridor.** Provide a corridor between GWA and CAA suites. The corridor shall be built to CAA requirements including walls, penetrations, doors, door hardware and alarms. The corridor may not be used to store, process, or discuss classified information. Each suite perimeter will still require as a minimum of slab-to-slab wall construction with tamperproof grilles (see OBO-ICS IBC Appendix N (The Physical Security Detail Handbook) for grilles), and CAA doors and hardware.

**422.2.1.4 Safe Haven and Safe Area** Requirements for safe havens and safe areas are described below. Locations where they are required, and the level of protection required, are described in Section 422.2.5.

**422.2.1.4.1 General.** Provide the following for both safe havens and safe areas:

**422.2.1.4.1.1 Ventilation.** Provide a ventilation system with emergency power on the protected generator to produce a minimum of six air changes per hour.

**422.2.1.4.1.2 Egress.** Provide two means of egress from the both Safe Haven and Safe Area. This point of egress should access a different circulation route than the main entry to the Safe Haven or Area. The egress may be via door or roof hatch. A fire second means of egress meets this requirement. A "secure stairwell" is not required.

**422.2.1.4.1.3 Storage Room.** Provide a storage room and shelving system within the Safe Haven and Safe Area using a modular shelving system. Storage shall be for medical supplies, safety equipment, water and food, and other emergency equipment; Potable water will normally be provided by bottled water.

**422.2.1.4.1.4 Equipment Closet.** Provide a small equipment closet and equipment rack, with lockable bi-fold closet doors, to house one technical security equipment rack. The equipment rack shall conform to EIA standards, and shall have minimum dimensions of 560 mm width by 1830 mm height. Refer to the Technical Security Design and Installation Requirements attachment if applicable to the project.

**422.2.1.4.1.5 Communication Requirements.** Provide a minimum of one direct outside telephone line that bypasses the post switchboard.

**422.2.1.4.1.6 Fire Protection of Duct Openings.** Provide 1 - ½ hour fire protection. Duct openings must be protected by a 2-hour fire and smoke damper.

**422.2.1.4.1.7 Emergency Power.** Provide emergency power supplied by generator. Either one or separate generators may be used, and they must be protected to the higher level of FE/BR protection being served by the generator; see FE/BR requirements in Section 422.2.5.

1. Power Feed Protection: If the power feed between the Safe Haven or Safe Area and the emergency generator runs directly through an Uninterruptible Power Supply (UPS) with no alternate power feed, the UPS room also shall be provided with the same FE/BR protection required by the Safe Haven or Safe Area.

2. Utility Lines: Provide rigid steel conduit for Safe Haven and Safe Area utility lines between the generator room and the Safe Haven or Safe Area. If the generator room is located in a separate building, buried Schedule 80 rigid nonmetallic conduit may be used to protect the power transmission lines.

**422.2.1.4.2 Safe Haven.**

**422.2.1.4.2.1 Size.**

For planning purposes, the amount of floor space provided in safe havens is at least 10 square feet (.93 m2) per person, exclusive of space that any equipment occupies or that is otherwise unavailable. Occupancy levels are post and site specific and based on the number of assigned personnel and their work location within the building or compound.

Safehavens in new facilities are constructed to accommodate personnel according to the size of the post (as determined by calculating the assigned desk staff):

For posts with less than 50 total desk staff, the safe haven shall be sized to accommodate all assigned staff.

For posts with larger than 50 total desk staff, the safe haven shall accommodate 50 people.

The location, size, and the restricted and sensitive aspects of the PCC's operation limit its usefulness when used as a safe haven for the entire staff unless a common user room or other area, accessed from the PCC vestibule, is provided for this purpose. Additional safe areas are required to accommodate the remaining personnel A safe area's population is calculated based on the total desk population, minus the number of staff to be sheltered in the (PCC) safe haven, plus 10% (staff allowance factor). To calculate the required safe area size, the total safe area population is multiplied by 10 square feet per person, plus 15% (furniture/equipment factor).

Such supplemental safe areas cannot be located on the ground floor of a building. While it is highly preferable that safe areas be located above the ground floor level, placement of safe areas in an appropriate basement configuration is an option to be considered on a case by case basis. The supplemental safe areas may consist of an entire floor or wing of a building. Safe havens and safe areas must be readily accessible and quickly secured. At small posts, one safe haven or safe area may suffice, while larger posts with multiple office buildings on a compound may require two or more.

Safe havens for embassies and consulates are constructed of fire-resistant materials and designed to resist forced entry and ballistic penetration (60 minute FE/BR).

Safe havens must provide water, sanitary facilities (chemical toilets are not permitted), ventilation, and other equipment for the specified level of occupancy. Elements of those systems located outside the safe haven are vulnerable to tampering or sabotage and must, therefore, be concealed, inaccessible, or otherwise protected. All duct and pipe penetrations of any safe haven/area perimeter (i.e., walls, floors, and ceilings) must have forced-entry and ballistic-resistant (FE/BR) protection. A ventilation system must provide a minimum of six air changes per hour. The intake and discharge of this system must be fully protected. Fresh air intake vents will be placed at a minimal height of 16 feet (5 meters) above grade/climbable platform. This system must be served by protected (60 minute FE/BR emergency power, an emergency generator.

In addition to the safe haven primary entrance/egress, a second egress must exist. This is referred to as the emergency egress. This second egress must provide the appropriate level of FE/BR protection and allow egress from the safe haven to an area away from the primary entrance/egress. Fire code or safety requirements for an emergency exit may or may not be met by this standard and must also be a design consideration.

All safe havens at a post should have interconnectivity via communications links. Normally, both VHF/UHF radio and physically protected telephone communications provide this link. Safe havens should include at least one direct outside telephone line that bypasses the post switchboard.

All safe havens must have a secured storage area for emergency supplies (med kits, gas masks, water and food).

**422. 2.1.4.2.2 Glazing.** Glazing is not permitted in the perimeter of safe haven enclosures.

**422.2.1.4.2.3 Destruction Equipment.**

1. Provide a room to house a disintegrator. Provide three-phase power and an exhaust fan to the room. Provide acoustic protection for the partitions surrounding the disintegrator room; see Section 4 of the Information Management and Emanations Security Criteria, if applicable to the project.

2. Provide a disintegrator for the disintegrator room. In the PCC, provide two disintegrators. Each disintegrator system consists of one Security Engineered Machinery (SEM) Model 1012 disintegrator, SEM Model F-034 Fan Waste Evacuation System with 3/8" and 3/32" screens (1 each per disintegrator), and 3 sets of blades (per disintegrator).

**422.2.1.4.2.4 Fire Protection of Structural Members.** Structural members that support the safe haven shall have 2-hour fire resistance.

**422.2.1.4.3 Safe Area.**

**422.2.1.4.3.1**

**1** For planning purposes, the amount of floor space provided in safe areas is at least 10 square feet (.93 m2) per person, exclusive of space that any equipment occupies or that is otherwise unavailable. Occupancy levels are post and site specific and based on the number of assigned personnel and their work location within the building or compound.

A safe area's population is calculated based on the total desk population, minus the number of staff to be sheltered in the (PCC) safe haven, plus 10% (staff allowance factor). To calculate the required safe area size, the total safe area population is multiplied by 10 square feet per person, plus 15% (furniture/equipment factor).

Supplemental safe areas cannot be located on the ground floor of a building. While it is highly preferable that all safe areas be located above the ground floor level, placement of safe areas in an appropriate basement configuration is an option to be considered on a case by case basis. Safe areas may consist of an entire floor or wing of a building. Safe areas must be readily accessible and quickly secured. At small posts, one safe area may suffice, while larger posts with multiple office buildings on a compound may require two or more.

Safe areas for embassies and consulates are constructed of fire-resistant materials and designed to resist forced entry and ballistic penetration (15 minute FE/BR).

Safe areas must provide water, sanitary facilities (chemical toilets are not permitted), ventilation, and other equipment for the specified level of occupancy. Elements of those systems located outside the safe haven are vulnerable to tampering or sabotage and must, therefore, be concealed, inaccessible, or otherwise protected. All duct and pipe penetrations of any safe haven/area perimeter (i.e., walls, floors, and ceilings) must have forced-entry and ballistic-resistant (FE/BR) protection. A ventilation system must provide a minimum of six air changes per hour. The intake and discharge of this system must be fully protected. Fresh air intake vents will be placed at a minimal height of 16 feet (5 meters) above grade/climbable platform. This system must be served by protected (15 minute FE/BR emergency power, an emergency generator.

In addition to the safe haven primary entrance/egress, a second egress must exist. This is referred to as the emergency egress. This second egress must provide the appropriate level of FE/BR protection and allow egress from the safe haven to an area away from the primary entrance/egress. Fire code or safety requirements for an emergency exit may or may not be met by this standard and must also be a design consideration.

All safe areas at a post should have interconnectivity via communications links. Normally, both VHF/UHF radio and physically protected telephone communications provide this link. Safe areas should include at least one direct outside telephone line that bypasses the post switchboard.

All safe areas must have a secured storage area for emergency supplies (med kits, gas masks, water and food).

**422.2.1.4.3.2 Glazing.** The use of glazing is discouraged in safe areas, to prevent visual access of embassy personnel, but is not explicitly disallowed.

**422.2.1.4.3.3 Toilet Facilities.** Toilet facilities are required, and chemical toilets are permitted.

**422.2.1.4.4 Compound Emergency Sanctuaries. (CES)**

Plan CESs for the average number of employees normally occupying the unprotected functional areas not located in a 15 minute FE/BR protected building during established work hours. Use 10 square ft. (.93 m2) per person, excluding space for any equipment or unusable space, as a guide to calculate the approximate size of the area required. In a retrofit situation, adjust the square-ft-per-person density to meet existing structural limitations. Numbers and locations of required CES's will be provided on a project-specific basis.

CESs do not replace safe havens or safe areas; therefore, CESs do not require potable water and sanitary facilities. A code-compliant ventilation system must exist.

Provide 15 minute FE/BR walls, windows, and doors on all six sides of the CES. Concrete slabs on grade do not require FE/BR construction.

Space designated as CES may be used for other purposes on a daily basis.

CACs that meet current physical security standards may be used as the CES for employees working in the CACs.

Provide ventilation system, power, telephone, connectivity to the imminent danger notification system. Power for lighting and ventilation shall be connected to the Post back-up power system or provided with an alternative power source capable of delivering one-hour of light and ventilation. The power supply is not required to meet FE/BR standards.

At a minimum, compound emergency sanctuaries must have a telephone and a speaker connected to the emergency notification system (ENS)

In addition to the CES primary entrance, a secondary means of escape should exist where feasible and reasonable to provide a safe evacuation route away from the primary entrance, such as a penetration in an exterior wall floor or ceiling. The escape door/ hatch must have 15-minute FE/BR protection. There is an option to use a DS-approved escape hatch as a secondary means of egress. An escape hatch may or may not meet life-safety code requirements for an emergency exit, depending on its placement in wall, ceiling, or floor and the size and opening method of the hatch, so the designer must consider the effect of using this design option.

**422.2.1.5 Unclassified Computer Rooms** At all unclassified computer rooms throughout the building, including tenant-specific computer rooms in individual suites, the following requirements apply:

1. Surrounding Partitions: Provide slab-to-slab partitions.

2. Doors: Provide a solid core wood or hollow metal door with no glazing. Provide SHW-11 hardware.

**422.2.1.6 Pharmacy**

1. Partitions. Provide slab-to-slab partitions.

2. Doors. Provide a solid core wood or hollow metal door with no glazing. Provide SHW-11A hardware.

**422.2.1.7 EC Room**

1. Partitions: Provide slab-to-slab partitions.

2. Doors: Provide a solid core wood or hollow metal door with no glazing. Provide SHW-17 hardware. Provide SHW-17B where SMSE is used.

**422.2.1.8 Pager/Cell Phone Storage** Provide keyed and locking storage lockers outside of entrance(s) to the controlled corridor adjacent to the CAA.

1. Size: Provide various sizes of lockers, to accommodate cell phones, notebook computers, pagers, and other electronic devices.

2. Keying: Key lockers individually, with one master key.

3. Quantity of Keys: Provide three keys for each locker and two master keys.

4. Quantity of Lockers: Provide the same number of lockers as desks in the CAA, plus 10 percent.

**422.2.1.9 ID Picture Area** Area shall be located in an LAA or CAA.
1. Partitions: Provide slab to slab partitions.
2. Doors: Provide a solid core wood or hollow metal door with no glazing.
Provide Security Hardware Set (SHW) SHW-15C hardware.

**422.2.2 Areas of Access Control.** There are five areas of access control within the building:

**422.2.2.1 Public Access Area (PAA).** Area where locally employed staff and uncleared personnel have unrestricted access..

**422.2.2.2 General Work Area (GWA).** The area behind the hardline, where U.S citizen employees and authorized locally employed staff, as well as official dependents of U.S. citizen employees are permitted without escort. Sensitive But Unclassified (SBU) information may be handled, stored, discussed, or processed. No classified work may be stored, processed, or discussed in the GWA.

**422.2.2.3 Administratively Controlled Area.** Area in the building, behind the hardline, in which unescorted access is limited to authorized personnel, either LES or American, who work in those areas. Examples of such areas include:

1. Cashier booths
2. Unclassified computer rooms
3. Unclassified mail rooms
4. Health unit
5. Consular section (restricted files, equipment, supplies, and storage)

**422.2.2.4 Limited Access Area (LAA).** A non-controlled access area (non-CAA) equipped with DS-approved locks and alarms in which only authorized U.S. citizens with security clearances are permitted unrestricted access. Uncleared persons must be escorted.

**422.2.2.5 Controlled Access Area (CAA).** Specifically designated areas within a building, behind the hardline, where classified information may be handled, stored, discussed, or processed. There are two subdivisions within the CAA: Restricted and Core Areas.

1. Restricted Area: Those areas of the building in which classified information may be handled, stored, discussed, or processed. Classified discussions and processing are permitted, but may be limited to designated areas. Authorized uncleared U.S. and LES employees and visitors are permitted in the Restricted area, if they are properly escorted.

2. Core Area: Those areas of the building requiring the highest levels of protection. Uncleared U.S. employees or visitors are not permitted in the Core area.

**422.2.3 Circulation.**

**422.2.3.1 Fire Egress.**

1. Design the fire egress route so that the path is always from the more secure areas to or through the less secure areas of the building. Thus, for example, a second egress out of a public space such as the Multi-Purpose Room could only be located so that it transits either to another public space or directly outside.

2. The fire egress route is not permitted to transit the hardline in the Consular section. Do not provide any doors in the Consular hardline.

**422.2.3.2 Elevators.**

1. Design the circulation so that elevators do not cross a security zone boundary. For example, an elevator that originates in the GWA is not permitted to open into a CAA or controlled corridor adjacent to a CAA.

2. Provide a vestibule with emergency egress (for life-safety requirements) to separate elevators from CAAs or controlled corridors adjacent to CAAs. The egress route from an elevator vestibule is not permitted to access the CAA or a controlled corridor adjacent to the CAA.

3. All elevator control rooms, machinery space and control space shall be located in GWA space.

**422.2.3.3 CAA Restrictions to Circulation.**

1. Location: Locate CAA offices contiguous to each other to the maximum extent possible.

2. Visual: Design entrances to individual CAA office areas so that a person in the PAA or GWA is unable to determine which CAA office is being accessed.

3. Physical: Design entrances to individual CAA office areas so that they are physically protected from access by a person in the PAA or GWA. This necessitates the need for a GWA "controlled corridor" adjacent to CAA points of access to office suites.

**422.2.4 Required Blocking and Stacking Adjacency Relationships** Design of each NOB shall comply with Blocking and Stacking Matrix Scenario provided in project-specific information.

**422.2.5 Building Interior Security Partition Requirements.** There are several types of security partitions that may be used in this building, as described below.

A. Refer to Office Building Protected Spaces Diagrams, Figures 422.2.5. A through 422.2.5. E.

B. Refer to OBO-ICS IBC Appendix N (The Physical Security Detail Handbook) for design details of the various partition types.

**422.2.5.1 60-Minute FE/BR Protection.** Provide 60-minute FE/BR protection at the following areas:

**422.2.5.1.1 Chancery or Consulate Requirements**

1. Post Communications Center (PCC): Around the entire perimeter, including the floor and ceiling, of the PCC.

2. Safe Haven: Around the entire perimeter, including the floor and ceiling, of the safe haven(s).

3. Protected Generator: Around the entire perimeter, including the floor and ceiling, of the protected generator. A slab on grade is not required to meet this requirement.

4. Protected Generator Equipment: Around the entire perimeter, including the floor and ceiling, of areas housing automatic transfer switch (ATS) or other critical equipment for the protected generator. A slab on grade is not required to meet this requirement.

5. DEA and DAO Vault: Around the perimeter, including floor and ceiling, of the DEA and DAO system room.

**422.2.5.1.2 NOX**

1. Safe Haven: Around the entire perimeter, including the floor and ceiling, of the safe haven(s).

2. Protected Generator: Around the entire perimeter, including the floor and ceiling, of the protected generator. A slab on grade is not required to meet this requirement.

3. Protected Generator Equipment: Around the entire perimeter, including the floor and ceiling, of areas housing automatic transfer switch (ATS) or other critical equipment for the protected generator. A slab on grade is not required to meet this requirement.

**422.2.5.1.3 Sole Occupant Requirements.** There are different requirements for security partitions at Sole Occupant buildings, only one of which will apply at a particular post. The following criteria will apply unless otherwise noted.

1. Safe Haven: Around the entire perimeter, including the floor and ceiling, of the safe haven(s).

2. Protected Generator: Around the entire perimeter, including the floor and ceiling, of the protected generator. A slab on grade is not required to meet this requirement.

3. Protected Generator Equipment: Around the entire perimeter, including the floor and ceiling, of areas housing automatic transfer switch (ATS) or other critical equipment for the protected generator. A slab on grade is not required to meet this requirement.

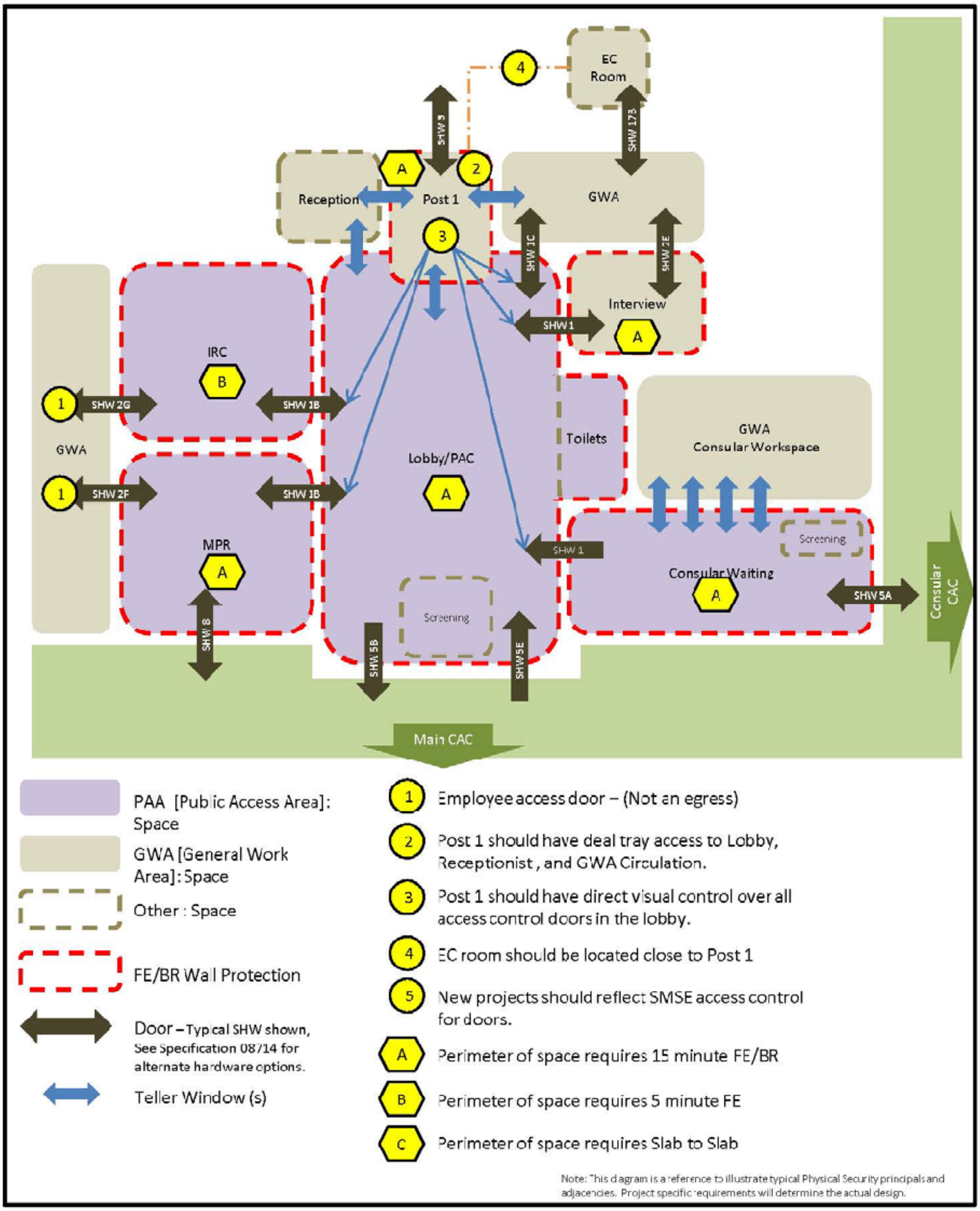


Office Buildings Protected Spaces Diagrams

Figure 422.2.5.A – Main Lobby Diagram

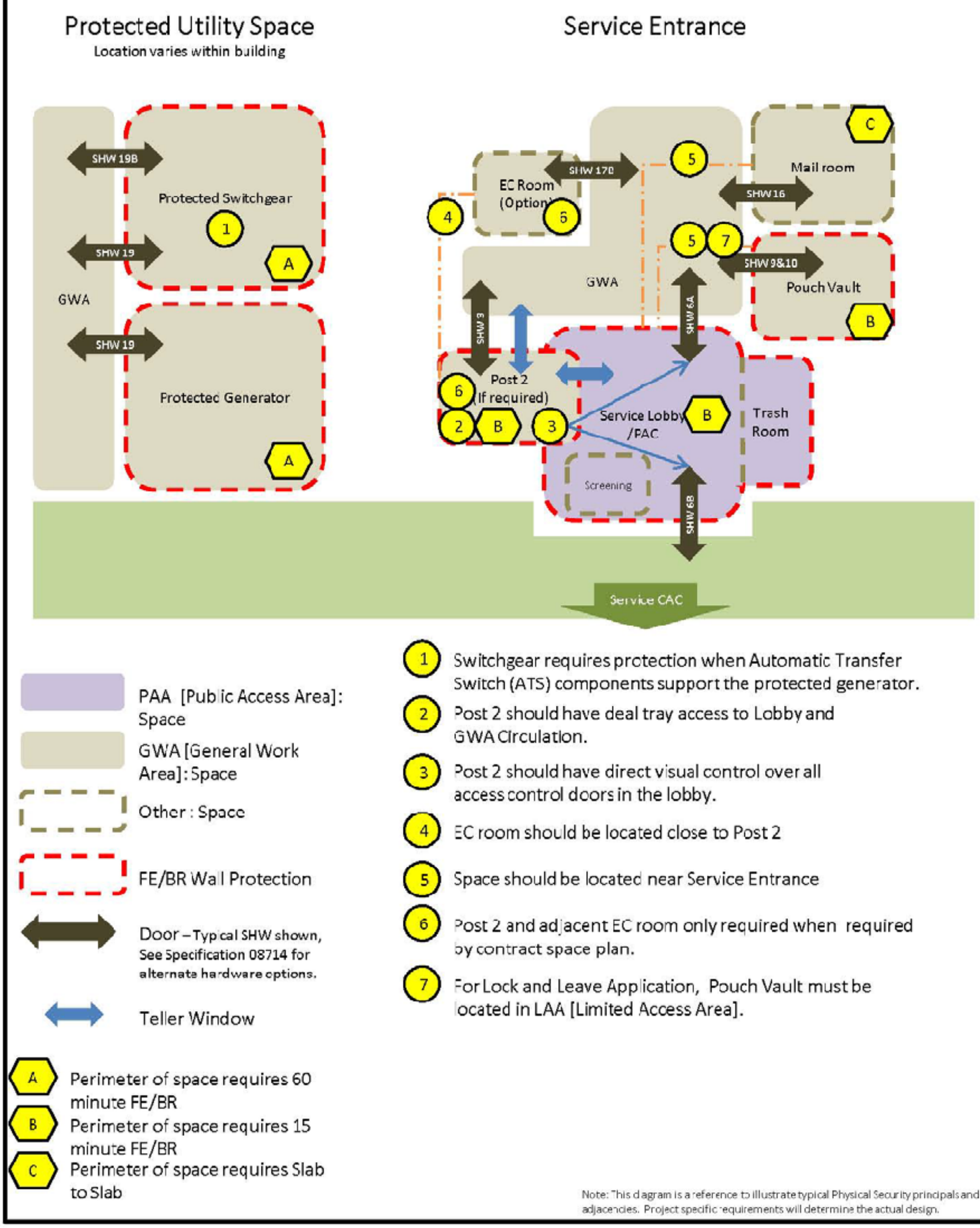


Office Buildings Protected Spaces Diagrams
Figure 422.2.5.B - Service Spaces

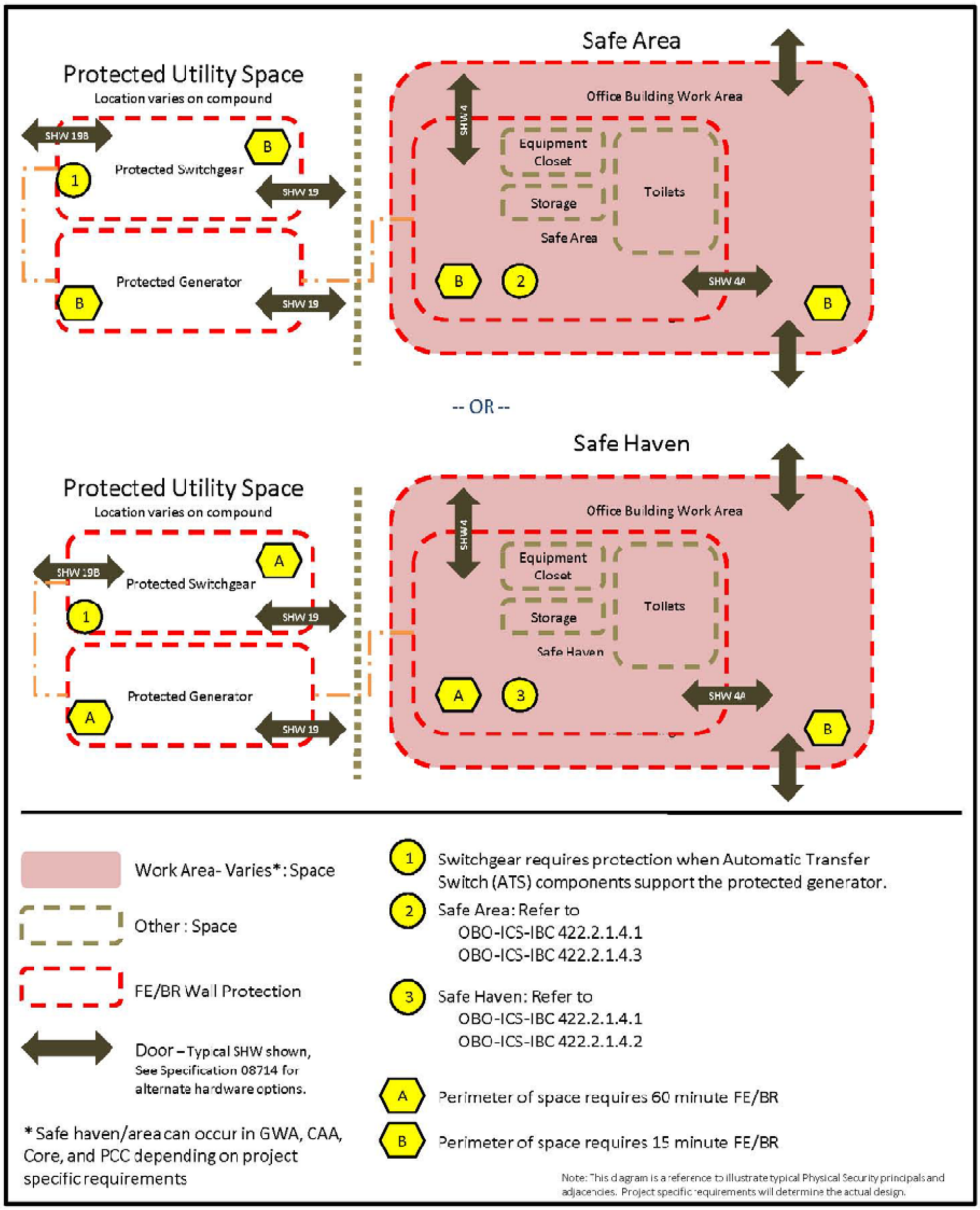


Office Buildings Protected Spaces Diagrams
Figure 422.2.5.C - Safe Area

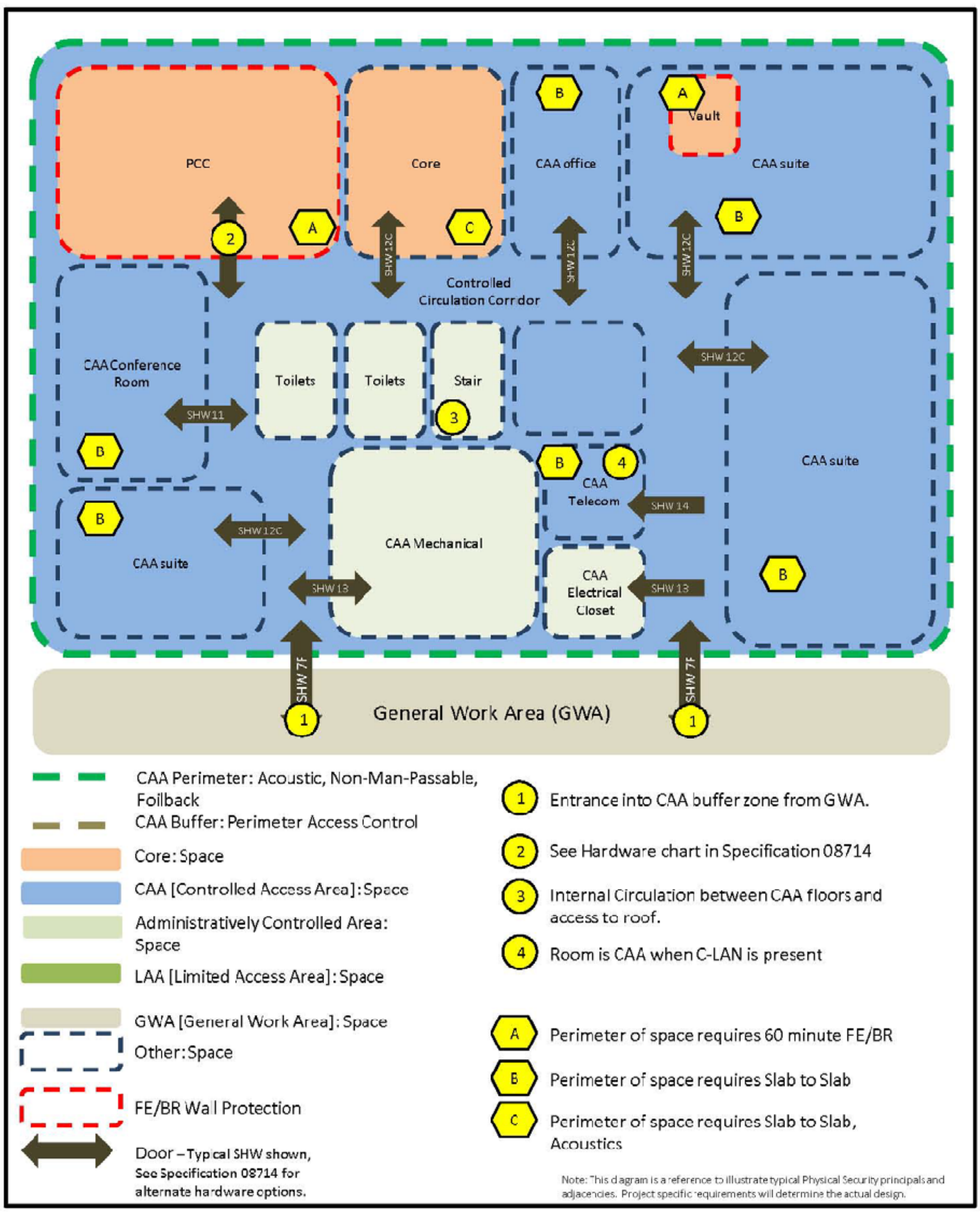


Office Buildings Protected Spaces Diagrams
Figure 422.2.5.D - CAA

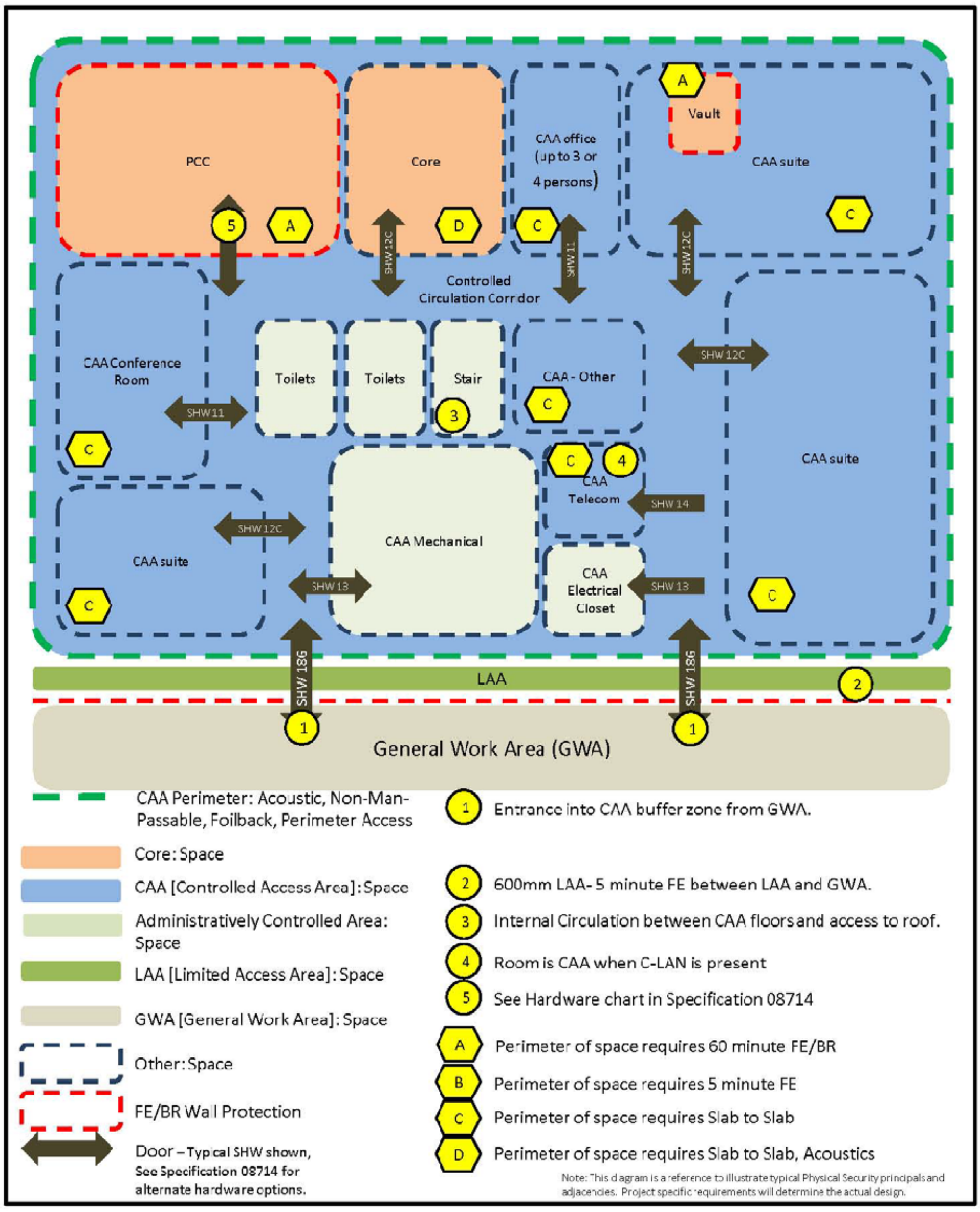


Office Buildings Protected Spaces Diagrams
Figure 422.2.5.E - Lock and Leave CAA

**422.2.5.2 15-Minute FE/BR Protection.** Provide 15-minute FE/BR protection at the following areas:

**422.2.5.2.1 Chancery or Consulate Requirements**

1. Main Lobby: Around the interior perimeter of the Main Lobby, including the floor and ceiling, to separate the PAA from the GWA. Between the main lobby and the Consular Section, when the consular entrance is via a shared lobby. Lobby slabs on grade are not required to meet the 15-minute FE/BR hardline criteria. When used here, this protection is known as the "primary hardline."

2. Separate Consular Entrance. Around the interior of the Consular entrance and waiting areas, including the floor and ceiling, to separate the PAA from the GWA. Slabs on grade are not required to meet the 15-minute FE/BR hardline criteria. This is also known as the "primary hardline." Refer to Figure 422.2.5 for example of location and hardline requirements for Consular Waiting in a SED NOB.

3. Service Entrance: Around the interior of the Service Entrance, including the floor and ceiling, to separate the PAA from the GWA. Slabs on grade are not required to meet the 15-minute FE/BR hardline criteria. Refer to Figure 422.2.5 for example of location and hardline requirements for the Multi Purpose Room in a SED NOB.

4. Multi-Purpose Room: Around the entire Multi-Purpose Room (with all of its sub-divided areas), including the floor and ceiling, to separate the PAA from the GWA. Slab on grades are not required to meet the 15-minute FE/BR hardline criteria. Provide 15-minute FEBR door between Multi Purpose Room and General Work area.

5. MSG Booth(s): Around the entire MSG Post 1, and other MSG Posts (when applicable), including the floor and ceiling. A slab on grade is not required to meet the 15-minute FE/BR criteria.

6. Interview Room: Around the entire Interview Room, including the floor and ceiling. A slab on grade is not required to meet the 15-minute FE/BR criteria.

7. Break and/or Change Rooms with exterior access: Around the entire Break and/or Change Room suite, including the floor and ceiling. A slab on grade is not required to meet the 15-minute FE/BR criteria.

**422.2.5.2.2 Sole Occupant Requirements.** There are different requirements for security partitions at Sole Occupant buildings, only one of which will apply at a particular post. The following criteria will apply unless otherwise noted.

1. Main Lobby: Around the interior perimeter of the Main Lobby, including the floor and ceiling, to separate the PAA from the GWA. Between the main lobby and the Consular Section, when the consular entrance is via a shared lobby. Lobby slabs on grade are not required to meet the 15-minute FE/BR hardline criteria. When used here, this protection is known as the "primary hardline."

2. Separate Consular Entrance. Around the interior of the Consular entrance and waiting areas, including the floor and ceiling, to separate the PAA from the GWA. Slab on grade are not required to meet the 15-minute FE/BR hardline criteria. This is also known as the "primary hardline."

3. Service (Secondary) Entrance: Around the interior of the Service Entrance, including the floor and ceiling, to separate the PAA from the GWA. It is intended that the service entrance and secondary staff entrance be located together so that they share the access control facilities. Slabs on grade are not required to meet the 15-minute FE/BR hardline criteria.

4. Multi-Purpose Room: Around the entire Multi-Purpose Room (with all of its sub-divided areas), including the floor and ceiling, to separate the PAA from the GWA. Slab on grades are not required to meet the 15-minute FE/BR hardline criteria. Provide 15-minute FEBR door between Multi Purpose Room and General Work area.

5. MSG Booth(s): Around the entire MSG Post 1, and other MSG Posts (when applicable), including the floor and ceiling. A slab on grade is not required to meet the 15-minute FE/BR criteria.

6. Safe Area: Around the entire perimeter, including the floor and ceiling, of the safe area(s).

7. Protected Generator: Around the entire perimeter, including the floor and ceiling, of the protected generator. A slab on grade is not required to meet this requirement.

8. Protected Generator Equipment: Around the entire perimeter, including the floor and ceiling, of areas housing automatic transfer switch (ATS) or other critical equipment for the protected generator. A slab on grade is not required to meet this requirement.

**422.2.5.2.3 Storage Vaults.** Around the entire area of storage vaults, such as the Pouch Vault, including the floor and ceiling. A slab on grade is not required to meet the 15-minute FE/BR criteria.

**422.2.5.2.4 Annex Building (NOX and Support GSO).** The following applies to Chanceries or Consulates only, and not to Sole Occupants.

**422.2.5.2.4.1 Entrance Lobby(s).** Around the interior perimeter, including the floor and ceiling, of entrance lobbies of annex buildings housing the following functions, to separate the PAA from the GWA. Lobby slabs on grade are not required to meet the 15-minute FE/BR hardline criteria. The requirement for a PAC in an annex is dependent on whether the functions located in that building receive public visitors.

1. General Services Offices (GSO)

2. Facility Management Offices (FMO)

3. Other functions that receive public visitors

**422.2.5.2.4.2 Guard Booth(s):** Around the entire Post 1, and other Guard posts (when applicable), including the floor and ceiling. A slab on grade is not required to meet the 15-minute FE/BR criteria.

**422.2.5.2.4.3 Exempt Annexes.** Annexes that contain only the following areas are exempt from the requirement for a hardline: GSO Shops, Motor Pool Service Area, Locker Rooms, Local Guard Change Rooms, and Storage Buildings such as the Warehouse.

**422.2.5.2.4.4 Safe Area.** Around the entire perimeter, including the floor and ceiling, of the safe area(s) in annex buildings housing two or more of the following functional areas: CLO, Health Unit, APO, Commercial Travel, Commercial Bank, Motor Pool Offices, Local Guard Offices, Cafeteria, Commissary Store and Offices, Drivers' Break Room, Warehouse Offices, GSO Offices, FMO, and US Agency for International Development

**422.2.5.2.4.5 Protected Generator or Uninterruptible Power Source.** Around the entire perimeter, including the floor and ceiling, of room housing emergency power source serving the safe area only.

1. A slab on grade is not required to meet this requirement.

2. The uninterruptible power supply source may be located within the safe area shall comply with this requirement.

**422.2.5.2.4.6 Protected Generator Equipment.** Around the entire perimeter, including the floor and ceiling, of areas housing automatic transfer switch (ATS) or other critical equipment for the protected generator serving the safe area only. A slab on grade is not required to meet this requirement.

**422.2.5.2.4.7** Commissary Around the entire perimeter including the floor and ceiling. A slab on grade is not required to meet this requirement.

**422.2.5.3 15-Minute FE Protection**

**422.2.5.3.1 Chancery or Consulate Requirements.** Except for unique circumstances, 15-minute FE protection is not used in Chancery or Consulate office buildings.

**422.2.5.3.2 Sole Occupant Requirements.** There are different requirements for security partitions at Sole Occupant buildings, only one of which will apply at a particular post. The following criteria will apply to some, but not all, posts. OBO will provide instructions for each project regarding when these criteria apply.

1. Main Lobby: Around the interior perimeter of the Main Lobby, including the floor and ceiling, to separate the PAA from the GWA. Between the main lobby and the Consular Section, when the consular entrance is via a shared lobby. Lobby slabs on grade are not required to meet the 15-minute FE hardline criteria.

2. Separate Consular Entrance. Around the interior of the Consular entrance and waiting areas, including the floor and ceiling, to separate the PAA from the GWA. Slabs on grade are not required to meet the 15-minute FE hardline criteria.

3. Service Entrance: Around the interior of the Service Entrance, including the floor and ceiling, to separate the PAA from the GWA. Slabs on grade are not required to meet the 15-minute FE hardline criteria.

4. Multi-Purpose Room: Around the entire Multi-Purpose Room (with all of its sub-divided areas), including the floor and ceiling, to separate the PAA from the GWA. Slab on grades are not required to meet the 15-minute FE hardline criteria. Provide 15-minute FE door between Multi Purpose Room and General Work area.

5. MSG Booth(s): Around the entire MSG Post 1, and other MSG Posts (when applicable), including the floor and ceiling. A slab on grade is not required to meet the 15-minute FE criteria.

**422.2.5.4 5-Minute FE Protection**

**422.2.5.4.1 Chancery or Consulate Requirements.**

1. Information Resource Center (IRC): Around the interior of the IRC to separate the PAA from the GWA. Provide 5-minute FE door between IRC Room and General Work area. Refer to Figure 422.2.5 for example of location and hardline requirements for Information Resource Center in an NOB.

**422.2.5.4.2 Sole Occupant Requirements.** There are different requirements for security partitions at Sole Occupant buildings, only one of which will apply at a particular post. The following criteria will apply to some, but not all, posts. OBO will provide instructions for each project regarding when these criteria apply.

1. Main Lobby: Around the interior perimeter of the Main Lobby, including the floor and ceiling, to separate the PAA from the GWA. Between the main lobby and the Consular Section, when the consular entrance is via a shared lobby. Lobby slabs on grade are not required to meet the 5-minute FE hardline criteria.

2. Separate Consular Entrance. Around the interior of the Consular entrance and waiting areas, including the floor and ceiling, to separate the PAA from the GWA. Slabs on grade are not required to meet the 5-minute FE hardline criteria.

3. Service Entrance: Around the interior of the Service Entrance, including the floor and ceiling, to separate the PAA from the GWA. Slabs on grade are not required to meet the 5-minute FE hardline criteria.

4. Multi-Purpose Room: Around the entire Multi-Purpose Room (with all of its sub-divided areas), including the floor and ceiling, to separate the PAA from the GWA. Slab on grades are not required to meet the 5-minute FE hardline criteria. Provide 5-minute FE door between Multi Purpose and General Work Area.

5. MSG Booth(s): Around the entire MSG Post 1, and other MSG Posts (when applicable), including the floor and ceiling. A slab on grade is not required to meet the 5-minute FE criteria.

6. Information Resource Center (IRC): Around the interior of the IRC, to separate the PAA from the GWA. Provide 5-minute FE door between IRC and General Work Area..

**422.2.5.5 Non-Man-Passable Hardline.** Non-Man-Passable (NMP) (also known as "secondary") hardlines are used when there is a public area located behind the primary hardline. Provide a NMP hardline including laminated glazing 12 mm thick at the following areas:

1. Consular Entrance: At all occupancies; around the interior of the Consular entrance and waiting areas, to separate the PAA from the GWA. This is only applicable if OBO has instructed the Contractor that a separate Consular Entrance is not required. See Section 422.2.1.1 for the usual Consular hardline requirement.

2. A DS Approved non-man passable barrier system to provide office staff protection is required. Door openings must utilize SDI level 4 maximum duty doors and windows with aluminum or steel frames, minimum 6 mm laminated glazing with 25 mm bite.

   OR

   Door openings must utilize SDI level 4 maximum duty doors and windows with minimum 6 mm laminated glazing.

   Utilization of the above criteria is to be determined by OBO on a project specific basis.

**422.2.5.6 Secure Room** Secure Rooms are typically used for CAA remote storage areas, and at some conference rooms. Glazing is not permitted in a secure room partition. Provide Secure Rooms at the following locations:

1. Any CAA remote storage room: Around each entire room.

2. Office D: See Office D specific requirements.

3. See the classified contract attachments for additional requirements.

4. The requirements of this section are based on the assumption that there will be an MSG or a 24-hour cleared American guard present in the building. If this is not the case for a particular project, changes may be required, and OBO will provide revised instructions regarding the application of Secure Rooms.

**422.2.5.7 Controlled Access Area.** Provide slab-to-slab wall construction surrounding each individual CAA suite. See also the classified contract attachments for further CAA requirements.

**422.2.6 Doors.**

**422.2.6.1 Security Rating.** When doors are provided in walls that require a specific level of security partition, match the rating of the partition. For instance, a 15-minute FE/BR wall requires a 15-minute FE/BR door. For NMP walls, provide hollow metal doors. For Secure Rooms and at CAA/Non-CAA boundary, provide hollow metal doors. For PCC, provide a GSA Class V vault door with a ballistic backplate (DOS Code 2133). For pouch vault door provide GSA Class V vault door.

**422.2.6.2 Door Swings.** Provide a reverse bevel swing for 5-minute FE, 15 and 60-minute FE/BR, and NMP doors. For Secure Room and CAA doors, a reverse bevel swing is preferred, but not required.

**422.2.6.3 Restriction on Application of FE/BR Doors.** Restrict the use of FE and FE/BR doors that are attached to other doors, windows, or louvers. This is to prevent installation and maintenance problems on multi-product elevations. Use structural steel framing to support and anchor the FE and FE/BR doors.

**422.2.6.4 Width.** Provide a door width of not less than 1015 mm for doors located in the following spaces:

1. Loading dock, elevator vestibules, mailroom, and equipment rooms.
2. Corridors and other doors in the path between the Service Entrance (loading dock) and the PCC.
3. Within the PCC and at the PCC perimeter.

**422.2.7 Interior Glass and Glazing.**

**422.2.7.1 Type.** Provide minimum 12 mm laminated tempered or laminated heat-strengthened glazing for all interior glazing. This applies to “window-type” glazing, including glazed partitions in doors and “systems” furniture. It does not apply to glass furniture, artwork, or mirrors.

**422.2.7.2 Glazing in CAA Boundaries.** Limited use of glass partitions will be permitted in walls defining the CAA. Locate such glazing to minimize a direct line of sight to desks, computers, or work areas that may contain classified information. Do not locate clerestory windows less than 2 m above floor level. Translucent glazing materials for partitions in CAA walls are acceptable. There are no security restrictions on the use of glazed walls within CAA areas, except for special areas in which glazing is not permitted. See other criteria in this section.

**422.2.7.3 Skylights.** Skylights are not permitted in CAA office areas when the outside area contiguous to or overlooking the skylight is accessible to unescorted LES or uncleared American personnel.

**422.2.7.4 Not Permitted.** Glazing is not permitted in the following types of security partitions:

1. Secure Rooms.
2. Vaults.
3. Areas requiring 60-minute FE/BR protection.

**422.2.7.5 Security Rating.** When glazing is provided in walls that require a specific level of security partition, match the rating of the partition. For instance, a 15-minute FE/BR wall requires 15-minute FE/BR

glazing. For NMP walls, provide 12 mm minimum thick polycarbonate laminated to heat-strengthened or tempered glass on both sides. For CAAs, do not use glazed doors.

**422.2.7.6 Furniture and Artwork.** The use of glass furniture and artwork (such as sculptures) must be approved by OBO. Glass furniture and artwork must be coordinated with the blast consultant during the design to ensure that a hazard is not created in the event of a blast.

**422.2.7.7 Glass railings.** The use of exterior glass railings must be approved by OBO when used on balconies or terraces. Glass railings must be coordinated with the blast consultant during the design to ensure that a hazard is not created in the event of a blast.

**422.2.8 Mechanical/Plumbing/Fire Protection/Electrical Systems** The following requirements apply to all mechanical, electrical, plumbing, fire protection, telecommunications, and any other utilities or services:

**422.2.8.2 Acoustic Protection.** Where utilities or services cross partitions that have acoustic requirements, provide sound protection to meet the acoustic requirement. This acoustic treatment is in addition to the physical protection required for the utility penetration. See contract attachments for acoustic requirements.

**422.2.8.3 Location of Services.** Design and locate services to prevent intentional misuse of, damage to, and removal of the services by unauthorized persons. Locate vital equipment to minimize damage or destruction from terrorist attack.

**422.2.8.4 Unauthorized Personnel.** Design services to deny access to the facility by unauthorized personnel.

**422.2.8.5 Metering.** Where utilities must be metered, and where permitted by utility company and local authorities, locate meters and meter valves in secure areas inside the perimeter wall, with remote readers in an accessible location outside the building.

**422.2.8.6 CAA** , locate equipment such as vertical shaft , elevators, machine rooms, utility rooms, chase, telephone frame rooms, electrical closets, ductwork serving CAA spaces in non-CAA spaces, except for terminal units. Provide key-controlled access for maintenance personnel only. See Section 422.2.4 for restrictions on locating service equipment in areas adjacent to, above, or beneath CAA spaces. For the existing building, comply as stated above to the maximum extent possible.

**422.2.8.7 Penetrating Specific Spaces.** Service and equipment may not be installed within or pass through the following space(s) unless it specifically services that space:

1. PCC.
2. Suite A of the PCC.
3. Suite B of the PCC.
4. Suite C of the PCC.

5. CTF.

6. Type II Conference Rooms.

7. Office D.

8. Unclassified Computer Room(s).

**422.2.8.8 Protection of Penetrations.** Provide protection for penetrations in security partitions to maintain the integrity of the wall protection. See OBO-ICS IBC Appendix N (The Physical Security Detail Handbook) for generic details. Customized details may be required to provide adequate protection for the design.

**422.2.8.8.1 Routing of Systems.** Route the systems to minimize the locations where systems cross security partitions. This includes penetrations through floors and ceilings in areas where physical protection is required.

**422.2.8.8.2 Physical Protection**

1. Forced Entry: Where a partition requires a specific level of FE protection, the penetration must provide that same level of FE when the opening size is greater than or equal to 620 sq cm and one dimension is greater than 150 mm. The only way to achieve 60-minute FE protection is to use a DOS certified FE/BR 60-minute louver.

2. Ballistic Resistance: Where a partition requires ballistic protection, the penetration must also provide ballistic protection. Above drop ceiling; provide a 6 mm plate on either side of the wall/slab for 15 minute FEBR penetration. For safe haven, 60 minute FEBR wall, penetration below drop ceiling and vertical penetration, 6 mm plate is required on both sides. This is applicable at all penetrations where the gap between the hardline wall being penetrated and the item penetrating it exceeds 6mm, regardless of utility size.

3. PCC: When a penetration is sized between 161 – 619 sq cm, provide 15-minute FE grilles. Provide 60-minute FE protection for openings larger than 619 sq cm. Provide ballistic protection for all penetrations.

4. NMP Partitions: Provide 5-minute FE grilles at NMP partition openings when the opening size is greater than or equal to 620 sq cm and one dimension is greater than 150 mm.

5. Secure Room / CAA /non CAA and all of the core suite Partitions: Provide grilles per the "Tamper-Proof Grille" detail when the opening size is greater than or equal to 620 sq cm and one dimension is greater than 150 mm.

6. Exception to CAA Penetration Grilles: When mechanical equipment that would inhibit human penetration is located in a duct at a CAA perimeter partition, a grille is not required.

7. Inspection Port: For ducts, provide a duct inspection hatch on the secure side of the penetration.

**422.2.8.8.3 Access Panels, etc.** Do not place louvers, access panels, hatches, or other openings in the perimeter of CAA suites, secure rooms, vaults, or other areas where security requires slab-to-slab partitions.

**422.2.8.8.4 EC Room(s).** The equipment in the EC Room EC generates substantial heat, and must be provided with adequate ventilation and cooling. Do not meet this requirement by providing louvers to an adjoining room.

**422.2.8.8.5 Motion Sensors in CAA.** In the CAA, when motion sensors are used to control lights, provide only passive (non-emanating) infrared motion sensors.

**422.2.9 Building Exterior.**

**422.2.9.1 Exterior Walls.** Provide exterior walls of the office building(s) to meet Forced Entry and Ballistic Resistant (FE/BR) and blast requirements as indicated below. Refer to OBO-ICS IBC Appendix N (The Physical Security Detail Handbook) and OBO Standard Specifications for approved FE and FE/BR design standards.

**422.2.9.1.1 FE/BR Criteria.**

**422.2.9.1.1.1 Chancery or Consulate Requirements.**

**422.2.9.1.1.1.1 Office Facilities.** Provide 15-minute FE/BR protection for the exterior walls of all buildings that contain office functions. This applies within 5.0 m above grade or accessible platform. The following areas are specifically included in this category:

1. Chancery or Consulate Building
2. USAID Annex Building
3. Annexes that contain functions such as GSO Offices, FMO/FMS, CLO, Health Unit, APO, Commercial Travel, Commercial Bank, Motor Pool Offices, Local Guard Offices, Cafeteria, Commissary Store and Offices, Drivers' Break Room, and Warehouse Offices.
4. Fitness Center of NEC Recreational Facilities.
5. Enclosed swimming pools.

**422.2.9.1.1.1.2 Excluded Areas.** The following areas are specifically excluded from the requirement for exterior FE/BR protection: GSO Shops, Motor Pool Service Area, Locker Rooms, Local Guard Change Rooms, and Warehouses (with no offices; only walls excluded),

**422.2.9.1.1.2 Sole Occupant Requirements.**

1. Provide 15-minute FE/BR protection for the exterior walls that contain office function. This applies within 5.0 m above grade or accessible platform unless otherwise specified in the project-specific requirements.

**422.2.9.1.2 Blast Criteria.**

**422.2.9.1.2.1 Applicability.** Design the structural framing and exterior envelope of the office building(s), including exterior façade, walls, floors, and roofs, to withstand a bomb of a specified type and weight. The charge weight is provided in the classified contract attachments. The following areas are specifically included in this requirement:

1. Chancery or Consulate Building

2. USAID Annex Building

3. Annexes that contain functions such as GSO Offices, FMO/FMS, CLO, Health Unit, APO, Commercial Travel, Commercial Bank, Motor Pool Offices, Local Guard Offices, Cafeteria, Commissary Store and Offices, Drivers' Break Room, and Warehouse Offices

4. On-Compound Housing, including the EMR and MSGQ, unless specifically stated otherwise by OBO.

5. Fitness center for NEC Recreational Facilities.

**422.2.9.1.2.2 Excluded Areas.** The following areas are specifically excluded from the requirement for blast protection: GSO Shops, Motor Pool Service Area, Locker Rooms, Local Guard Change Rooms, Warehouses (with no offices only), enclosed swimming pools and CACs.

**422.2.9.1.2.3 Roof-Mounted Equipment.** There are no blast criteria for equipment mounted on the roof of the building.

**422.2.9.1.2.4 Utility Buildings.** There are no blast criteria for utility buildings, e.g., transformer building, separate generator building, etc.

**422.2.9.1.2.5 Active Vehicle Barriers.** Coordinate the blast design with the penetration allowed by the active vehicle barriers. See Section 422.3.4.

**422.2.9.1.2.6 Glazing.** The minimum glazing shall be laminated tempered glass or laminated heat-strengthened glass, minimum 12 mm thick (total), with a 25 mm frame bite. If insulated layups are used, the laminated portion must face the interior (protected) side of the building.

**422.2.9.2 Construction of Exterior Windows.** Provide an equivalent level of protection as is required for the walls for exterior windows of the building. FE and BR protection applies to areas within 5.0 m above grade or accessible platform. See Section 422.2.9.1. Refer to OBO-ICS IBC Appendix N (The Physical Security Detail Handbook) for approved 15-minute FE/BR products. There is no limit on the amount of fenestration that may be provided in the building, as long as the performance requirements are fully met.

**422.2.9.3 Exterior Doors and Openings.** Provide an equivalent level of protection as is required for the walls for exterior doors and non-window openings of the building. This applies to areas within 5.0 m above grade or accessible platform. See Section 422.2.9.1. Refer to OBO-ICS IBC Appendix N (The Physical Security Detail Handbook) for approved 15-minute FE/BR products.

**422.2.9.4 Courtyards.** A courtyard is considered to be protected when it is surrounded by occupied space where the exterior walls are higher than 5.0 m above grade or accessible platform. Provide the same FE/BR protection as the other exterior walls of the building for any courtyard that is not protected. Design all courtyards, regardless of whether they are protected or not, for the specified blast requirements applicable for that building.

**422.2.9.5 Roofs.**

1. Provide FE and BR protection for roofs as required for the areas in which they are located (e.g., a roof that is sufficiently high to be considered "non-accessible" does not require FE/BR protection). However, certain roof areas require FE and/or BR protection based the requirements of the space underneath. Provide the same level of protection for the roof as the space underneath requires.

2. Provide blast protection for roofs per Section 422.2.9.1.2.1.

3. Provide a controlled roof area above the PCC and Office D suites. At certain posts, a controlled roof may be required above the entire Controlled Access Area. Refer to the classified criteria for Zone of Control, and to Section 14.2.5.5 for Blocking and Stacking Criteria for further information.

4 Provide DS lock and door monitor for any access to roof areas in buildings containing offices.

5. A roof containing both 'areas of restricted space above CAA' and 'areas above the GWA' shall be separated by a 2.75 meter anti-climb fence. This is to allow non-cleared workers to work on the roof on the non-restricted space of the roof.

**422.2.9.6 Façade.** Avoid creating climbable elements, particularly within the lowest 5 m above grade. Provide a smooth façade, e.g., free of handholds and footholds, to the maximum extent possible. Slope window sills and window and door coverings/treatments so as to not create a climbable element.

**422.2.9.7 Weather Vestibules.** When a weather vestibule is provided, it is to be treated as part of the building, and not as a "blow-away" appendage. The weather vestibule must meet setback, blast, and other security requirements for the exterior of the building.

**422.2.9.8 FE/BR Window Walls.** Restrict the use of FE/BR products in windows walls and large expanses of glazed areas to those areas located only within 5.0 m above grade or accessible platform. Coordinate the design and appearance of large glazed areas with all the disciplines involved, including but not limited to: architect, blast, security, installation, maintenance, and glazing fabricator/supplier.

**422.2.9.9 Exterior balconies:** Upper-level exterior balconies and terraces are permitted, so long as they are located higher than 5.0 m above grade or accessible platform. However, when an upper-level balcony or terrace is located within two stories of grade or accessible platform, then one of the following requirements apply. These requirements apply only to balconies or terraces which are sized to

accommodate more than three people. . Ensure all egress requirements are provided without entering to more secure area.

**Maximum occupant load.** Occupant load at any exterior balcony is limited to no more than 49 occupants.

1. Provide 5-minute FE doors at the balcony or terrace. Provide windows which provide protection equivalent to UL 972 for Burglary Resisting Glazing Material. This is in addition to the blast requirements stated above. 30 meter blast windows are acceptable for balconies requiring UL 972 or 5 minute FE windows.

**-- OR --**

2. Provide 15-minute FE/BR doors and windows at the balcony or terrace.

   Utilization of the above criteria is to be determined by OBO on a project specific basis.

**422.2.9.1 Glass railings at exterior balconies.** Exterior glass railing systems shall be designed and constructed to prevent glass or supports from becoming secondary fragments in the event of a blast.

**422.2.10 Lock and Leave Facility.** When a facility is identified as "Lock and Leave" (L&L), the requirements of Section 422.2.10 shall apply, along with other requirements in the OBO-ICS. Refer to OBO-ICS IBC Section 424 for technical security requirements for Lock and Leave facilities.

**422.2.10.1 Exterior Doors.** The L&L Facility shall have two exterior doors resigned to facilitate the "Lock and Leave" function. The first is a special access (SA) door and the second, a bypass door.

1. An L&L facility shall have one door designated as the SA door for use after office hours. This door will be the last point of exit/initial point of entry of the Chancery building. Locking hardware for this door is identified in OBO-SPEC Section 08714, "Door Hardware" as SHW-18 (opaque door) or SHW-18A (transparent door).

2. A separate bypass door shall be provided to ensure access in the event of an electrical or mechanical lockout of the L&L door. Locking hardware is identified in OBO-SPEC Section 08714 as SHW 18B, Modified Emergency Exit/L&L Bypass door. The L&L Bypass Door has the following minimum-security hardware with external key cylinders.

| Catalog# | Model# | Hardware# |
|---|---|---|
| LOK678 | 4440-GCI/4450 | Knox Box Mini –Vault w/S&G 8500 Series Lock |
| LOK368 | V70600RC332 | ASSA 626-F dead bolt, 2 ¾" backs, w/Drive –in –bolt |
| LOK370 | V70600-332/51 | ASSA 626 Removable Core |
| TBD | TBD | Magnetic Lock Bypass Switch |
| TBD | TBD | Card Reader (for recording only; not to operate door) |

3. A fire exit may also function as the Bypass Door. Locking hardware is identified in OBO-SPEC Section 08714 as SHW 18B, Modified Emergency Exit/L&L Bypass door.

4. All exterior forced entry (FE) doors must have the door Manufacturer's threshold plate installed and be in accordance with the manufacturer's specifications.

5. Facilities with non–FE exterior doors shall be secured with a DS-approved 25.4 mm throw deadbolt, or equivalent device.

6. The exterior removable cores of the forced entry locks on the Bypass Door shall be keyed differently with no master or grandmaster key.

**422.2.10.2 Interior Doors.**

1. Interior building door of office (item whose compromise or loss will severely impact post operations (e.g., PC system personal or payroll data, safes containing funds, etc.) must be monitored. Door must be fitted with automatic closers.

2. The exterior removable cores of the forced entry locks on the technical equipment room door shall be keyed differently with no master or grandmaster key.

**422.2.10.3 Areas of Control.**

1. An L&L facility shall establish a U.S. control area of at least 600 mm between the CAA and the general work areas. This area shall be identified as a limited access area (LAA). The perimeter wall of the LAA shall provide slab-to-slab construction with 5- minute force entry protection. The LAA door shall be a 5-minute forced entry (FE) door with external key way forced entry locks, and the keys stored in an adjacent DS- approved lock box.

2. Where post communications centers (PCCs) do not exist, the core area where the classified server, encryption equipment, and keying material are secured shall be constructed to a minimum 15- minute force entry/ballistic resistance (FE/BR) protection with a GSA -approved Class 5 Vault.

3. Where PCCs exist, constituted by one or more parties normally housing PCC, PCC standards in other portions of the OBO-ICS and in other OBO standard documents apply.

4. In addition to the CAA standards, the perimeter wall of the CAA must meet secure room construction. A typical detail of a secure wall is found in the OBO-ICS IBC Appendix N (The Physical Security Detail Handbook).

**422.2.10.4 EC Room.** The EC room shall be slab-to-slab construction with an interior area of at least 14 square meters. The EC room shall have hardware identified in OBO-SPEC Section 08714 as SHW –17A hardware, and shall be monitored by the SA alarm system.

1. The alarm system control unit and the SA door access system panel shall be located in the EC room.

2. The room shall provide the necessary electrical service, and ventilation.

**422.2.10.5 Alarm System Conduit.** All wiring for L&L alarm system shall be, at a minimum, in electrical metallic tubing (EMT) conduit.

**422.2.10.6 Technical Security System (TSS).** The technical security system must be designed and installed per requirements. Refer to Section 424 TSS Systems.

**422.3 Compound Access Control (CAC) Facilities** The requirements in Section 422.3 are applicable to all new CAC facilities. For physical security associated with an office compound site, refer to Section 603 of the IZC

**422.3.1 Types of CACs.** There are four types of CACs: Pedestrian only, Vehicle only, Pedestrian-Vehicle Combined, and Service CAC. The type of CAC required for a site shall be determined by a combination of the specific program requirements and the specific site configuration. All CACs are composed of a system of gates, barriers, guard booths, and screening areas.

**422.3.1.1 Pedestrian-only CAC.** A pedestrian-only CAC consists of a sheltered area housing a local guard desk, package inspection area, Package X-ray machine, package storage, a walk-through metal detector (WTMD) and a Sub-EC Room.

**422.3.1.2 Vehicle-only CAC.** A vehicle-only CAC is designed to create an area where a vehicle will stop for screening prior to entering the compound. The CAC consists of a sheltered area housing a guard booth, equipment storage, rest room, mechanical/electrical room and Sub EC-Room, an explosives detector unit and a vehicle screening area (also known as "sally port"). Cover the sally port at posts that have adverse weather conditions such as heavy rainy seasons, significant snow, or other conditions that make it difficult to perform vehicle screening.

**422.3.1.3 Combined Pedestrian-Vehicle CAC.** A combined Pedestrian-Vehicle CAC is an amalgamation of the Pedestrian-only and Vehicle-only CACs. This CAC consists of a sheltered area housing a local guard desk, package inspection area, Package X-ray machine, package storage, WTMD, a guard booth, rest room, mechanical/electrical room and Sub-EC Room, an explosives detector unit and sally port. The guard booth is situated so that both pedestrian as well as vehicle screening can be monitored. Cover the sally port at posts that have adverse weather conditions such as heavy rainy seasons, significant snow, or other conditions that make it difficult to perform vehicle screening.

**422.3.1.4 Service CAC.** A service CAC is composed of a combined Pedestrian-Vehicle CAC with a temporary receiving area and a trash holding area.

1. Receiving Area: The receiving area consists of a building with two loading docks, one located on the compound side and the other on the public side. Space for a large X-ray machine shall be provided in the receiving building. Where required in Section C, provide the large X-ray. Provide lockable overhead doors at the street-side and compound side of the Receiving Area, and a pedestrian door on the compound side. Walls and doors of the receiving area at the compound perimeter are required to meet 5 minute FE.

2. Trash Holding Area: The trash holding area consists of an area to house the compound trash dumpsters. This area is to be enclosed with a wall, a lockable gate or roll-up door at the public side, and lockable gate or door at the compound side. Walls and doors of the Trash holding area at the compound perimeter are required to meet 5 minute FE. Since trash removal capabilities vary greatly from site to site, the Contractor must work closely with OBO and Post officials in order to develop an appropriate trash removal system.

### 422.3.2 CAC Procedural Operations

**422.3.2.1 Vehicles.** Vehicle screening occurs inside the perimeter wall. A vehicle enters the sally port through the sliding, rolling, telescoping, cantilever, or bi-fold vehicle gate in the perimeter wall. At this point, the interior vehicle barrier is in the secure position. The vehicle gate will then be closed, and the vehicle is inspected. Inspection generally comprises verification of the vehicle identification; verification of the vehicle occupant's identification; an explosives detection screening; and a check of the vehicle interior, undercarriage, engine compartment, trunk, and gas-fill cover area. The undercarriage inspection is conducted using a hand-held mirror device. Passengers may be required to exit the vehicle and be screened and badged inside the CAC. After the vehicle is inspected, the interior vehicle barrier is released, allowing passage of the vehicle. This barrier is re-secured prior to another vehicle entering the compound.

**422.3.2.2 Pedestrians.** Pedestrians enter the CAC through a door in the perimeter wall. A local guard sitting at a desk, who will perform an inspection, greets them. The inspection typically consists of using an x-ray machine to monitor personal belongings, and a WTMD to monitor the person him or herself. The inspection may also consist of a manual check of belongings. The guard will then check and temporarily store items not permitted on the compound. Visitors may also receive a badge at the CAC, and may have to wait for an escort prior to entering the compound. Upon leaving, pedestrians will exit via the CAC, stopping to return badges and retrieve personal belongings. Occasionally, pedestrians may wait in the CAC for taxis.

**422.3.2.3 Deliveries.** It is intended that commercial deliveries be made at the Service CAC, with the non-secure vehicle parking at the exterior loading dock. Packages are brought into the Receiving Building, where they will be x-rayed prior to being transported to an official vehicle and delivered to the warehouse or to their final destination within the compound. Packages may also be temporarily stored in the Receiving Building.

**422.3.2.4 Trash.** The trash area shall be accessed from within the compound for Post use, and from the exterior, for trash company use.

### 422.3.3 Specific Design Requirements

#### 422.3.3.1 Sally Port

1. Canopy: When at a post that has adverse weather conditions, e.g., a severe rainy season, heavy snow, etc., provide a canopy over the sally port to shield the screening process from the elements. Design the canopy so it does not trap vehicle fumes or interfere with CCTV coverage, and provides adequate height clearance for the largest common vehicle using that entrance.
2. Anti-Ram Protection: Anti-ram protection is required around the interior side of the sally port, and between each of the vehicle lanes (for a multi-lane CAC). This will consist of fixed controls along the side and between lanes, with an active roadway barrier system or hydraulic bollard barricade system (DS certified system capable of operating to the secure position in 1.5 seconds or less in emergency mode) at the inner end of the sally port. Anti-ram protection is not required at the outer end of the sally port. Provide sliding, rolling, telescoping, cantilever, or bi-fold anti-climb vehicle gates at both inner and outer ends. All lanes in the sally port are required to have the capability to screen incoming vehicles.
3. Fenced Enclosure: Provide a fenced/walled enclosure (man trap) at the sally port to prevent pedestrians from accessing the compound. Provide a gate at the interior side of the sally port.

Fence enclosure is illustrated in the SED Standard Design Drawings. Enclosure must meet anti-climb standards.

A. Where there is a pedestrian gate within the fenced enclosure, access control shall be provided from within the CAC protected guard booth.

4. Gates: All vehicle gates are to be sliding, rolling, telescoping, cantilever, or bi-fold, lockable, provided with locks, and capable of being controlled remotely from within the CAC guard booth and via MSG Post 1 in the main office building. Vehicle gates that are part of the perimeter wall or fence must also meet the same height, anti-climb, and transparent/opaque requirements as the perimeter wall or fence. When a facility requires a solid perimeter wall, the use of an opaque gate is required at the perimeter of the compound. Vehicle gates on the inner side of the sallyport to the compound must be transparent so that the guard can see vehicle traffic coming and going. Gates must be interlocked so that they cannot be open at the same time. Override of this function is to be located in Post 1 or the Security Control Center (SCC).
5. Lighting: Provide illumination levels of 22 – 54 lux in the sally port. Provide in-ground uplights in the vehicle lane to assist with undercarriage inspection. Segment lighting controls to allow for individual control of each type of lighting. Locate controls in the guard booth.
6. Ice Melting: Provide in-ground ice/snow melting capability in the sally port and sidewalks surrounding the CACs when located in a heavy snow/ice environment. Coordinate design with available active anti-ram vehicle barrier manufacturers.
7. Size: Width of lane must not exceed 3.7 meters defined by lane curb and no less than 3.1 meters wide. Gate clear opening shall be, but not exceed 4.0 meters to accommodate larger emergency vehicles where applicable. A clear length of 7.5 meters must be provided to accommodate most vehicles. Specific posts may have vehicles requiring longer sallyport length that should be designed too.
8. CCTV Coverage: Provide coverage of the entire vehicle screening process and the front view of the approaching vehicle.

**422.3.3.2 Consular CAC.** The following criteria apply to the pedestrian control portion of Pedestrian-only & Pedestrian-Vehicle CACs.

1. Forced Entry & Ballistic Resistance: Provide 15-minute Forced Entry (FE) Ballistic Resistant (BR) protection at the exterior (street, or public) side, including walls, windows, doors, and other openings. Provide 5-minute Forced Entry (FE) protection at the interior (compound side) including walls, windows, doors, and other openings.
2. Anti-Climb: Maintain anti-climb protection at any wall of the CAC that constitutes the perimeter wall of the compound.
3. Anti-Ram: Maintain anti-ram protection for the sides of the CAC that constitute the perimeter of the compound. Anti-ram protection may be provided as part of the exterior CAC walls, or may be provided separately outside the CAC.
4. Storage of Personal Belongings: Design ample storage space for various sizes and types of parcels in the CAC. Since this will vary significantly from post to post, consult with OBO and Post officials to determine what is appropriate.

5. Separation of Ingress/Egress Routes: Separate pedestrian ingress and egress routes. Both ingress and egress routes require access to the local guard and package storage area.
6. Glazing (other than FE) is required to be laminated tempered glass or laminated heat-strengthened glass, minimum 12 mm thick (total), with a 25 mm frame bite. This includes glazing in doors. Windows (other than FE) are permitted to be operable.
7. Shading: Provide positive shading for windows to reduce solar glare and heat gain in the CAC. Provide overhead shading at the guard booth to reduce the impact of rain on the guard's vision outside the booth.
8. Visa Passback: Where required by the Space Requirements Program, provide one visa passback window, located at the CAC designated as the entrance for the consular section. The visa passback window should be accessed from outside the compound perimeter wall to minimize unnecessary crowding inside the pedestrian portion of the CAC. Provide 15-minute Forced Entry and Ballistic Resistant (FE/BR) protection surrounding the visa passback work area, including the ceiling.
9. Separation of WTMD: Provide a minimum of 500 mm between the WTMD and the x-ray machine, doors, or other moving metal.
10. "Outside" of Doors: For purposes of determining the "outside" of the doors, the exterior of the perimeter wall is the "outside" of the perimeter doors, and the inside of the CAC is the "outside" of the compound-side doors. This definition designates which side provides controlled access.
11. "Attack side": For purposes of forced entry protection of screening area of CAC; interior of CAC is "protected side" and street side and compound side are "attack side".
12. Turnstiles: The use of turnstiles is generally discouraged. However, there are certain circumstances under which the use of a turnstile may be circumspect, e.g., long exterior visa lines, a cultural tendency toward crowding at lines/doors, etc. The anti-climb protection must be maintained for any turnstiles that are part of the compound perimeter wall or fence. The designer must evaluate whether using a turnstile at a particular CAC is appropriate based on the local conditions.
13. Emergency Power: Provide emergency power for the pedestrian screening area, including lighting and security equipment.
14. Security Equipment: Door controls and other technical security equipment will be located in an equipment rack at the pedestrian screening area desk. The WTMD is required to have regulated power, supplied from Power Panel "ER."
15. Special Door Width: At the two compound-side CAC doors, leading from the inside of the pedestrian screening area to the compound, provide doors with a minimum clear width to allow movement of the x-ray equipment in and out of the CAC.

**422.3.3.3 Main CACs** The following criteria apply to the vehicle control portion of Vehicle-only and Pedestrian-Vehicle CACs.

1. Forced Entry & Ballistic Resistance: Provide 15-minute FE/BR protection surrounding the guard booth, including the ceiling, walls, windows, doors, and other openings and at the street side of the CAC. Provide 5 minute FE protection at all other walls, windows, doors and other openings. Provide 15-minute Forced Entry (FE) Ballistic Resistant (BR) protection at the exterior (street, or

public) side, including walls, windows, doors, and other openings. Provide 5-minute Forced Entry (FE) protection at the interior (compound side) including walls, windows, doors, and other openings of the CAC.

2. Anti-Climb: Maintain anti-climb protection at any wall of the CAC that constitutes the perimeter wall of the compound.

3. Anti-Ram: Maintain anti-ram protection for the sides of the CAC that constitute the perimeter of the compound. Anti-ram protection may be provided as part of the exterior CAC walls, or may be provided separately outside the CAC.

4. Glazing: Provide windows in the to allow guards to monitor outside activity, both on the compound and on the street/public side, as well as oversee vehicle screening in the sally port, oversee pedestrian screening in the pedestrian entry area, and control doors in the CAC. Glazing (other than FE/BR) is required to be laminated tempered glass or laminated heat-strengthened glass, minimum 12 mm thick (total), with a 25 mm frame bite. Provide positive shading for windows to reduce solar glare and heat gain in the CAC.

5. Guard Booth Specific Requirements: Provide an enclosed, environmentally controlled guard booth adjacent to the vehicle and pedestrian entrances. This booth is a separate area in which the primary vehicle access controls (perimeter gate, anti-ram barriers, perimeter doors, lighting, etc) shall be located. Remote (master) controls for this equipment shall be located in MSG Post 1. Locate the booth so that the guard has direct visual contact with the vehicle screening process, the entrance gate, the pedestrian screening process (when applicable), and any other areas under the guard's control. Provide two teller windows in the guard booth: one for communication between the guard and the sally port, and one for communication between the guard and persons outside the perimeter wall. When used at a combined Pedestrian-Vehicle CAC, provide a third teller window, located between the guard and the pedestrian screening area. Provide visual access for the guard to the outside of the perimeter wall or fence. Provide adequate space and millwork to house a telephone, computer/printer, and the security equipment.

6. Emergency Power: Provide emergency power for the guard booth, including all the equipment inside, lighting for the entire CAC and sally port, and the equipment operated from within the booth.

7. Security Equipment: Door controls and other technical security equipment will be located in the guard booth, and may also be located at the pedestrian screening area desk. The guard booth will also house an explosives detector unit. This unit consists of an automatic analyzer (size: 470 mm long x 535 mm wide x 370 mm high, weight: 19.5 kg), which will be located on a countertop. This unit is required to have regulated power, supplied from Power Panel "ER."

8 Lighting: Provide a dimmer switch for lighting in the guard booth.

**422.3.3.4 Service CAC**

Main Building Requirements: Forced Entry & Ballistic Resistance: Provide 15-minute FE/BR protection surrounding the guard booth, including the ceiling, walls, windows, doors, and other openings. Provide 15-minute Forced Entry (FE) Ballistic Resistant (BR) protection at the exterior (street, or public) side, including walls, windows, doors, and other openings. Provide 5-minute Forced Entry (FE) protection at the interior (compound side) including walls, windows, doors, and other openings. The Service CAC shall also meet the following.

1. Forced Entry & Ballistic Protection: Provide 15-minute FE/BR protection surrounding the guard

booth, including the ceiling, walls, windows, doors, and other openings and at the street side of the CAC. Provide 5 minute FE protection at all other walls, windows, doors and other openings of the CAC.

2. Receiving Building: Provide lockable 5-minute FE overhead doors at the street-side of the loading docks on the service CAC. Provide locks for the doors. When overhead door is motorized, control or override control shall be located in service CAC guardbooth.

3. Trash Area: Provide lockable gate or 5 minute FE overhead roll up door at the exterior (public) side of the trash area. When gate or overhead door is motorized, control or override control shall be located in service CAC guardbooth. Provide lockable gate or overhead roll up door at the compound side of the trash area. Provide locks for the gates.

4. Demarcation Rooms: Provide 5 minute forced entry protection at all demarcation room doors in the perimeter wall plane. Doors at these spaces require externally keyed forced entry locks. 5.Anti-Ram Protection: Maintain anti-ram protection at any wall of the CAC that constitutes the perimeter wall of the compound, including the Receiving Building. Anti-ram protection may be provided as part of the exterior CAC walls, or may be provided separately outside the CAC. At the trash area, provide anti-ram protection at the compound side, and the side adjacent to the CAC or Receiving Building. It is preferable to achieve anti-ram protection at the trash area using fixed controls (e.g., bollards, planters, elevated platforms, etc.) rather than active barriers.

6. Anti-Climb Protection: Maintain anti-climb protection at any wall of the CAC that constitutes the perimeter wall of the compound, including the Receiving Building and sally port. At the trash area, provide anti-climb protection at the exterior (public) side.

### 422.3.4 Equipment

1. Provide active anti-ram vehicle barriers and/or anti-ram gates, including all components. Refer to IZC Section 603 for design requirements for active anti-ram barriers. Motors, hydraulic equipment, etc. for the vehicle barriers are to be located in the mechanical room. Doors to the mechanical room housing the vehicle barrier equipment shall have a DS lock and shall open to the compound. Approved manufacturers are identified in a separate contract attachment. If the Contractor is permitted by OBO to use a barrier with a penetration rating other than K12, the Contractor must coordinate the authorized barrier with the blast consultant. The blast design must reflect the actual barrier penetration used.

2. Provide sliding, rolling, telescoping, cantilever, or bi-fold perimeter gates, including all components. Gates shall be heavy duty, designed for operating in adverse conditions with little maintenance.

3. Provide special equipment necessary for proper operation of active vehicle barriers and/or gates, such as pumps, heaters, or other special weather-related items.

4. Provide a Package X-ray machine for the pedestrian portion of the CACs. These machines require minimum 1625-2600 x 900 mm floor space and one dedicated 2 KVA power circuit with a floor-mounted outlet.

5. Where required in Section C, provide one Large X-ray machine for the Receiving Building at the Service CAC. This machine requires 2600 x 2450 mm floor space, a clear ceiling height of 3.2 m, and one dedicated 3 KVA power circuit with a wall-mounted outlet.

6. Provide an explosives detector unit in the Vehicle CAC guard booth. Locate on countertop closest to

the sally port. These machines require one dedicated power circuit from panel "ER".

7. Provide a Walk Through Metal Detector at PAC screening areas. These units require one dedicated power circuit from panel "ER".

**422.4 Warehouses** The requirements in Section 422.4 are applicable to a new unclassified warehouse. For physical security requirements associated with the site for an embassy office compound, refer to IZC Section 603. For physical security requirements associated with the site for a support facilities compound, refer to IZC Section 703. An unclassified warehouse is a facility under the control of the U.S.G., used exclusively as a warehouse or terminal building for unclassified material. For newly constructed or newly acquired warehouses that contain offices, the office portion of the warehouse is governed by criteria listed in Section 422.2 for NOB facilities. The warehouse-only portion of the facility is governed by criteria listed in this section.

**422.4.1 Exterior Walls.** The only security requirement for the exterior walls of warehouses is that they be capable of supporting and allowing proper anchorage of the window and door protection specified below.

**422.4.2 Exterior Windows.** Provide robust grille protection for exterior windows located within 5.0 m above grade or accessible platform. This may be achieved using 5 minute FE windows or window grilles.

**422.4.3 Exterior Doors and Openings.** Provide Steel Door Institute (SDI) level 4, maximum duty doors. Provide 5-minute FE protection at non-window openings that are 620 $cm^2$ with one dimension greater than 150 mm.

**422.**4.4 **Perimeter.** Provide 2.75 meter high perimeter wall or fence. Provide 6 meter clear zone from perimeter wall or fence inward to the compound.

422.4.5 **CES.** Provide a CES at all warehouses to accommodate entire warehouse staff.

**422.5 Housing** The requirements in Section 422.5 are applicable to new housing projects that are covered by the IBC

**422.5.1 On-Compound Housing.** Contact OBO/CRFSM/SM/SCD/SEB for requirements related to on compound housing.

**422.5.1.4 MSGQ**

1. Provide pushbutton combination lock restricted access to sleeping areas of the MSGQ.

2. Provide video intercom at front door and remote access control at the bar area or other common recreational area of the MSGQ.

3. Provide an Emergency Residential Response Room.

422.5.1.4.1 Emergency Residential Response Room (ERRR) - A dedicated room in an on compound MSGQ where weapons and equipment can be stored. This room is in addition to the REACT room with

in the Chancery or Consulate and complement its function.

1. **Room Size**: Approximately 1.6 meters x 2.5 meters minimum and sized to accommodate equipment.
2. **Room Construction:** Provide slab-to-slab Secure Room wall construction with drywall finish, non-man-passable grating for all openings larger than 620 sq.cm. Provide solid wood or hollow metal door with SHW-14 hardware.
3. **TSS:** Provide Intrusion Detection System (IDS), consisting of a door contact and PIR within the room and camera coverage and all monitored at Post One.
4. **Typical equipment:** GSA-approved class V or Class VI security weapons container with three-position combination lock sized for on M-9 9mm pistol, on M-4 carbine rifle and a standard combat load of ammunition, a set of standard issue body armor and with wall mounted hanging device for each Marine Security Guard assigned to post, one two-way portable radio and battery recharging device, one dedicated telephone line to Post One, and one clearing barrel for weapons clearing.

**422.5.1.7.1 Applicability.** There are two different requirements for residential safe areas only one of which will apply at particular post. OBO will provide instructions regarding which criteria applicable to that project.

1. When advised by OBO, provide a residential safe area in the embassy Mission Residence and or staff housing. MSGQ do not require a residential safe area.

2. Provide a residential safe area for each housing unit, with the exception of the MSGQ.

**422.5.1.7.2 Design.** For the residential area, provide slab- to slab walls of substantial construction, (concrete, masonry or brick), 5- minute FE doors. For buildings with multiple housing units, the residential safe area may be configured so that it is only located on one floor, provided that internal access to the safe are is possible from all individual residential housing units.

**422.5.2 Off-Compound Housing.** Contact OBO/CRFSM/SM/SCD/SEB for requirements related to off compound housing.

**422.6 Parking Garages** The physical security requirements in Section 422.7 are applicable to parking garages located outside the perimeter wall or fence.

1. All vehicle and pedestrian entrances shall be equipped with lockable roll up door or gate to secure the facility after business hours.
2. Guard booths shall be provided at every entrance / exit to provide visual control of vehicles and pedestrians entering facility. Refer to IZC Section 604 for requirements.

   Exception: Egress doors equipped with an approved entrance and egress access-control system in accordance with IBC Section 1008.
3. Provide an automatic parking barrier gate at every vehicular lane entering or exiting the parking garage.
4. Parking barrier gate controls shall be located in the guard booth(s).

5. Parking garage façade shall be constructed to provide a minimum of 2.10 m high of anti-climb protection (no hand or footholds). For open parking garages as defined in IBC Chapter 4, anti-climb fencing constructed in accordance with OBO-ICS IZC Appendix A may be used to meet this requirement. Refer to 422.2.9.6 for additional façade design requirements.
6. Refer to OBO-ICS IBC Chapter 12 for required illuminance requirements.
7. Refer to OBO-ICS IZC Section 603 for required clearance at perimeter wall or fence.

**Replace Section 423 with the following:**

## SECTION 423
## OTHER SECURITY REQUIREMENTS FOR OCCUPANCIES

### 423.1 Office Buildings.

#### 423.1.1 CAA.

1. HVAC equipment located inside the restricted and core areas of the CAA shall be controlled locally within each respective section of the CAA.

2. HVAC Ductwork, Piping, and Control Wiring: No ducts, control wiring, or piping shall pass into the Core or Restricted areas except to serve the particular requirements of each room/space in these areas. Piping entering or leaving the CAA shall only serve the CAA.

3. Interconnectivity: There shall be no direct inter-connectivity between the control wiring and equipment serving the CAA and controllers in non-CAA spaces. Furthermore, control circuits serving non-CAA spaces shall not traverse into CAA space. The wiring or cables shall be installed in dedicated signal conduits or telecom raceway. No central programming systems shall be permitted inside of the CAA; HVAC equipment in the CAA shall have programmable stand-alone control panels.

4. Conduits/Pipe shall not be cast in place inside the concrete.

#### 423.1.2 Classified Communications Room (CCR).

##### 423.1.2.1 Fire Detection and Notification System.

**423.1.2.1.1 Slave FACP and Sub-Slave FACP.** A separate (Slave FACP, and Sub-Slave FACP, where applicable) automatic fire detection system shall be installed in ferrous conduit with full coverage above and below ceiling levels throughout the Classified Communications Room in accordance with OSPB Standards and this chapter. Where required a Sub-Slave panel shall be installed to protect specific areas within the CCR. The Sub-Slave panels shall be interfaced with the CCR Slave FACP.

**423.1.2.1.2 Shielded Cable** must be used for the signal lines with the cable shield(s) terminated to the control panel chassis. The control panel chassis must be grounded in accordance with OSPB Standards.

**423.1.2.1.3 System Controller Power Lines** must be installed in ferrous conduit or ducting up until the point where they exit the CCR. The system may be powered from the main distribution panel (MDP) or from the most convenient power panel in those installations having sub-fed power panels.

**423.1.2.1.4 Slave Panel, Fire Detection Zone and Wire Legend.** Zones 11 and 12 are supervisory zones and DO NOT initiate the notification appliances.

| ZONE | WIRE | AREA COVERED |
|---|---|---|
| 1 | 1 | CCR Common foyer area FIRE |
| 2 | 2 | CCR Common equipment area FIRE X-w/zone 3 |
| 3 | 3 | CCR Common equipment area FIRE X-w/zone 2 |
| 4 | 4 | CPU Admin area FIRE |
| 5 | 5 | CPU ABCD Fire X-w/zone 6 |
| 6 | 6 | CPU ABCD Fire X-w/zone 5 |
| 7 | 7 | TCU Admin area FIRE |
| 8 | 8 | TCU IJKL FIRE X-w/zone 9 |
| 9 | 9 | TCU IJKL FIRE X-w/zone 8 |
| 10 | 10 | CSA FIRE |
| 11 | 11 | CSA High Temp TROUBLE |
| 12 | 12 | CCR Sprinkler valve TAMPER - Note: Signal up from MSG POST 1 |
| 13 | 13 | CCR Sprinkler discharge FIRE - Note: Signal up from MSG POST 1 |
| 14 | 14 | Main Building FIRE - Note: Signal up from MSG POST 1 |

**423.1.2.1.5 Sub-Slave Panel, Fire Detection Zone and Wire Legend.** Zone 5 is a supervisory zone and DOES NOT initiate the notification appliances.

| ZONE | WIRE | AREA COVERED |
|---|---|---|
| 1 | 1 | Parent room FIRE (Ionization detector) |
| 2 | 2 | Parent room FIRE (Photoelectric detector) |
| 3 | 3 | EFGH FIRE |
| 4 | 4 | Parent room manual evacuation pull station FIRE |
| 5 | 5 | EFGH TROUBLE |

**423.1.2.1.6 Sub-Slave to Slave FACP Operation Sequence/Interfaces** shall be edited to suit the specific project.

**423.1.2.1.7 Example of Fire Alarm Relationship.** The example below, typical of new construction projects, is provided for an operational explanation of fire alarm relationships. The sequence of operation offered here includes a Sub-Slave FACP. If a Sub-Slave FACP is not part of the CCR configuration, all references to the Sub-Slave FACP can be removed from the sequence of operation.

1. Independent FACPs with one serving as master, and others serving as slave, as follows:

2. 24 Hour/Day Manned Location, usually the Marine Security Guard (MSG) Post, Master FACP.

3. Classified Communication Room (CCR), Slave FACP.

4. Sub-Slave FACP, if applicable.

5. Slave FACP in Alarm: When the CCR Slave FACP is in fire alarm (not supervisory alarm), a specific zone is annunciated on the CCR Slave FACP, and concurrently, a signal is transmitted to a dedicated zone allocated on the Master FACP. The master, Slave, and Sub-Slave FACP's sound their audible devices. The initial Slave or Sub-Slave FACP signal shall not cause a subsequent master FACP signal to be transmitted to the slave FACP. Master FACP is capable of silencing its indicating appliances, but not Slave's or Sub-Slaves indicating appliances or is it able to reset it. The slave FACP will remain in alarm until it is reset. Upon resetting the slave FACP the master FACP will continue to register a CCR alarm indication until it is reset.

6. Master FACP in Alarm: When the Master FACP is in alarm, it shall sound its indicating appliance and concurrently transmit a signal to a dedicated zone on the Slave and Sub-Slave FACP causing the Slave and Sub-Slave FACP indicating appliance to sound. The Slave and Sub-Slave FACP will not lock into alarm and a subsequent CCR alarm signal shall not be transmitted to the Master FACP. The slave FACP indicating appliances are controlled from the Master FACP silence and reset capabilities. The Slave and Sub-Slave FACP shall not be able to silence or reset its notification appliances initiated by the master FACP.

7. Feedback Alarm: The design shall ensure that the interface of the Sub-Slave, Slave FACP to the Master FACP shall not cause a "feedback alarm" condition. When the CCR Slave or Sub-Slave FACP initiates a fire alarm sequence, a specific zone is annunciated on the CCR slave FACP, and concurrently, a dedicated zone is activated on the master FACP. Both Master, Slave and Sub-Slave FACP's will sound their audible devices. Slave or Sub-Slave FACP signal shall not cause a subsequent master signal to be transmitted back to either the Slave or Sub-Slave FACP. When the Master FACP initiates a fire alarm sequence, the Slave and Sub-Slave FACP will not lock into alarm, only its indicating appliances will operate. Master FACP signal shall not cause a subsequent Slave or Sub-Slave FACP signal to be transmitted back to the master FACP.

8. By-Pass Switch shall be interfaced with each shunt-trip breaker which will disable the ability of fire alarm control panel to activate the shunt-trip breakers in the event system malfunctions (nuisance alarms) should occur.

9. Water Flow Device for each zone shall be connected to the individual fire zone at the main building fire alarm control panel and monitored at the CCR Slave fire alarm control panel.

10. Shutoff Valve: The area's system shutoff valve shall be monitored by a tamper device connected to a supervisory zone at the main building fire alarm control panel and monitored by a supervisory zone at the CCR Slave fire alarm control panel. Both devices shall be installed on the sprinkler system piping prior to penetration into the CCR area.

11. ABCD Rooms: A separate initiating device and indicating appliance will be installed in the ABCD rooms and interfaced through isolators and connected to the CCR Slave fire alarm panel, with the exception of the EFGH monitored by the Sub-Slave FACP. Fire alarm conditions shall be annunciated inside the ABCD by a chime with strobe light.

12. UPS: Where the CCR is serviced by an Uninterrupted Power Source, The FACP shall derive its power from the power service provided by the UPS.

**423.1.2.1.8 Fire Protection of Electronic Equipment Areas.** Provide with automatic fire sprinkler and fire detection protection. This protection shall consist of wet pipe automatic sprinklers and smoke and heat detection.

**423.1.2.1.9 Fire Detection Wiring External to the CCR.** Fire detection system wireline shields will not be continued into or out of the perimeter of the CCR secure area. These shields must be broken and grounded where they enter/leave the CCR perimeter. Additionally, for six-sided shielded enclosures, these wirelines will be filtered or optically isolated before entering or leaving the CCR secure perimeter.

**423.1.2.10 Fire Detection System Signal Lines** required to be connected to remote control panel(s) outside the CCR will have these signal lines routed to the remote location in ferrous conduit with the conduit having a non conductive insert installed to electrically isolate the conduit after it enters or before it leaves the CCR secure perimeter.

**423.1.2.11 Automatic Sprinkler System.** Provide for enclosures greater than 29.75 sm (12'x24') require interior fire suppression system coverage using sprinkler fittings referenced in NFPA 13. Sprinklers are to be rated at 74 degrees C for all areas except in conditions noted in NFPA 13. Sprinkler Branch servicing the CCR shall not traverse the area to serve other portions of the building. Ordinary Hazard Group I Occupancy Classification shall be used.

**423.1.3 PCC.** Refer to Attachment J.2.1.2.

**423.1.4 Parent Room of Enclosures.**

1. Fire Protection System: A Sub-Slave FACP shall provide fire protection of parent room enclosures. Initiating devices shall provide coverage within the enclosure and be monitored by the Sub-Slave FACP. Coverage shall include areas above and below false ceilings utilizing alternating photoelectric and ionization detectors, and manual evacuation pull stations at points of egress. Proper interface between the CCR FACP and the CCR-Slave FACP shall ensure transmission of fire alarm signals during a fire emergency condition from anywhere in the facility. The FACP signals shall be transmitted through the parent room enclosure via fiber optic assembly and converted to hardwire circuitry in the parent room and enclosure. The equipment and equipment locations shall be in compliance with DS and OBO/CFSM/SM criteria.

**423.1.5 Enclosures.**

1. Fire Protection System: Provide automatic sprinkler coverage within enclosures when enclosure is greater than 26.75 $m^2$.

**423.1.6 Mail Facilities.**

**423.1.6.1 Mail Screening Facilities.** The screening facility shall consist of two rooms; the initial screening area and the secondary screening area for opening suspect mail. The initial screening area will be occupied when mail is delivered and screened. The secondary area will normally be unoccupied. This secondary

screening area shall be accessed only through the initial screening area. The secondary area shall be divided from the initial screening area by one wall with a door having a swing into the initial screening area. The secondary area shall be exhausted by a 100 percent exhaust Class I biological safety cabinet (with an integral High Efficiency Particulate Air (HEPA) filter and dust proof light) that has a nominal 0.9 m wide opening and a minimum face velocity of 0.5 m/s. A light switch, located in the initial screening room, shall simultaneously activate the exhaust fan for the biological safety cabinet and the room light(s) serving both the initial and secondary areas. The cabinet shall be designed with either an integral exhaust fan or remote centrifugal utility exhaust fan. Digital controls shall be provided to monitor fan operation and to maintain a constant face velocity across the filter face. The exhaust fan for the biological safety cabinet shall draw air from the initial screening area through the secondary area and cabinet to the exterior roof of the building. The Mail Screening Facility shall be finished with seamless resilient flooring having sanitary radius cove at the intersection of the floor and walls. Walls and ceiling shall be finished with washable semi-gloss or gloss enamel paint. The size of the Mail Screening Facility will typically not exceed a nominal size of 6m long x 2.5m wide x 2.5m high (modular transportation container), of which the secondary room shall be a nominal size of 1.85 m long x 2.5 m wide. Each room shall be provided with a laboratory quality countertop the full length of each room's longest wall.

**423.1.6.2 Modular Mail Screening Facilities.** Locate modular mail screening facilities adjacent to the Service CAC, opposite the pedestrian screening facility, adjacent to the perimeter wall. If this location is not feasible, due to site specific conditions, then locate facility as per OBO direction, but not within the 6 meter clear zone at the compound perimeter.

**423.1.7 Physical Security Requirements for Distributed Presence Facilities.** See OBO Design Standards for current matrices.

**Replace Section 421 with the following:**

SECTION 424
**TECHNICAL SECURITY REQUIREMENTS FOR OCCUPANCIES**

**Add the following Section:**

**424.1 General**. Technical Security Systems (TSS) systems are required for new DOS overseas compound facilities in accordance with Table 424.1:

TABLE 424.1, TECHNICAL SECURITY SYSTEM LOCATIONS

| | Elec Infrastr (Section 424.3.1) | | Deterrent Systems (Section 424.3.2) | | | | Detection Systems (Section 424.3.3) | | | | Response Systems (Section 424.3.4) | | | | SMSe (Section 424.3.5) |
|---|---|---|---|---|---|---|---|---|---|---|---|---|---|---|---|
| Application to Spaces (Section 424.2) | Elec Cabinet | Eqpt Rack | CCTV - All | Chemical Dispensing | Veh. Barrier Controls | Door Controls | IDS | WTMD | X-Ray | Trace Detector | ENS | IDNS | Duress | Security Intercom | |
| NOB - All | | | X | | | X | X | | | | X | X | X | X | X |
| Main Lobby | | | | X | | | | X | | | | | | | |
| Post 1 | | X | | X | X | | | | | | | | | | |
| Main EC Rm | X | X | | | | | | | | | | | | | |
| Consular | | | | X | | | | X | | | | | | | |
| Save Haven | | X | | | | | | | | | | | | | |
| Service Entry | O | O | | | | | | O | | | | | | | |
| | | | | | | | | | | | | | | | |
| NOX - All | | | X | | | X | X | | | | X | X | | X | |
| Lobby | | | | | | | | X | | | | | X | | |
| Guard Booth | | X | | | | | | | | | | | X | | |
| Sub-EC Rm | X | X | | | | | | | | | | | | | |
| Safe Haven / Safe Area | | | | | | | | | | | | | | | |
| | | | | | | | | | | | | | | | |
| Main CAC - All | | | X | | | X | X | | | | X | X | | X | |
| Guard Booth | | X | | | | | | | | X | | | X | | |
| Veh. Screen | | | | | X | | | | | | | | | | |
| Ped. Screen | | | | | | | | X | X | | | | X | | |
| Sub-EC Rm | X | | | | | | | | | | | | | | |
| | | | | | | | | | | | | | | | |
| Cons. CAC -All | | | | | | X | X | | | | X | X | | X | |
| Ped. Screen | | X | X | | | | | X | X | | | | X | | |

| | Elec Infrastr (Section 424.3.1) | | Deterrent Systems (Section 424.3.2) | | | | Detection Systems (Section 424.3.3) | | | | Response Systems (Section 424.3.4) | | | | SMSe (Section 424.3.5) |
|---|---|---|---|---|---|---|---|---|---|---|---|---|---|---|---|
| Application to Spaces (Section 424.2) | Elec Cabinet | Eqpt Rack | CCTV - All | Chemical Dispensing | Veh. Barrier Controls | Door Controls | IDS | WTMD | X-Ray | Trace Detector | ENS | IDNS | Duress | Security Intercom | |
| Sub-EC Rm | X | | | | | | | | | | | | | | |
| | | | | | | | | | | | | | | | |
| Svc CAC - All | | X | X | | | X | X | | | | X | X | | X | |
| Guard Booth | | | | | X | | | | X | | | | X | | |
| Ped. Screen | | | | | | | | X | X | | | | X | | |
| Sub-EC Rm | X | | | | | | | | | | | | | | |
| Truck Transf | | | | | | | | | X | | | | | | |
| | | | | | | | | | | | | | | | |
| MSGQ - All | | | X | | | | X | | | | X | X | | X | |
| Main Entry | | | | | | X | | | | | | | | | |
| Bar | | | | | | X | | | | | | | X | | |
| | | | | | | | | | | | | | | | |
| Warehouse - All | | | X | | | | X | | | | X | X | | | |
| Sub-EC Rm | X | | | | | | | | | | | | | | |
| | | | | | | | | | | | | | | | |
| Rec Bldg - All | | | X | | | | | | | | X | X | | | |
| Sub-EC Rm | X | | | | | | | | | | | | | | |
| | | | | | | | | | | | | | | | |
| Pkg Struct - All | | | X | | | | X | | | | X | X | | | |
| Sub-EC Rm. | X | | | | | | | | | | | | | | |
| | | | | | | | | | | | | | | | |
| Compound Site | | | X | | | | | | | | X | X | | | |
| | | | | | | | | | | | | | | | |
| | | | | | | | | | | | | | | | |

Legend
X – Always Required.
O – Required on Site-Specific Basis

**424.2 TSS Requirements for Building Areas**.

**424.2.1 Post One.**

1. TSS Function: The Marine Security Guard (MSG) Post One serves as the central control and monitoring center for all technical security systems on a compound.

**Exception.** In unique cases, Diplomatic Security may designate a Security Control Center (SCC) which will house most of the normal MSG Post One functions, and MSG Post One will be used as a guard post only.

2. TSS Systems: TSS control and monitoring activities use the following systems:
   A. Door controls for locations such as the Main Lobby access door and office building fire door exits.
   B. CCTV remote controls, recorders and monitors.
   C. Intrusion Detection System (IDS) annunciators.
   D. Chemical dispensing systems control console.
   E. Master override controls for active vehicle barrier controls and gates.
   F. Emergency Notification System (ENS) control panels, microphones, and zone router.
   G. Imminent Danger Notification System (IDNS) annunciator panels.
   H. Duress button annunciator panels.
   I. Key management system
   J. SMSeNET
   K. Automated Access Control System

**424.2.2 Main Chancery Lobby.**

1. TSS Function: The Main Lobby serves as the Public Access Control (PAC) location for the main office building on a compound. Guards will conduct personnel screening using the following TSS systems:

2. TSS Systems: TSS screening activities use the following systems:

   1. Chemical dispensing system.
   2. Walk-through metal detectors (WTMD).
   3. Hand-Held Metal Detector (HHMD).

3. Guards shall have a duress button to contact MSG Post 1 if necessary.

**424.2.3 Consular Screening.**

1. TSS Function: Consular interior waiting area serves as the location for guards to conduct secondary screening of public. Guards will conduct screening using the following TSS systems:

2. TSS Systems: TSS screening activities use the following systems:

   1. Chemical dispensing system.
   2. Walk-through metal detectors (WTMD).
   3. Hand-Held Metal Detector (HHMD).

**424.2.4 Compound Access Control (CAC) Screening.**

1. TSS Function: Each CAC includes a screening area that serve as the location for guards to conduct initial screening of staff and public at different CAC locations along the compound perimeter. Vehicles are permitted to enter the compound normally at only one CAC facility. Deliveries of supplies are made at one of the CAC facilities using a truck transfer station; the trucks do not enter the compound at that location. Guards will conduct screening of individuals and vehicles using the following TSS systems:

2. TSS Systems: TSS Control and monitoring activities use the following systems:

    1. Walk-Through Metal Detector (WTMD) for personnel.
    2. Package X-ray machines for personnel entering compound or packages delivered to compound.
    3. Hand-Held Metal Detector (HHMD) for personnel.
    4. Trace detector devices for vehicles; see CAC Guard Booth.

**424.2.5 Compound Access Control (CAC) Guard Booths.**

1. TSS Function: Each CAC includes guard booths

2. TSS Systems: TSS control and screening activities use the following systems:

    1. Door control system.
    2. Anti-ram vehicle barrier control for CAC with vehicle entry.
    3. Trace detector device, for CAC with vehicle entry, used for screening vehicles. The device is stored in the guard booth.

**424.2.6 Additional MSG Posts.**

1. TSS Function: Additional MSG Posts may be required for larger or extended compounds. These additional MSG Posts serve as personnel screening areas.

2. TSS Systems: TSS screening activities at MSG Post One include

    1. Walk-through metal detectors (WTMD).
    2. Hand-Held Metal Detector (HHMD).

**424.2.8 Safe Havens and Safe Areas.**

1. TSS Function: Safe Havens and Safe Areas are designated portions of select buildings that serve as the control and monitoring center.

2. TSS Systems: Provide TSS control and monitoring.

**424.3 TSS Systems**. Only DS-certified components are permitted for use in TSS systems. TSS installation standards are illustrated in OBO-ICS IBC Appendix M. Requirements for Technical Security Systems include the following:

**424.3.1 Technical Security Support Systems.** See OBO-ICS NEC Article 698 for TSS electrical infrastructure requirements which are more generally integrated into compound electrical system requirements.

1. TSS Equipment Racks. Provide equipment rack in Main EC Room for SMSe controls, and for CCTV switching and recording equipment.

2. Signal Wiring.
    A. Color Coding: Color code wiring in accordance with OBO-ICS IBC App. M.

B. Labeling: Label wiring between TSS terminations and EC terminations. Labeling shall be at both ends and intermediate points.
C. Cable runs shall be continuous and without splices between equipment and EC.
D. EC Terminals: Configure in accordance with OBO-ICS IBC App. M.

3. TSS UPS (Uninterruptible Power Supply).
   A. Install UPS on primary feeder for Panel EU; see OBO-ICS NEC 698.
   B. UPS shall be electrically supplied from Panel E in sub-feed arrangement; see OBO-ICS NEC 698.

4. TSS Low Voltage Power Supplies.
   A. Locate in EC or Sub-EC Room of building served by component receiving the power.
   B. Provide IDS power supplies with batter-backup capability.

5. TSS Voltage Regulators.
   A. Install voltage requlator on primary feeder for Panel ER; see OBO-ICS NEC 698.
   B. Requlator shall be electrically supplied from Panel E in sub-feed arrangement; see OBO-ICS NEC 698.
   C. As part of "separately derived system," connect neutral conductor of voltage regulator output to local grounding electrode.

**424.3.2 Technical Security Deterrent Systems.**

1. Closed Circuit Television (CCTV) system.
   A. Coverage: Provide coverage for the following locations:
      1) CAC vehicle screening area and screening process.
      2) CAC vehicle barrier and gates.
      3) PAC personnel screening areas.
      4) Exterior FE/BR doors and roof hatches.
      5) Exterior of receiving dock doors and the delivery area.
      6) Exterior side of interior secondary FE/BR doors.
      7) On and Off-compound parking lots and parking structures including gate entry and exit points.
      8) Compound perimeter walls and fences; provide views of exterior side and top.
      9) Consular interior waiting area.
      10) Consular public walkways and exterior waiting areas.
      11) Pathway – Main CAC to NOB Lobby entrance.
      12) Multi-Purpose Room
      13) Information Resource Center (IRC)
      14) Representational – Gallery / Atrium

   B. Video Monitors: Provide monitors in the following locations:
      1) Each CAC guard booth.
      2) Consular CAC screening desk for viewing by guard.
      3) MSG Post 1.

   C. Grounding and Lightning Protection: Refer to OBO-ICS NEC Article 250. Provide protection at the following locations:
      1) On CCTV Camera Poles.
      2) On Perimeter Wall-Mounted CCTV Cameras.

3) Building-Mounted CCTV Cameras.
4) Air Terminals.

D. Recording: All CCTV camera outputs shall be recorded on DVRs which shall be integrated with SMSe.

2. Chemical dispensing system.
   A. Control console shall be installed to permit operation from MSG Post 1 only, and not by non-U.S. guard personnel.
   B. Areas covered by system dispensers shall be in direct view of MSG Post 1 or viewed by CCTV camera to facilitate actions from MGS Post 1.
   C. Install system to minimize visibility to public.
   D. Interface system with building HVAC system to initiate air ventilation shutdown upon system activation.

3. Active vehicle barrier/gate system controls.
   A. Provide remote controls at CAC guard facilities, with master override at MSG Post 1.

4. Door control system.
   A. The system shall permit the monitoring and control of security doors from MSG Post 1, from each Vehicle CAC guard booth and Consular CAC screening desk.
   B. Provide video intercom with remote release at MSGQ bar to control the MSGQ main entry door.

**424.3.3 Technical Security Detection Systems and Equipment.**

1. Intrusion Detection System (IDS).
   A. Protect the Controlled Access Areas (CAA) with an Enhanced IDS in accordance with the requirements for the applicable building operation below.
      1. Posts with Marine Security Guard presence.
         a) CAA Corridor, and work and support spaces not located within the suite(s): Provide an IDS that will connect to a control panel and keypad mounted below ceiling inside the main CAA entrance. The control panel will annunciate at MSG Post 1.
         b) CAA Suites: Provide and configure each individual suite IDS as a discrete system with its own control panel and keypad. Systems shall annunciate in MSG Post 1.
      2. Lock and Leave Posts.
         a) CAA Corridor, and work and support spaces not located within the suite(s): Provide an IDS that will connect to a control panel and keypad mounted below ceiling inside the main CAA entrance.
            i. Locate IDS camera at each CAA entrance and exit
            ii. Locate dedicated DVR for CAA cameras in EC room.

         b) CAA Suites: Provide and configure each individual suite IDS as a discrete system with its own control panel and Keypad. Systems shall act as a stand-alone system
   B. Locate Enhanced IDS devices as follows in CAA Corridor, and work and support spaces:
      1. Door Contacts
         CAA Entrance from GWA.
         Roof access
         Stair exit to GWA
         Conference room

FAX room
TDY/Growth room
Telecom room
Electrical room
Mechanical room

2. PIR (Passive Infrared Detector)
   Entrance door
   Roof access door
   Stair exit door
   Every CLAN drop/outlet
   Hallway

C. Locate Enhanced IDS devices as follows in CAA suites:
   1. Door contacts
      Perimeter doors
      Systems room
   2. PIR
      Every CLAN drop/outlet
      Perimeter doors
      Work Area

D. Locate the control units and keypads near the interior side of interior entrance door below the suspended ceiling.

E. Provide low-level alarms, without control unit and keypad throughout the compound.

2. Walk Through Metal Detector (WTMD).
   A. Provide at public screening area in each PAC.
3. X-Ray machines.
   A. Provide at public screening areas and delivery locations in CACs.
4. Trace detector units.
   A. Provide at all CACs which are used for compound vehicle access.

**424.3.4 Technical Security Response Systems.**

1. Emergency Notification System (ENS).
   A. The ENS shall cover the entire compound and provide a minimum of 15 dB SPL above ambient noise levels at all exterior locations and at all occupied interior spaces.
   B. The ENS shall include two standard audio-source modules with standard State Department messages: 'Duck and Cover' and 'Evacuation' modules, along with capacity for two additional custom modules.
   C. Speaker circuits shall be zoned to allow MSG to activate and deactivate ENS on a building-by-building, floor-by-floor basis, along with separate site zone.

2. Imminent Danger Notification System (IDNS).
   A. Provide IDNS switches and wireless transmitter pendants at each PAC and CAC.
   B. Interface IDNS with ENS to activate 'Duck and Cover' module.
   C. Mount remote activation switches and buttons in discreet location out of public view.

E. Provide switch guard to prevent accidental activation, and clearly label switch guard.
F. Configure system to allow roving guard carrying an RF transmitter pendant to trigger IDNS tone at any point on compound perimeter.

3. Duress system.
   A. Provide duress buttons in CAC and PAC guard booths and in public screening areas.
   B. Buttons shall be monitored and annunciated by alarm system annunciator in MSG Post One.
   C. Provide duress buttons at all teller and cashier windows and at Executive Suite desks.

4. Security intercom system: Provide the system types identified below.
   A. Interface of post security personnel with MSG Post 1. Locate at CAC and PAC guard posts and personnel screening areas, with master control station in MSG Post 1.
   B. CAA office suite video intercom for access control. Locate entry intercom at primary suite entrance, and control intercom at reception desk for suite.
   C. Building entrance with guard booths

**424.3.5 Security Management System Enterprise (SMSe).**

1. Install SMSe is the function controller for the entire technical security system (TSS). It is a computer-based system that provides interface with almost all TSS components.
   **Exception.** X-ray machines and explosives detector devices are not integrated into the SMSe.
2. The Automated Access Control System (AACS) is a sub-system of the SMSe. Readers shall be installed in accordance with Table 424.3.5.2.

TABLE 424.3.5.2, AACS READER LOCATIONS

| LOCATION | TYPE |
|---|---|
| NOB Entrance(s) Exterior Hardline | Card reader and PIN pad |
| NOB Entrance(s) Interior Hardline | Card reader and PIN pad |
| CAA Work Space perimeter | Card reader and PIN pad |
| CAA suite(s) (Lock & Leave only) | Card reader and PIN pad |
| EC Room | Card reader and PIN pad |

**424.4 Lock and Leave Requirements.** The Department of State addresses minimum requirements and procedures for securing buildings that do not have 24-hour American presence with a Lock and Leave Policy (L&L). Posts without 24-hour American presence include those without Marine Security Guards; guard functions are accomplished by locally-hired personnel (Local Guards). Lock and Leave requirements identified below represent variances from standard TSS requirements for new compound facilities. See OBO-ICS IBC Appendix M for TSS installation standards on certain systems. See OBO-ICS IBC Section 422.2.10 for physical security requirements for Lock and Leave facilities.

1. Each L&L facility shall have only one exterior door for exiting and initial point of entry after office hours. This door is designated as the Special Entrance door. [Commentary: The requirement facilitates the process of having the last American leaving the facility at the end of the day to lock the building and exit by L&L door with external access hardware and internal alarm system.]
2. Unclassified facilities with high-value assets require installation of separate DS-approved alarm system dedicated to L& for purpose of monitoring designated alarm points.

1. Provide alarm system with system status indicator.
2. Alarm system shall be activated and deactivated via personal identification number (PIN) or other DS-approved devices located on interior wall adjacent to Special Entrance door.
3. Position PIN pad to preclude visual compromise from building exterior.
4. Assignment of PIN pad numbers shall be random in nature and consist of five or more digits/characters. The alarm system PIN pad status indicator or other DS-approved device shall reflect system violations and required clearance with unique user acknowledgement.
5. Alarm system shall have date and time stamping to allow determination of when and how long an intrusion occurred.
6. Alarm devices shall be individually zoned or configured as separate identifiable alarm points. All building exterior doors shall be monitored by L&L alarm system.
7. Alarm system panel and Special Entrance door access system shall be located in EC room.
8. EC Room door shall be monitored by L&L alarm system.
9. Power for L&L time-elapse video and alarm system equipment shall be regulated and supported by battery backup or UPS system.
10. Provide dedicated power supply with backup battery of at least 6.5 AH for Special Entrance door when using SHW-18 or SHW-18A hardware.
11. For classified facilities, L&L alarm and door access system panels shall be tamper alarmed when possible.
12. Volumetric detectors of L&L alarm system shall be tamper alarmed.
13. Time-lapse video hardware and recording equipment is normally required, exceptions will be identified for a project.
14. Time-lapse video system shall be housed in locked DS-certified container located in CAA.

## SECTION 427
## STAFF HOUSING

**Add the following Section:**

**427.1 General.** Detached one- and two-family dwellings and multiple-single family dwellings (e.g. townhouses) not more than three stories above grade plane in height with a separate means of egress and their accessory structures shall comply with the *Residential Code of Overseas Buildings Operations* except as indicated in this section.

**Exception:** Dwellings located on-compound or that are designed to withstand blast effects shall comply with the following requirements.

1. The structural design shall comply with the *Building Code of Overseas Buildings Operations*.
2. Requirements of Section 605, *Air Filters*, of the *Mechanical Code of Overseas Buildings Operations* shall apply.
3. Requirements of Section 419, *Special Fire Protection Requirements for All Occupancies*, of this Chapter of the *Building Code of Overseas Buildings Operations* shall apply.
4. Requirements of Chapter 5, Exhaust Systems, of the *Mechanical Code of Overseas Buildings Operations* shall apply.
5. Requirements of Chapter 4, *Ventilation*, of the *Mechanical Code of Overseas Buildings Operations* shall apply.

## SECTION 428
## REPRESENTATIONAL HOUSING

**Add the following Section:**

**428.1 General.** Representational housing, whether on-compound or off-compound, includes the following residence types:

1. Chief of Mission Residence (CMR)
2. Deputy Chief of Mission Residence (DCR)
3. Consul General Residence (CGR)
4. Consul Residence (CR)
5. Principal Officer Residence (POR)

**428.2 Definition.** Representational housing includes all of the following elements:

1. Private residence
2. Representational spaces. Representational spaces are defined as those areas used for official reception and entertainment for local officials and dignitaries; and include the necessary support spaces.

**428.3 Requirements.** Representational housing, whether on-compound or off-compound shall meet the provisions of the *International Building Code* except as indicated in this section.

**428.3.1 Electrical.** The provisions of the *International Residential Code* shall apply to the installation of the electrical systems including alternations, repairs, replacement equipment, appliances, fixtures, fitting, and appurtenances thereto.

**428.3.2 Mechanical.** The provisions of the *International Residential Code* shall apply to the installation, alterations, repairs and replacement of mechanical systems including equipment, appliances, fixtures, fittings and/or appurtenances, including ventilating, heating, cooling, air-conditioning and refrigeration systems, incinerators and other energy-related systems.

**428.3.3 Plumbing.** The provisions of the *International Residential Code* shall apply to the installation, alterations, repair and replacement of plumbing systems including equipment, appliances, fixtures, fittings and/or appurtenances, and where connected to a water or sewage system.

**428.3.4 Fire Protection Systems.** The provisions of Chapter 9, *Fire Protection Systems*, of the *International Building Code* shall apply to the installation of the fire protection systems including alternations, repairs, replacement equipment, appliances, fixtures, fitting, and appurtenances thereto.

**428.3.5 Means of Egress and Life Safety.**

The provisions of the *International Building Code* shall apply to the means of egress and life safety in representational housing,
Exceptions: Representational spaces serve a unique diplomatic function and, regardless of occupant load, must retain a residential character. The following Sections of the IBC, related to means of egress and life safety are not applicable to representational spaces within representational housing unless required on a project specific basis:

Section 508, *Mixed Use and Occupancy*
Section 706, *Fire Barriers*
Section 707, *Shaft Enclosures*
Section 803.5, *Interior Finish Requirements Based on Group*
Section 1008.1.9, *Panic and Fire Exit Hardware*
Section 1011.1, *Exit Signs*
Section 1026, *Emergency Escape and Rescue*

**END OF CHAPTER IBC-4 AMENDMENTS**

# CHAPTER 5
# GENERAL BUILDING HEIGHTS AND AREAS

## SECTION 508
## MIXED USE AND OCCUPANCY

**Delete Exception 3 to Subsection 508.1 and replace with the following:**

**Exception:** 3 Representational housing in accordance with Section 428.

**END OF CHAPTER IBC-5 AMENDMENTS**

# CHAPTER 7
# FIRE AND SMOKE PROTECTION FEATURES

## SECTION 705
## EXTERIOR WALLS

**Delete subsection 705.11 in its entirety and replace with the following:**

**705.11 Parapets.** Parapets shall be provided on exterior walls of buildings.

**Exception**. Group R-3 where the entire building is provided with Class C roof covering, the exterior wall shall be permitted to terminate at the underside of the roof sheathing or deck of Type III, IV and V construction, provided:

1. The roof sheathing or deck is constructed of approved noncombustible materials or of fire-retardant-treated wood for a distance of 1220 mm (4 feet); or
2. The roof is protected with 16mm (0.625-inch) Type X gypsum board directly beneath the underside of the roof sheathing or deck, supported by a minimum of nominal 50 mm (2-inch ledgers) attached to the side of the roof framing members for a minimum distance of 1220 mm (4 feet).

**Insert the following subsection**

**705.11.1 Parapet construction.**

**705.11.1.1** Refer to Section 1403 for minimum parapet height requirements.

## SECTION 707
## FIRE BARRIERS

**Add Exception to Subsection 707.3.8 as follows:**

**Exception:** Representational housing, in accordance with Section 428.

## SECTION 713
## SHAFT ENCLOSURES

**Add Exception 4 to Subsection 713.11 as follows:**

4. Representational housing in accordance with Section 428.

**END OF CHAPTER IBC-7 AMENDMENTS**

# CHAPTER 8
# INTERIOR FINISHES

## SECTION 803
## WALL AND CEILING FINISHES

**Add Exception to Subsection 803.5 as follows:**

**Exception:** Representational housing in accordance with Section 428.

## SECTION 804
## INTERIOR FLOOR FINISH

**Add the following Subsection:**

**804.5 Carpeting.** Carpeting shall conform to the following requirements:

**804.5.1 Carpeting Types.** Modular carpet tiles are the standard for carpeted areas. Broadloom carpets or carpet tiles may be used in the Executive Suite.

**804.5.2 VOC Limits.** Carpet systems shall meet or exceed the requirements of the Carpet and Rug Institute's Green Label Indoor Air Quality Test Program. Tables 804.5.1, 804.5.2, and 804.5.3 provide the VOC limit requirements of the Carpet and Rug Institute's Green Label Indoor Air Quality Test Program.

1. In addition to complying with the above limits, adhesives used in carpet installation shall comply with the VOC limits of the South Coast Air Quality Management District Rule #1168. Rule #1168 is summarized in USGBC LEED Point Analysis, Indoor Environmental Quality (EQ) Credit 4.1: Low-Emitting Adhesives and Sealants.
2. The following documentation shall be submitted to the COR:
   - 2.1 Narrative listing all of the carpet systems used in the building, and stating that they comply with the current VOC limits of the Carpet and Rug Institute's Green Label Indoor Air Quality Test Program.
   - 2.2 Cut sheets for each carpet product used in the building highlighting VOC limits.

**TABLE 804.5.1**
**EMISSION FACTOR LIMITS FOR CARPETS ($mg/m^2 \times hr$)**

| | |
|---|---|
| Total VOCs | 0.5 |
| 4-PC (4-Phenylcyclohexene) | 0.05 |
| Formaldehyde | 0.05 |
| Styrene | 0.4 |

**TABLE 804.5.2**
**EMISSION FACTOR LIMITS FOR CUSHIONING (mg/m² x hr)**

| | |
|---|---|
| Total VOCs | 1.0 |
| BHT (Butylated Hydroxytoluene) | 0.30 |
| Formaldehyde | 0.05 |
| 4-PC (4-Phenylcyclohexene) | 0.05 |

**TABLE 804.5.3**
**EMISSION FACTOR LIMITS - ADHESIVES & SEAM SEALERS (mg/m² x hr)**

| | |
|---|---|
| Total VOCs | 10.0 |
| Formaldehyde | 0.05 |
| 2-Ethyl-1-Hexanol | 3.0 |

SECTION 808
**ACOUSTICAL CEILING SYSTEMS**

**Add the following Subsection:**

**808.2 Residential application.** Acoustical tile lay-in panel ceilings are not permitted within individual apartments or dwelling units.

**Exceptions.**

1. Corridors
2. Service areas

SECTION 810
**FURNITURE**

**Delete this section in its entirety and replace with the following:**

**810.1 General requirements.** Refer to OBO-ICS IFC Section 805 for requirements

**END OF CHAPTER IBC-8 AMENDMENTS**

# CHAPTER 9
# FIRE PROTECTION SYSTEMS

## SECTION 901
## GENERAL

**Add the following subsection:**

**901.9 Additional requirements.** For additional requirements, refer to the *International Fire Code*.

**END OF CHAPTER IBC- 9 AMENDMENTS**

# CHAPTER 10
# MEANS OF EGRESS

## SECTION 1008
## DOORS, GATES AND TURNSTILES

**1008.1.9.7 Delayed Egress Locks**

**Delete subsection Paragraph 5 in its entirety and replace with the following:**

5. OBO approved signs which read "KEEP PUSHING. THIS DOOR WILL OPEN IN 15 SECONDS. ALARM WILL SOUND." shall be provided on each exit door adjacent to the release. The sign letters shall be at least 25 mm in height on contrasting background.

**Add the following subsection paragraphs:**

7. Exit doors that are equipped with panic hardware may be equipped with a DS and OBO approved time delay door control system incorporating a failsafe/open emergency release feature. Operation of the release device shall activate a signal in the vicinity of the door for assuring those attempting to exit that the system is functional. Alarm Activation Operation of the release device shall activate a local signal in the vicinity of the door. A central alarm may also be provided. A manual activation by a central station (Security Post) feature shall also be provided. A centrally controlled manual abort feature can be added providing the abort feature meets OBO and DS requirements.
8. Exit doors that are equipped with panic hardware in buildings protected throughout by a supervised automatic fire alarm/detection or automatic sprinkler system may be equipped with approved locking devices which shall:
   a. Unlock upon activation of the automatic fire alarm or fire sprinkler system, and;
   b. Unlock (failsafe/ open) upon loss of electrical power, and;
   c. Initiate an irreversible process, which will free the latch within 15 seconds whenever a force of not more than 67 N (15 pounds) is applied to the release device, and;
   d. Not relock until the door has been opened.

**Add Exception 2 to Subsection 1008.1.10 as follows:**

2. Representational spaces, in accordance with Section 428.

## SECTION 1011
## EXIT SIGNS

**Add Exception 6 to Subsection 1011.1 as follows:**

6. Exit signs are not required in representational spaces, in accordance with Section 428.

SECTION 1013
**GUARDS**

**Replace the first sentence of Subsection 1013.6 as follows:**

**1013.6 Mechanical equipment.** Parapets or guards shall be provided at the roof perimeter where appliances, equipment, fans, roof hatch openings or other components that require service are located on a roof; or where an open side of a walking surface is located more than 762 mm (30 inches) above the floor, roof or grade below.

**Replace the first sentence of Subsection 1013.7 as follows:**

**1013.7 Roof access.** Parapets or guards shall be provided at the roof perimeter where the roof level is accessible by stair or roof hatch; or where an open side of a walking surface is located more than 762 mm (30 inches) above the floor, roof or grade below.

SECTION 1022
**EXIT ENCLOSURES;**

**Add Exception 8 to Subsection 1022.1 as follows:**

8. Exit stairs in representational housing, in accordance with Section 428.

SECTION 1029
**EMERGENCY ESCAPE AND RESCUE**

**Add Exception 8 to Subsection 1029.1 as follows:**

8. Residential structures required to comply with Paragraph 421.1 or OBO-ICS IMC Section 605 shall not require emergency escape and rescue openings provided all of the following conditions are met:

1. The building shall be noncombustible construction in accordance with Chapter 6.
2. The building is fully equipped with an approved automatic sprinkler system.
3. The building is equipped with a fire alarm and detection system.
4. The building is equipped with smoke exhaust capability.
5. The fire alarm and detection system is continuously monitored on-site.

**END OF CHAPTER IBC-10 AMENDMENTS**

# CHAPTER 11
# ACCESSIBILITY

## SECTION 1101
## GENERAL

**Delete the chapter in its entirety and replace with the following:**

**1101.1 Scope.** The provisions of this chapter shall control the design and construction of facilities for accessibility to physically disabled persons.

**1101.2 Accessible design and construction.** New and existing buildings and facilities shall be designed and constructed to be accessible in accordance with this code and *ADA and ABA Accessibility Guidelines for Buildings and Facilities*, Parts II (ABA chapters F1 and F2) and III (Technical chapters 3 through 10), The Access Board, July 23, 2004, as amended by GSA.

**Exception.** No new alterations are required for accessibility where existing buildings are previously in compliance in accordance with Section 3409.1.

**1101.2.1 Application.** The Architectural Barriers Act requires barrier-free access to DOS buildings and facilities located outside the Continental United States, whether building and facilities are owned or leased by DOS.

**1101.2.2 Availability.** Accessibility standards are available at: http://www.access-board.gov/guidelines-and-standards/buildings-and-sites/about-the-aba-standards Click ABA standards.

**END OF CHAPTER IBC-11 AMENDMENTS**

# CHAPTER 12
# INTERIOR ENVIRONMENT

## SECTION 1204
## TEMPERATURE CONTROL

**Delete this section in its entirety and replace with the following:**

**1204.1 Equipment and Systems.** For temperature and comfort control requirements, refer to IMC Section 309.

## SECTION 1205
## LIGHTING

**Add the following sentence to the end of the paragraph:**

**1205.1 General.** Daylight is not permitted in the PCC.

**Addthe following subsection:**

**1205.3.1 MSG Post 1 lighting**. Output shall be dimmer controlled. Dimmer shall provide continuous dimming range from one percent to one hundred percent brightness. Provide 540 lux (50 footcandles) general illuminance at the full brightness level.

**1205.3.2 Luminaires.**

**1205.3.2.1 Broad Band Filters.** Provide broad band filters for suppression of radio interference noise that may be conducted through power line fluorescent fixtures in all shielded areas.

**1205.3.2.2 Prohibited Fixture Types**

**1205.3.2.2.1 Incandescent Fixtures** Incandescent fixtures are not permitted without prior approval of OBO/PDCS/DE/EE through the COR.

**Exception:** Representational Spaces lighting may be a combination of fluorescent and IR tungsten halogen.

**1205.3.2.2.2 LED Fixtures** LED fixtures are not permitted in the CAA.

**1205.3.2.3 Emergency Lighting**

**1205.3.2.3.1 Minimal Emergency Illuminance:** Battery powered emergency lights shall be provided for minimal emergency Illuminance to evacuate personnel and to insure orderly shutdown of equipment in the Embassy buildings should failure of the normal power and the auxiliary generator occur. The design must be in accordance with *NEC* Articles 700 and 701, NFPA 101, and the applicable section of the IES *Lighting Handbook*.

**1205.3.2.3.2..Placement:** Battery operated emergency lights shall be furnished in all large open office spaces, Facility Manager (FM) office, warehouses, machinery and electrical rooms, gatehouses, UPS rooms, PBX rooms, generator rooms, stairwells, hallways and other public areas such as lobby, waiting rooms, conference rooms, and in public foyers to provide Illuminance for a minimum of 90 minutes.

**1205.3.2.3.3** Battery powered emergency lighting shall conform to UL 924 requirements for "unit Equipment" with sealed rechargeable batteries rated for 10 year life.

**1205.3.2.3.4** Charger shall be fully automatic solid-state type, with a sealed transfer relay. The unit shall automatically turn the lamp on when supply circuit voltage drops below 80% of nominal, protect battery from damage, recharge battery in shortest time, and maintain the charge when normal voltage is restored.

**1205.3.2.4 Exit Signs.** Exit signs shall be LED type and in accordance with NFPA requirements with red lettering on white background unless otherwise required by the applicable local law.

**1205.3.3 Controls**

**1205.3.3.1 Levels of Illuminance:** Where luminaires have three, four or more lamps, dim lamps continuously or switch the lamps symmetrically for two or three levels of illuminance. Provide automatic daylight dimming for luminaires adjacent to windows to achieve a uniform lighting level with daylighting.

**1205.3.3.2 Three or Four-Way Switching:** Provide three- or four-way switching or dimming combination of all room lights where two- or three-room entrances are not immediately adjacent to each other.

**1205.3.3.3 Automatic Controls:** Occupancy sensors shall be used to control lighting in hallways, open bay areas and other areas in the interest of energy conservation. Dual technology occupancy sensors will be required in lieu of ultrasonic motion sensors in Controlled Access Areas. Occupancy sensors shall have local floor over-ride "off" control in office buildings for use by night guards during their tours of the building.

**1205.3.3.4 Architectural Lighting Controls:** Scene dimming in combination with daylight dimming and occupancy sensors.

SECTION 1207
**SOUND TRANSMISSION**

**Add the following subsection:**

**1207.4 Noise Restrictions for Equipment**

**1207.4.1** External noise levels at the site boundary of the facility shall comply with the host country's noise laws and regulations. When local standards do not exist, noise shall not exceed 55 dB (daytime) and 45 dB (nighttime) using the "A-Weighted Sound Level."

**1207.4.2** Internal noise levels within buildings shall not exceed RC-35N in private offices, RC-30N in conference rooms and residences, and RC-40N in open office space per *ARI Standard 885-90*.

**1207.4.3** All vibrating, reciprocating and rotating equipment mounted to the roof or the building structure shall be isolated from its associated piping/ducting and the building structure.

**END OF CHAPTER IBC-12 AMENDMENTS**

# CHAPTER 13
# ENERGY EFFICIENCY

## SECTION 1301
## GENERAL

**Delete this subection in its entirety and replace with the following:**

**1301.1 Scope.** The design and construction of new office and high-rise residential buildings shall comply with the *Code of Federal Regulations 10 CFR 433, Energy Efficiency Standards for the Design and Construction of New Federal Commercial and Multi-Family High-Rise Residential Buildings*.

**1301.4 Thermal Performance of Building Envelope.** Provide minimum thermal resistance value (R-value) for insulation in the building exterior envelope components identified below:

1. Exterior walls: R-19 (U = 0.052 Btu/ft$^2$· hr· $^0$F) minimum.
2. Roof assemblies: R-30 (U = 0.033 Btu/ft$^2$· hr· $^0$F) minimum.
3. Increase R-values as necessary to comply with energy conservation requirements of this section and other contract requirements.

**END OF CHAPTER IBC-13 AMENDMENTS**

# CHAPTER 14
# EXTERIOR WALLS

## SECTION 1401
## GENERAL

**Replace Section 1401.1 with the following:**

**1401.1 Scope.** The provisions of this chapter shall establish the minimum requirements for exterior walls; parapets; exterior wall coverings; exterior wall openings; exterior windows and doors; architectural trim; balconies and similar projections; and bay and oriel windows.

## SECTION 1403
## PERFORMANCE REQUIREMENTS

**Add the following subsection:**

**1403.8 Roof edge fall protection.**

1. Provide parapets or guardrail at roof edges of all buildings.

   **Exception**: Compound Access Control (CAC) buildings where there is no roof-mounted equipment.

2. The height of the parapet shall be in accordance with Table 1403.7, measured from the top of walking surface at roof high point to top of coping.

**Table 1403.7**
**PARAPET HEIGHT**

| Building type | Minimum parapet or guardrail height |
|---|---|
| Office building | 1067 mm |
| Other | 1067 mm [a]<br>762 mm [b] |

a. Buildings which have stair access, hatch access or rooftop equipment.
b. Buildings which do not have stair access, hatch access or rooftop equipment.

## SECTION 1408
## EXTERIOR INSULATION AND FINISH SYSTEMS (EIFS)

**Delete this subection in its entirety and replace with the following:**

**1408.1 General.** The use of exterior insulation and finish systems (EIFS) is prohibited.

**END OF CHAPTER IBC-14 AMENDMENTS**

# CHAPTER 15
# ROOF ASSEMBLIES AND ROOF TOP STRUCTURES

## SECTION 1503
## WEATHER PROTECTION

**Add the following subsection:**

**1503.4.4 Additional requirements.**

1. Size the roof drainage system to accommodate local climatic conditions, roof slope and configuration.
2. Double the minimum drainage requirements at green roofing.
3. Locate interior drains at mid-span in column and beam lines to use deflection to assist in drainage.
4. Provide a minimum two drains for every 900 square meters of roof area, but not less than a minimum of two drains per roof surface located not less than 900 mm apart horizontally; plus secondary (emergency) scuppers.
5. Secondary (emergency) drainage. Locate emergency overflow scupper protection a maximum of 100 mm above roof surface.
6. Depress slab over a one meter square area around drains, approximately one meter square.
7. Provide insulated gutters and downspouts in cold regions.
8. Provide cast iron drain bodies and strainers.

## SECTION 1507
## REQUIREMENTS FOR ROOF COVERINGS

**Add the following subsection:**

**1507.4.6 Corrugated Roofing.** Provide thickness appropriate for span, but not less than thickness indicated below:

1. Aluminum: 0.454 mm (25 gage).
2. Copper: 0.411 mm (26 gage).
3. Galvanized Steel: 0.416 mm (27 gage).
4. Stainless Steel: 0.396 mm (28 gage).
5. Terne-Coated Steel/Stainless Steel: 0.412 mm (27 gage).

**Add new subsection.**

**1507.16.2 Landscaped (vegetated) roofs.**

**1507.16.2.1 General.** Landscaped roofs may be permitted on a site-specific basis where approved by the OBO Authority Having Jurisdiction under either of the following conditions:

1. Sustainability performance measures are required to be met.
2. Local jurisdiction mandates vegetated roofs.

**1507.16.2.1 2 Prohibited location.** Where vegetated roofs are required for a project, they are not permitted on the NOB upper (top) roof level.

**Add the following subsection:**

**1507.18 Transite Panels.** Only non-asbestos transite panels are permitted for roof coverings.

SECTION 1510
**REROOFING OF EXISTING BUILDINGS AND ROOFING FOR ADDITIONS**

**Delete Subsection 1510.1 without deleting the exception, and replace with the following:**

**1510.1 General.** Materials and methods of application used for recovering or replacing an existing roof covering, and for covering additions, shall comply with the requirements of Chapter 15.

**Add the following subsections:**

**1510.7 Oil Base Coating.** The use of oil based roof coating is prohibited due to the frequency of which those coatings are lead based.

**END OF CHAPTER IBC-15 AMENDMENTS**

# CHAPTER 16

# STRUCTURAL DESIGN

## SECTION 1601
## GENERAL

**Add the following subsection:**

**1601.2 Structural Systems.** Framing systems for new U.S. Diplomatic Mission facilities shall be designed and constructed of reinforced, cast-in-place concrete (see chapter 19 of the OBO-ICS) unless specifically directed otherwise by OBO/PDCS/DE.

**Add the following subsection:**

**1601.3 Prohibited Systems**

**1601.3.1 Precast, Prestressed/Post-Tensioned Systems or Precast-Prestressed Components** in combination with cast-in-place systems shall not be used unless specifically allowed by OBO/PDCS/DE.

**1601.3.2 Lightweight Concrete** as defined in ACI 318M-11 Chapter 2 shall not be used in structural members resisting forces generated by earthquake motions or blast.

**1601.3.3 Column spacing in any directions shall not exceed 9.00 m.**

**Delete ASCE 7, Section 12.3.3.1 in its entirety and replace with the following subsection:**

**1601.4 Configuration Irregularities - Buildings designed for blast forces or in Seismic Design Categories C and higher** shall be configured for efficient energy absorption and dissipation such that a continuous force paths from the roof to the foundation (columns, shear walls, braced frames, etc.) is provided. Unless specifically allowed by OBO/PDCS/DE prior to commencement of design, the following structural configurations are prohibited:

1. Plan irregularities: 1a, 1b, and 4 of ASCE 7, Table 12.3-1.
2. Vertical irregularities: 1a, 1b, 4, 5a and 5b of ASCE 7, Table 12.3-2.
3. Transfer girders supporting more than two framed levels.
4. Excessive cantilevered slabs, beams, and girders.

**Add the following subsection:**

**1601.5 Progressive Collapse.** OBO structures (including office, residential, and warehouse facilities) shall be designed so that there is a reasonable probability, if local damage occurs, that the structure as a whole will not collapse or be damaged to an extent disproportionate to the original cause of the local damage. Methods outlined in Commentary C1.4 of *ASCE 7-10, Minimum Design Loads for Buildings and Other Structures* (and associated references), shall be used to obtain the assurance that local damage will not precipitate collapse or be disproportionate to the original cause of the local damage. 'Local damage' is defined as the disappearance of any one column or beam located anywhere in the building. The required concrete framing system specified in Chapter 19 of the OBO-ICS

inherently provides considerations that prevent progressive collapse. Where the designer deviates from that structural system, such as using transfer girders or other discontinuities within a building, the designer shall demonstrate that the design meets the above requirements. Analyses shall be performed using applicable UFC guidelines but with the above definition regarding local damage in effect. Unlike the UFC, OBO's progressive collapse requirements are applicable regardless of the number of stories a building has.

**Add the following subsection:**

**1601.6 Minimum Design Load Criteria.** The minimum uniform and concentrated loads for DOS mission facilities shall be in accordance with the IBC Chapter 16 except as noted herein. Indicate on the structural drawings the design loads and live load reduction used for the project.

SECTION 1604
## GENERAL DESIGN REQUIREMENTS

**Delete the first sentence of section 1604.5 and replace with the following:**

**1604.5 Occupancy Category.** All office buildings and compound utility buildings shall be assigned an occupancy category of III. All other buildings shall have an occupancy category of II.

SECTION 1607
## LIVE LOADS

**Uniform live loads indicated in Table 1607.1 shall be supplemented and where applicable replaced by the following:**

**1607.3 Uniform Live Loads**

1. Residential Living Quarters and corridors serving them: 2.00 kN/m$^2$.

2. Residential Representational Areas (CMR, DCR, CGR, CR, POR, and MSGQ / MSGR): 5.00 kN/m$^2$.

3. MSGQ / MSGR Emergency Response Room, Exercise Room, Stairs, Storage, and Mechanical Areas: 5.00 kN/m$^2$ or concentrated load of 10 kN placed anywhere in the room, whichever produces the greater load effect.

4. Office Buildings: Offices, Stairs, Balconies, Corridors, Lobby Areas, Fixed Seating Assembly, Library Reading Rooms, Safe Areas, RMS Floors, Habitable and Accessible Attics, and all other areas unless otherwise noted below 5.00 kN/m$^2$.

6. Gratings on antenna platforms: 5.00 kN/m$^2$.

5. Light Storage Areas, Warehouses Mezzanines, SPX floors, UPS Room, and Battery Rooms: 6.00 kN/m$^2$ (or actual loading if greater).

6. Post Communications Center (PCC), Safe Havens, Built-In Conference Rooms (BCR), Secure Safe/Pouch Rooms, Secure Rooms, and Areas Enclosed in 60 minute FE/BR Vaults: 7.50 kN/m$^2$.

7. Commissary: 7.50 kN/m$^2$.

8. Mechanical Room / Area, Utility Buildings: 7.50 kN/m$^2$ (or actual loading if greater). Treat equipment pads as dead load.

9. Heavy Storage, Warehouses floors, and Generator Rooms: 12.00 kN/m$^2$ (or actual loading if greater).

10 Live Loads Induced by Maintenance: The need to remove heavy items of equipment such as boilers, transformers, and generators from the building shall be considered both as floor loading and as a hoisting load.

11. Garages (passenger vehicles only): 2.50 kN/m$^2$ and concentrated load of 13.5 kN, applied separately.

**Delete Section 1607.5 in its entirety and replace with the following:**

**1607.5 Partition Loads.** In office buildings and in other buildings where partition locations are subject to change, provision for partition weight shall be made, unless the specified live load exceeds 5.00 kN/m$^2$. Floors shall be designed for an additional uniformly distributed live load for partitions based on the partition type used, but not less than 1.00 kN/m$^2$. This component of live load shall not be reduced.

**The following changes to subsection 1607.9 Reduction in live loads apply:**

**Add the following to the beginning of subsection 1607.9.1:**

This section applies to vertical members only. No live load reduction shall be permitted for horizontal members.

**Delete subsection 1607.9.1.2 in its entirety and replace with the following:**

**1607.9.1.2 Heavy live loads.** Live loads that exceed 5.00 kN/m$^2$ (excluding partition load) shall not be reduced except the live loads for members supporting two or more floors are permitted to be reduced by a maximum of 20 percent, but the live load shall not be less than L as calculated in Section 1607.10.1.

**Add the following sentence and subsections:**

**1607.11 Roof Loads.** All roofs shall be designed for specified antennas, equipment installation loads, equipment hoist attachments, and other operational loading demands. All such areas shall be clearly designated on the architectural and structural drawings.

**1607.11.2.5 Minimum Roof Live Load.** The minimum roof live load except as noted shall be 1.50 kN/m$^2$.

**1607.11.2.6 Office Building Roof.** The minimum roof live load for office buildings shall be 6.00 kN/m$^2$.

**1607.11.2.7 Roof Maintenance Shed Roof.** The minimum roof live load for roof maintenance sheds (RMS) shall be 1.00 kN/m$^2$.

**1607.11.2.8 Utility Building Roof.** The minimum roof live load for utility buildings shall be 6.00 kN/m$^2$.

SECTION 1608
**SNOW LOADS**

**Add the following sentence:**

**1608.2 Ground snow loads**. OBO site-specific snow load data shall be as specified in the project statement of work (SOW). Use the values in Table 1609 (located at the end of this chapter) only when such data is not specifically given in the SOW.

SECTION 1609
**WIND LOADS**

**Replace the first sentence with the following:**

**1609.3 Basic wind speed. OBO** site-specific basic wind speed data shall be as specified in the project statement of work (SOW). Use the values in Table 1609 (located at the end of this chapter) only when such data is not specifically given in the SOW; however, the minimum basic wind speed (3 second gust) shall be 40 m/s.

SECTION 1610
**SOIL LATERAL LOAD**

**Add the following sentences to the end of the subsection:**

**1610.1 General.** Lateral pressure due to seismic forces shall also be taken into design consideration. See ASCE 7, Section 15.6.1 for requirements.

SECTION 1613
**EARTHQUAKE LOADS**

**Replace the first sentence of subsection 1613.5.1 with the following:**

**1613.5.1 Mapped Acceleration Parameters.** The parameters Ss and $S_1$ shall be as specified in the project statement of work (SOW). They shall be considered as site-specific values, unless noted otherwise. Use the values in Table 1609 (located at the end of this chapter) only when such data are not specifically given in the SOW. The values in a site specific statement of work shall govern over the values in Table 1609 when they are different from one another.

SECTION 1616
**SEISMIC DESIGN REQUIREMENTS FOR NONSTRUCTURAL COMPONENTS**

**Add the following subsections:**

Add the following to ASCE 7, Section 13.6.5.5:

**1616.1 ASCE 7, Section 13.6.5.5**

9. Pendant mounted lighting fixtures shall have a safety wire rim inside the stem to connect fixtures to underside of ceiling structure. Chain hung fixtures shall be attached with closed hooks.

10. Emergency battery operated lighting fixtures installed on shelf brackets shall be secured with chain or bolts to their support.

**Add the following subsections:**

Add the following to ASCE 7, Section 13.6.10:

**1616.2 ASCE 7, Section 13.6.10.5**

**Retention of Wire Rope.** Provide means for retaining each wire rope in its sheave groove during seismic activity.

**1616.3 ASCE 7 Section 13.6.10.6 Prevention of Snagging.** Provide means for preventing the snagging of ropes, chains and traveling cables when displaced by seismic disturbance.

## SECTION 1617
## SEISMIC DESIGN REQUIREMENTS FOR SEISMICALLY ISOLATED STRUCTURES

**Replace ASCE 7, Section 17.1 with the following subsection:**

**1617.1 ASCE 7, Section 17.1 General.** The use of seismic base isolation systems is prohibited unless specifically allowed by OBO.

## SECTION 1618
## BLAST ANALYSIS AND DESIGN

**Add the following section:**

**1618.1 General.** This supplement is provided as a design aid concerning specific blast related issues unique to structural design. In general, OBO's goal is to prevent loss of life, minimize injuries, and make evacuation and rescue possible. Even though prevention of structural collapse is the goal, minor damage to structural components and heavy damage to the facade may occur.

**1618.1.1 Flying Fragments.** The vulnerability of personnel to flying fragments generated by the destruction of "unhardened" (i.e., not blast-resistant) features such as perimeter walls, adjacent structures, sunscreens, veneers, ornament, exposed mechanical electrical equipment, etc shall be mitigated.

**1618.2 Blast Analysis.** The required approach to the structural design of buildings, structural building components, windows, etc., subjected to blast loading requires the following:

**1618.2.1 Blast Loads.** All new office buildings, office spaces, cafeteria spaces, commissary stores, and residences (residences where directed by OBO) shall be designed for the threat and conditions outlined below:

1. Threat of a Vehicular Bomb: The blast loading is predicated on the threat of a terrorist vehicular bomb located at the perimeter of the compound.
2. Setback distances: Refer to OBO-IBC ICS Chapter 2 for definition and OBO-IZC ICS Chapter 6 for requirements.
3. Charge Weight: See Attachment J.3.5.

**1618.2.2 Blast Design Requirements.** All OBO facilities designed to resist the effects of terrorist blast loading shall conform to the requirements of *Design of Structures to Resist the Effects of Accidental Explosions (UFC 3-340-02)* except as noted herein. Unfactored blast loads shall be combined with full unfactored dead and both full and 25% of the design live loads as separate loading cases, using allowable rotations and ductilities described in the following sections.

**1618.2.2.1 Calculation of Base Shear.** Further guidance and background for the calculation of base shear, ductile detailing, and ground shock analysis is provided in this section.

**1618.2.2.2 Design Criteria.** The following tables summarize the design criteria for cast-in-place reinforced concrete components and steel framing components, respectively, as applied to OBO office buildings. For exterior wall design using different materials, alternate criteria may be investigated that allows for heavy non-structural damage but that can be shown, by means of calculation and appropriate test data, to provide adequate blast and seismic protection. Such designs are subject to approval by OBO.

**1618.2.2.2.1 Blast Window Framing.** All blast window frame designs shall address, at a minimum, the response of axial effects on connections, stability and compression buckling of the mullions, and the potential for glazing and bite failure at the large response limits provided in the following tables.

**1618.2.2.3 Blast Resistant Exterior Stud Walls.** Prescriptive versions of these walls are available from OBO/PDCS/DE. Deviations and additions to these wall designs shall be verified by a blast analysis using the below allowables.

**TABLE 1618.2.2.2-1**
**CAST-IN-PLACE REINFORCED CONCRETE DESIGN CRITERIA**

| Topic | Criteria | Section |
|---|---|---|
| Maximum flexural response for interior slabs | $\theta \leq 6^{o}$ | 4-16 (Type II) |
| Maximum flexural response for non-load bearing exterior walls roof slabs and beams[1] | $\theta \leq 4^{o}$ | 4-16 (Type II) |
| Maximum flexural response for load bearing exterior walls[1] | $\theta < 2^{o}$ | |
| Exterior wall ties | Provided at each intersection | 4-18.4 |
| Maximum flexural response for columns | $\mu \leq 3$ | 4-51 |
| Ultimate shear stress (w/ stirrups) | $10\ (f_{cd})^{0.5}$ | 4-18.1 |

Where: $\theta$ is member end rotation
$\mu$ is ductility
$f_{cd}$ is dynamic concrete strength

For each item in the table above, the section of this reference (*UFC 3-340-02*) addressing the topic is listed in the right-hand column.

[1] If shear ties are used connecting the front and back faces of flexural reinforcement, a maximum rotation of 4 degrees may be used.

**TABLE 1618.2.2.2-2**
**STRUCTURAL STEEL FRAMING DESIGN CRITERIA**

| Topic | Criteria |
|---|---|
| Maximum flexural response: | |
| for composite/steel concrete slab[1] | $\theta \leq 4^{o}$, $\mu \leq 20$ |
| for steel wall plate | $\theta \leq 10^{o}$, $\mu \leq 30$ |
| for exterior wall columns[1] | $\theta \leq 2^{o}$, $\mu \leq 10$ |
| for interior columns[1] | $\theta \leq 2^{o}$, $\mu \leq 10$ |
| for steel studs used in exterior walls (Fy $\leq$ 33 ksi steel)[2] | $\theta \leq 9\text{-}18^{o}$, $\mu \leq 20$ (limit overall deflection to less than 600 mm) |
| for steel studs used in exterior walls (Fy > 33 ksi steel)[3] | $\theta \leq 7.5\text{-}15^{o}$, $\mu \leq 12$ (limit overall deflection to less than 600 mm) |
| for primary beams/girders[1] | $\theta \leq 4^{o}$, $\mu \leq 20$ |
| for cold-formed roof deck | $\theta \leq 2^{o}$, $\mu \leq 2$ |
| Ultimate shear stress in primary beams | $f_v \leq 0.55\ f_{dy}$ |
| Where: | $f_{dy}$ = dynamic yield stress |

[1] The maximum sideway deflection is limited to 0.04 times the story height, as per *UFC 3-340-01 (TM5-855-1)*.
[2] Maximum rotation is approximately 9 degrees for a linear shape and 18 degrees for a parabolic shape.
[3] Maximum rotation is approximately 7.5 degrees for a linear shape and 15 degrees for a parabolic shape.

**TABLE 1618.2.2.2-3**
**STEEL WINDOW FRAME CRITERIA**

| | |
|---|---|
| For muntin members of windows with special laminated glazing and muntins | $\theta \leq 25^{o}$, $\mu \leq 30$ |
| All other members | $\theta \leq 9^{o}$, $\mu \leq 15$ |

**TABLE 1618.2.2.2-4**
**ALUMINUM WINDOW FRAME CRITERIA**

| | |
|---|---|
| For members where ultimate tensile strength is 10% higher than yield strength | $\theta \leq 9^{o}$, $\mu \leq 15$ |
| For members where ultimate tensile strength is NOT 10% higher than yield strength | $\mu \leq 1$ |

**1618.2.2.4 Material Properties.** The dynamic enhancement factors (increase in static ultimate and/or yield strength from strain rate effects and aging) shall be as follows:

**TABLE 1618.2.2.4-1**
**DYNAMIC ENHANCEMENT FACTORS OF MATERIALS**

| Material | Enhancement Factor | Effect |
|---|---|---|
| Concrete | 1.25 | Aging and strain rate |
| Reinforcing steel | 1.20 | Strain rate |
| Structural steel | 1.20 | Strain rate |
| Aluminum | 1.05 | Strain Rate |

**1618.2.2.5 Blast Parameters.** Given the threat of a vehicular bomb, the air blast shall be assumed as originating at a single point source, consisting of a hemispherical shock wave. The blast parameters (e.g., peak pressure, impulse, duration) shall be defined at the location of the component under consideration in accordance with UFC 3-340-02.

**1618.2.2.6 Loading Functions.** UFC 3-340-02 gives information regarding loading functions; the relevant sections are listed below for various structural components. In addition, UFC 3-340-01 (TM5-855-1) provides supplemental information for components not covered by the above reference; the appropriate section is listed for those cases.

**TABLE 1618.2.2.5-1**
**STRUCTURAL COMPONENT LOADING FUNCTIONS**

| Component | Loading Type | *UFC 3-340-02* | *UFC 3-340-01* |
|---|---|---|---|
| Exterior wall | Reflected pressure | 2-15.3.2. | 9.3 |
| Exterior column | Reflected pressure | | |
| Flat roof slab | Incident pressure<br>Internal pressure | 2-15.3.3<br>Fig. 2-201(b) | 9.3 |
| Exterior bay | Internal pressure | Fig. 2-201(b) | |
| Ext. bay floor slabs | Internal pressure | Fig. 2-201(b) | |
| Windows | Refl./Inc. pressure | 6-27 to 32 | |
| Bsmt. walls & fdn. | Ground shock | | 9.4 |
| In-structure shock | Ground shock | | Chapter 12 |

1. Alternate Splicing: Throughout the building structural frame, splicing shall be avoided in regions of high shear and moment. Also, splicing within a region shall be staggered in order to avoid failure at a particular splice location. For structural elements specifically designed for blast (e.g., the exterior walls and the roof framing), tension splices shall be used throughout.

2. Internal Partitioning: Very little internal leakage pressure is expected due to the impinging blast wave for a DOS facility designed to resist blast effects. Designing internal partitions to resist blast pressure is thus normally not required.

**1618.2.2.7 Ductile Detailing Requirements.** Unless more stringent ductile detailing requirements are required by Code or design, all frame members (including those not subjected to blast forces) of all reinforced concrete structures designed for blast shall be detailed in accordance with the IBC's Intermediate Moment Frame (IMF) requirements as a minimum. This requirement primarily impacts locales with low seismic hazard and is intended to provide additional ductility to accommodate uncertainties associated with abnormal loading conditions. The resulting IMFs shall be considered as not having any impact or applicability to the designated lateral force resisting system of the building. Note that this is a detailing requirement and not a loading requirement.

1. Lacing requirements per UFC 3-340-02 are waived.

2. Transverse reinforcement requirements (wall slabs) shall use cross-ties as defined by IBC and not as shown in Figure 4-101 per UFC 3-340-02. Furthermore, consecutive cross-ties shall have their 90-degree hooks at opposite sides of the flexural member as provided in the IBC.

3. Further IMF Requirements: Columns shall always be detailed as columns regardless of the factored compressive axial load on the column. Use closed stirrups and ties for all beams and columns. Provide lateral joint reinforcement spaced at 150 mm maximum at all beam/column joints.

**1618.2.3 Base Shear.** The calculation of the base shear due to blast shall be compared to the base shear calculated for the appropriate seismic zone for the region. The building shall be designed for the worst of these two cases.

**1618.2.3.1 Formula for Base Shear Due to Blast.** Shown below is the derivation of the formula for base shear due to blast, as illustrated from the reference per Introduction to Structural Dynamics, that shall be used.

1. Ultimate Resistance: The ultimate resistance, Rm, for an impulsive loading acting on an elasto-plastic system is:

$$R_m = \frac{2*\pi*I}{T_a*(2*\mu-1)^{0.5}}$$

Where:
I = the blast induced impulse
$T_a$ = the fundamental period of the structure
$\mu$ = the design ductility

2. Impulse: The impulse used shall be the total reflected impulse impinging on the face of the building. The calculation of the total impulse may be accomplished by using the CONWEP code per *Design and Analysis of Hardened Structures to Conventional Weapons* to determine the average impulse on the structure and then multiplying this average value by the total area of impingement.

3. Fundamental Period of the Structure: There are many methods available for estimating the fundamental period of the structure. The *IBC* provides one acceptable method. As shown elsewhere in the *IBC* and outlined below:

$$T_a = C_T(h_n)^{0.75}$$

Where: $C_T$ = numerical coefficient dependent on building type

$h_n$ = the total height of the building in feet

The *IBC* states that: $C_T$=0.035 for steel moment-resisting frames

$C_T$ = 0.030 for reinforced concrete moment-resisting frames and eccentrically braced steel frames

$C_T$= 0.020 for all other buildings

4. Value of CT: If this method is chosen, OBO recommends a CT value of between 0.03 and 0.02 be used for the design of reinforced concrete structures. It is often desirable to obtain a distribution of answers between these end points to ascertain how the base shear is affected by a change in this parameter, and use engineering judgment to choose the most appropriate solution for design. The

amount of 'infill' wall used for the building exterior may affect this parameter . A CT value of 0.035 is recommended for steel frame structures.

**1618.2.3.2 Wall Response.** Since the ground floor exterior walls of Embassy facilities are constructed of cast-in-place reinforced concrete or stiff steel layers to meet forced entry and ballistic resistance requirements, the lateral force resisting system will utilize these walls. Thus, these walls need to be designed and detailed with adequate provisions for ductility and inelastic response. What is not desired is a sudden shear type failure.

1. Above the ground floor, forced entry and ballistic resistance requirements are usually not required if they are considered to be 5.00 m above grade or an accessible platform. Such walls shall be designed to provide adequate blast and seismic protection to the occupants, but heavy (repairable) damage from a blast event is allowed. Thus, lighter weight (infill) construction may be considered, providing that it by shown, by calculation and appropriate test data, that it provides adequate occupant protection to blast and seismic loading.

2. If such 'infill' walls are used, such walls may reduce blast reaction forces to the surrounding structure, but also allow small amounts of blast pressure inside the building. Additionally, they may decrease the weight and stiffness of the overall structure. The blast consultant and structural engineer shall fully explore these items during the design phases, if exterior infill walls are used in the design.

3. Typical $\mu$ values are well known for various elements failing in shear and flexure under flexural loading (*see UFC 3-340-02, and Introduction to Structural Dynamics*). Due to the unique features of blast loading (i.e., incident and reflected pressures surrounding the building) and the uncertainties (as outlined above) pertaining to configuration and response of NOBs, OBO recommends a $\mu$ value of 5 for base shear calculations. Different ductility's shall be used for individual element design. Parameters influencing the ultimate ductility of these structures are the mode of failure, the amount of reinforcement, the presence of a P-delta effect, the wall panel aspect ratio, and the number of building stories.

**1618.2.3.3 Uniform Pressure.** Continuing with the derivation of base shear methodology, the building is assumed to be a cantilever under uniform pressure, such that:

$$R_m = \frac{2*M_u}{h_n}$$

Where: $M_u$ = The ultimate moment

**1618.2.3.4 Ultimate Resisting Forces.** For a building responding in the first shear mode, the ultimate resisting forces consist of a couple produced by the base shear and the inertial forces, which are assumed to increase linearly with height:

$$M_u = \frac{2*h_n*V_b}{3}$$

Where: $V_b$ = the base shear

**1618.2.3.5 Base Shear.** Finally, combining the two expressions for Rm and Mu leads to:

$$V_b = \frac{3*\pi*I}{2*T_a*(2*\mu-1)^{0.5}}$$

**1618.2.3.6 Distribution of Force.** This is the expression that shall be used for the calculation of base shear due to blast. The distribution of this force decreases linearly from ground level to roof level, so that:

$$V(x) = Vb*(1-x/hn)$$

Where: x is less than $h_n$

**1618.2.4 Blast Vulnerability Studies: Existing Office Buildings (EOB)**

A blast vulnerability study shall be required for the following project types to identify specific recommendations and upgrades to mitigate the effects of blast. The approved study by OBO will become the criteria for that specific project. Other project types do not require vulnerability study.

1. Major façade or window and seismic renovation.
2. Major Building Renovations: Defined where the cost of the renovation equals or exceeds 50 percent of the market value of the building before the renovation is started.

**1618.2.5 Blast Vulnerability Studies: Newly Acquired Buildings (NAB)**

For NABs intended to house chanceries or consulates, a blast vulnerability study shall be required to identify specific recommendations and upgrades to mitigate the effects of blast. The approved study by OBO will become the criteria for that specific project.

**1618.2.6 Blast Vulnerability Studies**, where they define specific building vulnerabilities, are classified confidential. The target threat for EOBs and NABs upgraded for blast design is:

a. Between setbacks of 0 and 40 feet, 25% of the charge weight for NECs
b. Over 40 feet and less than 100 feet, a design impulse of 300 psi-msec (this impulse is classified SBU).
c. 100 feet and over, use the NEC charge weight

When it is impractical to produce a building upgrade to the full extent of the required criteria, the blast vulnerability study shall address feasible upgrades that mitigate lesser threats.

**TABLE 1609**
**DESIGN CRITERIA FOR SNOW, WIND AND SEISMIC**

| POST | COUNTRY | GROUND SNOW LOADS $p_g$ (kN/m²) ($p_g$ x 20.89 = psf) | ULTIMATE DESIGN WIND SPEED[2,3] (3 SECOND GUST) $V_{ult}$ (m/s) ($V_{ult}$ x 2.237 = mph) | | BASIC WIND SPEED[4] (3 SECOND GUST) V (m/s) | MCE SPECTRAL RESPONSE ACCELERATION PARAMETER[5] | | 1997 UBC SEISMIC ZONE[6] |
|---|---|---|---|---|---|---|---|---|
| | | | RISK CATEGORY | | | | | |
| | | | II | III | | $S_S$ | $S_1$ | |
| Abidjan | Cote D'ivoire | 0 | 73 | 78 | 58 | 0.10 | 0.04 | 0 |
| Abu Dhabi | United Arab Emirates | 0 | 59 | 68 | 47 | 0.10 | 0.04 | 0 |
| Abuja | Nigeria | 0 | 51 | 54 | 40 | 0.10 | 0.04 | 0 |
| Accra | Ghana | 0 | 73 | 78 | 58 | ***1.39*** | ***0.55*** | **3** |
| Adana | Turkey | 0.24 | 53 | 57 | 42 | 1.50* | 0.60* | 4 |
| Addis Ababa | Ethiopia | 0 | 62 | 66 | 49 | ***1.69*** | ***0.68*** | **4** |
| Aden City | Yemen | 0 | NA | NA | NA | 1.13* | 0.45* | 3 |
| Al Hillah | Iraq | 0 | 51 | 54 | 40 | 0.56* | 0.23* | 2A |
| Aleppo | Syria | NA | NA | NA | NA | 1.13* | 0.45* | 3 |
| Alexandria | Egypt | 0 | NA | NA | NA | 0.75* | 0.30* | 2B |
| Algiers | Algeria | 0 | 59 | 64 | 47 | ***1.61*** | ***0.65*** | **4** |
| Almaty | Kazakhstan | 1.44 | 51 | 54 | 40 | ***1.19*** | ***0.37*** | **3** |
| Amman | Jordan | 0 | 57 | 61 | 45 | ***0.75*** | ***0.30*** | **2A** |
| Amsterdam | Netherlands | 2.40 | 68 | 73 | 54 | 0.10 | 0.04 | 0 |
| Ankara | Turkey | 0.96 | 53 | 57 | 42 | ***0.92*** | ***0.37*** | **2B** |
| Antananarivo | Madagascar | 0 | ***59*** | ***64*** | ***47*** | 0.10 | 0.04 | 0 |
| Antwerp | Belgium | NA | NA | NA | NA | 0.28* | 0.11* | 1 |
| Apia | Western Samoa | 0 | ***73*** | ***78*** | ***58*** | 1.13* | 0.45* | 3 |
| Ashgabat | Turkmenistan | 2.40 | 53 | 57 | 42 | ***1.14*** | ***0.46*** | **3** |
| Asmara | Eritrea | 0 | 59 | 64 | 47 | ***0.59*** | ***0.23*** | **2A** |

| POST | COUNTRY | GROUND SNOW LOADS $p_g$ (kN/m²) ($p_g$ x 20.89 = psf) | ULTIMATE DESIGN WIND SPEED[2,3] (3 SECOND GUST) $V_{ult}$ (m/s) ($V_{ult}$ x 2.237 = mph) RISK CATEGORY | | BASIC WIND SPEED[4] (3 SECOND GUST) V (m/s) | MCE SPECTRAL RESPONSE ACCELERATION PARAMETER[5] | | 1997 UBC SEISMIC ZONE[6] |
|---|---|---|---|---|---|---|---|---|
| | | | II | III | | $S_S$ | $S_1$ | |
| Astana | Kazakhstan | 1.92 | 57 | 61 | 45 | 0.28* | 0.11* | 1 |
| Asuncion | Paraguay | 0 | 51 | 54 | 40 | 0.10 | 0.04 | 0 |
| Athens | Greece | 0.48 | 51 | 54 | 40 | ***1.50*** | ***0.60*** | **4** |
| Auckland | New Zealand | 0 | ***51*** | ***54*** | ***40*** | 0.75* | 0.30* | 2B |
| Baghdad | Iraq | 0 | 51 | 54 | 40 | 0.75* | 0.30* | 2B |
| Baku | Azerbaijan | 0.96 | 68 | 73 | 54 | ***1.12*** | ***0.45*** | **3** |
| Bamako | Mali | 0 | 62 | 66 | 49 | 0.10 | 0.04 | 0 |
| Bandar Seri Begawan | Brunei | 0 | ***57*** | ***61*** | ***45*** | 0.28* | 0.11* | 1 |
| Bandung | Indonesia | 0 | NA | NA | NA | 1.13* | 0.45* | 3 |
| Bangkok | Thailand | 0 | ***51*** | ***54*** | ***40*** | 0.28* | 0.11* | 1 |
| Bangui | Central African Republic | 0 | 62 | 66 | 49 | 0.10 | 0.04 | 0 |
| Banja Luka | Bosnia-Herzegovina | 1.68 | 73 | 78 | 58 | 1.50* | 0.60* | 4 |
| Banjul | The Gambia | 0 | 73 | 78 | 58 | 0.10 | 0.04 | 0 |
| Barcelona | Spain | 0.48 | 51 | 54 | 40 | 0.75* | 0.30* | 2B |
| Barranquilla | Colombia | 0 | 64 | 69 | 51 | 0.75* | 0.30* | 2B |
| Basrah | Iraq | 0 | 73 | 78 | 58 | 0.56* | 0.23* | 2A |
| Beijing | China | 0.24 | 51 | 54 | 40 | ***1.68*** | ***0.67*** | **4** |
| Beirut | Lebanon | 0 | 57 | 61 | 45 | ***1.18*** | ***0.47*** | **3** |
| Belfast | United Kingdom | 0.96 | 59 | 64 | 47 | 0.10 | 0.04 | 0 |
| Belgrade | Serbia & Montenegro | 1.44 | 59 | 64 | 47 | ***1.47*** | ***0.59*** | **3** |

| POST | COUNTRY | GROUND SNOW LOADS $p_g$ (kN/m²) ($p_g$ x 20.89 = psf) | ULTIMATE DESIGN WIND SPEED[2,3] (3 SECOND GUST) $V_{ult}$ (m/s) ($V_{ult}$ x 2.237 = mph) RISK CATEGORY | | BASIC WIND SPEED[4] (3 SECOND GUST) V (m/s) | MCE SPECTRAL RESPONSE ACCELERATION PARAMETER[5] | | 1997 UBC SEISMIC ZONE[6] |
|---|---|---|---|---|---|---|---|---|
| | | | II | III | | $S_S$ | $S_1$ | |
| Belize City | Belize | 0 | 68 | 73 | 54 | 0.28* | 0.11* | 1 |
| Belmopan | Belize | 0 | ***57*** | ***61*** | ***45*** | ***0.34*** | ***0.13*** | **1** |
| Berlin | Germany | 1.68 | 64 | 69 | 51 | 0.10 | 0.04 | 0 |
| Bern | Switzerland | 1.92 | 68 | 73 | 54 | 0.56* | 0.23* | 2A |
| Bilbao | Spain | NA | NA | NA | NA | 0.75* | 0.30* | 2B |
| Bishkek | Kyrgyzstan | 0.96 | 57 | 61 | 45 | ***2.30*** | ***0.92*** | **4** |
| Bissau | Guinea-Bissau | 0 | 73 | 78 | 58 | 0.10 | 0.04 | 0 |
| Blantyre | Malawi | 0 | NA | NA | NA | 1.13* | 0.45* | 3 |
| Bogota | Colombia | 0 | 51 | 54 | 40 | ***1.05*** | ***0.42*** | **3** |
| Bonn | Germany | NA | NA | NA | NA | 0.56* | 0.23* | 2A |
| Bordeaux | France | 1.44 | 59 | 64 | 47 | 0.75* | 0.30* | 2B |
| Brasilia | Brazil | 0 | 51 | 54 | 40 | 0.10 | 0.04 | 0 |
| Bratislava | Slovakia | 1.44 | 57 | 61 | 45 | 0.75* | 0.30* | 2B |
| Brazzaville | Congo | 0 | 62 | 66 | 49 | 0.10 | 0.04 | 0 |
| Bridgetown | Barbados | 0 | ***73*** | ***78*** | ***58*** | 1.13* | 0.45* | 3 |
| Brisbane | Australia | 0 | NA | NA | NA | 0.28* | 0.11* | 1 |
| Brussels | Belgium | 1.92 | 68 | 73 | 54 | 0.28* | 0.11* | 1 |
| Bucharest | Romania | 1.68 | 59 | 64 | 47 | 1.13* | 0.45* | 3 |
| Budapest | Hungary | 2.64 | 82 | 88 | 65 | 0.56* | 0.23* | 2A |
| Buenos Aires | Argentina | 0.96 | 62 | 66 | 49 | 0.10 | 0.04 | 0 |
| Bujumbura | Burundi | 0 | 57 | 61 | 45 | ***1.48*** | ***0.59*** | **3** |
| Busan | South Korea | NA | NA | NA | NA | 0.56* | 0.23* | 2A |
| Cairo | Egypt | 0 | 51 | 54 | 40 | 0.56* | 0.23* | 2A |

| POST | COUNTRY | GROUND SNOW LOADS $p_g$ (kN/m²) ($p_g$ x 20.89 = psf) | ULTIMATE DESIGN WIND SPEED[2,3] (3 SECOND GUST) $V_{ult}$ (m/s) ($V_{ult}$ x 2.237 = mph) RISK CATEGORY | | BASIC WIND SPEED[4] (3 SECOND GUST) V (m/s) | MCE SPECTRAL RESPONSE ACCELERATION PARAMETER[5] | | 1997 UBC SEISMIC ZONE[6] |
|---|---|---|---|---|---|---|---|---|
| | | | II | III | | $S_S$ | $S_1$ | |
| Calgary | Canada | 1.92 | 51 | 54 | 40 | 0.28* | 0.11* | 1 |
| Cali | Columbia | 0 | NA | NA | NA | 1.50* | 0.60* | 4 |
| Canberra | Australia | 0.48 | ***59*** | ***64*** | ***47*** | 0.28* | 0.11* | 1 |
| Cancun | Mexico | 0 | NA | NA | NA | 0.10 | 0.04 | 0 |
| Cape Town | South Africa | 0 | 68 | 73 | 54 | ***0.54*** | ***0.21*** | **2A** |
| Caracas | Venezuela | 0 | ***68*** | ***73*** | ***54*** | ***1.38*** | ***0.55*** | **4** |
| Casablanca | Morocco | 0 | 57 | 61 | 45 | 0.56* | 0.23* | 2A |
| Cebu | Philippines | 0 | 73 | 78 | 58 | 1.50* | 0.60* | 4 |
| Chengdu | China | 0.24 | 57 | 61 | 45 | ***2.02*** | ***0.81*** | **3** |
| Chennai | India | 0 | ***53*** | ***57*** | ***42*** | 0.28* | 0.11* | 1 |
| Chiang Mai | Thailand | 0 | ***71*** | ***76*** | ***56*** | 0.56* | 0.23* | 2A |
| Chisinau | Moldova | 3.12 | 57 | 61 | 45 | 0.75* | 0.30* | 2B |
| Ciudad Juarez | Mexico | 0 | 51 | 54 | 40 | ***0.38*** | ***0.15*** | **1** |
| Cluj | Romania | 1.44 | 57 | 61 | 45 | 0.56* | 0.23* | 2A |
| Colombo | Sri Lanka | 0 | ***68*** | ***73*** | ***54*** | 0.10 | 0.04 | 0 |
| Colon | Panama | 0 | NA | NA | NA | 0.75* | 0.30* | 2B |
| Conakry | Guinea | 0 | 62 | 66 | 49 | 0.10 | 0.04 | 0 |
| Copenhagen | Denmark | 2.4 | 68 | 73 | 54 | 0.28* | 0.11* | 1 |
| Cotonou | Benin | 0 | 68 | 73 | 54 | 0.10 | 0.04 | 0 |
| Curacao | Netherlands Antilles | 0 | ***73*** | ***78*** | ***58*** | 0.56* | 0.23* | 2A |
| Dakar | Senegal | 0 | 68 | 73 | 54 | 0.10 | 0.04 | 0 |

| POST | COUNTRY | GROUND SNOW LOADS $p_g$ (kN/m²) ($p_g$ x 20.89 = psf) | ULTIMATE DESIGN WIND SPEED[2,3] (3 SECOND GUST) $V_{ult}$ (m/s) ($V_{ult}$ x 2.237 = mph) RISK CATEGORY | | BASIC WIND SPEED[4] (3 SECOND GUST) V (m/s) | MCE SPECTRAL RESPONSE ACCELERATION PARAMETER[5] | | 1997 UBC SEISMIC ZONE[6] |
|---|---|---|---|---|---|---|---|---|
| | | | II | III | | $S_S$ | $S_1$ | |
| Damascus | Syria | 0.48 | 51 | 54 | 40 | ***0.74*** | ***0.30*** | **2B** |
| Dar Es Salaam | Tanzania | 0 | 68 | 73 | 54 | 0.28* | 0.11* | 1 |
| Dhahran | Saudi Arabia | 0 | 57 | 61 | 45 | 0.10 | 0.04 | 0 |
| Dhaka | Bangladesh | 0 | ***68*** | ***73*** | ***54*** | ***0.80*** | ***0.32*** | **2B** |
| Dili | East Timor | 0 | ***62*** | ***66*** | ***49*** | ***2.42*** | ***0.97*** | **4** |
| Djibouti | Djibouti | 0 | 64 | 69 | 51 | ***1.55*** | ***0.62***. | **4** |
| Doha | Qatar | 0 | 51 | 54 | 40 | 0.10 | 0.04 | 0 |
| Douala | Cameroon | 0 | NA | NA | NA | 0.10 | 0.04 | 0 |
| Dubai | United Arab Emirates | 0 | 59 | 64 | 47 | ***1.03*** | ***0.41*** | **3** |
| Dublin | Ireland | 1.44 | 68 | 73 | 54 | 0.10 | 0.04 | 0 |
| Durban | South Africa | 0 | 59 | 64 | 47 | 0.28* | 0.11* | 1 |
| Dushanbe | Tajikistan | 1.44 | 53 | 57 | 42 | ***1.60*** | ***0.64*** | **4** |
| Dusseldorf | Germany | 1.92 | 68 | 73 | 54 | 0.28* | 0.11* | 1 |
| Edinburgh | United Kingdom | 1.44 | 62 | 66 | 49 | 0.28* | 0.11* | 1 |
| Erbil | Iraq | | | | | ***1.23*** | ***0.49*** | **3** |
| Florence | Italy | 0.96 | 53 | 57 | 42 | 0.56* | 0.23* | 2A |
| Fort de France | Martinique | 0 | NA | NA | NA | 0.75* | 0.30* | 2B |
| Frankfurt | Germany | 0.96 | 64 | 69 | 51 | 0.56* | 0.23* | 2A |
| Freetown | Sierra Leone | 0 | 73 | 78 | 58 | 0.10 | 0.04 | 0 |
| Fukuoka | Japan | 0.24 | ***76*** | ***81*** | ***60*** | 1.50* | 0.60* | 4 |
| Gaborone | Botswana | 0 | 62 | 66 | 49 | 0.10 | 0.04 | 0 |
| Geneva | Switzerland | 0.96 | 51 | 54 | 40 | 0.56* | 0.23* | 2A |

| POST | COUNTRY | GROUND SNOW LOADS $p_g$ (kN/m²) ($p_g$ x 20.89 = psf) | ULTIMATE DESIGN WIND SPEED[2,3] (3 SECOND GUST) $V_{ult}$ (m/s) ($V_{ult}$ x 2.237 = mph) RISK CATEGORY | | BASIC WIND SPEED[4] (3 SECOND GUST) V (m/s) | MCE SPECTRAL RESPONSE ACCELERATION PARAMETER[5] | | 1997 UBC SEISMIC ZONE[6] |
|---|---|---|---|---|---|---|---|---|
| | | | II | III | | $S_S$ | $S_1$ | |
| Genoa | Italy | 1.44 | 51 | 54 | 40 | 0.75* | 0.30* | 2B |
| Georgetown | Guyana | 0 | 62 | 66 | 49 | 0.10 | 0.04 | 0 |
| Guadalajara | Mexico | 0 | ***68*** | ***73*** | ***54*** | 0.75* | 0.30* | 2B |
| Guangzhou | China | 0 | 57 | 61 | 45 | ***0.69*** | ***0.28*** | **2A** |
| Guatemala City | Guatemala | 0 | ***62*** | ***66*** | ***49*** | ***1.85*** | ***0.74*** | **4** |
| Guayaquil | Ecuador | 0 | 51 | 54 | 40 | ***1.87*** | ***0.75*** | **4** |
| Haifa | Israel | 0 | NA | NA | NA | 1.13* | 0.45* | 3 |
| Halifax | Canada | 1.68 | 62 | 66 | 49 | 0.28* | 0.11* | 1 |
| Hamilton | Bermuda | 0 | ***71*** | ***76*** | ***56*** | 0.10 | 0.04 | 0 |
| Hamburg | Germany | 1.68 | 71 | 76 | 56 | 0.10 | 0.04 | 0 |
| Hanoi | Vietnam | 0 | ***53*** | ***57*** | ***42*** | 0.28* | 0.11* | 1 |
| Harare | Zimbabwe | 0 | 59 | 64 | 47 | ***0.29*** | ***0.11*** | **1** |
| Havana | Cuba | 0 | ***62*** | ***66*** | ***49*** | 0.28* | 0.11* | 1 |
| Helsinki | Finland | 1.68 | 51 | 54 | 40 | 0.28* | 0.11* | 1 |
| Herat | Afghanistan | 0 | NA | NA | NA | ***0.55*** | ***0.25*** | **1** |
| Hermosillo | Mexico | 0 | ***68*** | ***73*** | ***54*** | 0.75* | 0.30* | 2B |
| Ho Chi Minh City | Vietnam | 0 | ***51*** | ***54*** | ***40*** | 0.28* | 0.11* | 1 |
| Hong Kong | Hong Kong | 0 | ***71*** | ***76*** | ***56*** | 0.75* | 0.30* | 2B |
| Honiara | Solomon Islands | 0 | 62 | 66 | 49 | 1.50* | 0.60* | 4 |
| Hyderabad | India | 0 | NA | NA | NA | ***0.45*** | ***0.18*** | **1** |
| Isfahan | Iran | NA | NA | NA | NA | 1.13* | 0.45* | 3 |

| POST | COUNTRY | GROUND SNOW LOADS $p_g$ (kN/m²) ($p_g$ x 20.89 = psf) | ULTIMATE DESIGN WIND SPEED[2,3] (3 SECOND GUST) $V_{ult}$ (m/s) ($V_{ult}$ x 2.237 = mph) RISK CATEGORY | | BASIC WIND SPEED[4] (3 SECOND GUST) V (m/s) | MCE SPECTRAL RESPONSE ACCELERATION PARAMETER[5] | | 1997 UBC SEISMIC ZONE[6] |
|---|---|---|---|---|---|---|---|---|
| | | | II | III | | $S_S$ | $S_1$ | |
| Islamabad | Pakistan | 1.68 | 68 | 73 | 54 | ***2.14*** | ***0.86*** | **4** |
| Istanbul | Turkey | 1.68 | 51 | 54 | 40 | 1.50* | 0.60* | 4 |
| Izmir | Turkey | NA | 51 | 54 | 40 | 1.50* | 0.60* | 4 |
| Jakarta | Indonesia | 0 | ***62*** | ***66*** | *49** | ***1.35*** | ***0.54*** | **4** |
| Jeddah | Saudi Arabia | 0 | 59 | 64 | 47 | 0.56* | 0.23* | 2A |
| Jerusalem | Jerusalem | 0 | 51 | 54 | 40 | ***0.80*** | ***0.32*** | **2B** |
| Johannesburg | South Africa | 0 | 57 | 61 | 45 | 0.75* | 0.30* | 2B |
| Juba | Sudan | 0 | 62 | 66 | 49 | ***1.50*** | ***0.60*** | **4** |
| Kabul | Afghanistan | 1.44 | 53 | 57 | 42 | ***1.50*** | ***0.60*** | **4** |
| Kaduna | Nigeria | 0 | NA | NA | NA | 0.10 | 0.04 | 0 |
| Kampala | Uganda | 0 | 62 | 66 | 49 | 0.56* | 0.23* | 2A |
| Karachi | Pakistan | 0 | 53 | 57 | 42 | ***1.00*** | ***0.40*** | **3** |
| Kathmandu | Nepal | 0 | 57 | 61 | 45 | ***1.73*** | ***0.69*** | **4** |
| Kavala | Greece | NA | NA | NA | NA | 1.50* | 0.60* | 4 |
| Khartoum | Sudan | 0 | 62 | 66 | 49 | 0.56* | 0.23* | 2A |
| Kigali | Rwanda | 0 | 62 | 66 | 49 | ***0.27*** | ***0.11*** | **1** |
| Kingston | Jamaica | 0 | ***68*** | ***73*** | ***54*** | ***2.65*** | ***1.06*** | **4** |
| Kinshasa | Zaire | 0 | 62 | 66 | 49 | 0.10 | 0.04 | 0 |
| Kirkuk | Iraq | 0 | 73 | 78 | 58 | ***1.23*** | ***0.49*** | **3** |
| Kolkata | India | 0 | ***59*** | ***64*** | ***47*** | 0.75* | 0.30* | 2B |
| Kolonia | Micronesia | 0 | ***51*** | ***54*** | ***40*** | 0.28* | 0.11* | 1 |
| Koror | Palu | 0 | ***57*** | ***61*** | ***45*** | 0.75* | 0.30* | 2B |
| Krakow | Poland | 2.63 | 59 | 64 | 47 | 0.56* | 0.23* | 2A |

| POST | COUNTRY | GROUND SNOW LOADS $p_g$ (kN/m²) ($p_g$ x 20.89 = psf) | ULTIMATE DESIGN WIND SPEED[2,3] (3 SECOND GUST) $V_{ult}$ (m/s) ($V_{ult}$ x 2.237 = mph) RISK CATEGORY | | BASIC WIND SPEED[4] (3 SECOND GUST) V (m/s) | MCE SPECTRAL RESPONSE ACCELERATION PARAMETER[5] | | 1997 UBC SEISMIC ZONE[6] |
|---|---|---|---|---|---|---|---|---|
| | | | II | III | | $S_S$ | $S_1$ | |
| Kuala Lumpur | Malaysia | 0 | ***53*** | ***57*** | ***42*** | 0.28* | 0.11* | 1 |
| Kuwait | Kuwait | 0 | 51 | 54 | 40 | 0.28* | 0.11* | 1 |
| Kyiv | Ukraine | 1.44 | 59 | 64 | 47 | 0.28* | 0.11* | 1 |
| La Paz | Bolivia | 3.84 | 51 | 54 | 40 | ***1.50*** | ***0.49*** | **4** |
| Lagos | Nigeria | 0 | 68 | 73 | 54 | 0.10 | 0.04 | 0 |
| Lahore | Pakistan | 0 | 71 | 76 | 56 | ***1.03*** | ***0.41*** | **2B** |
| Leipzig | Germany | 0.96 | 59 | 64 | 47 | 0.56* | 0.23* | 2A |
| Libreville | Gabon | 0 | 62 | 66 | 49 | 0.10 | 0.04 | 0 |
| Lilongwe | Malawi | 0 | 62 | 66 | 49 | 0.75* | 0.30* | 2B |
| Lima | Peru | 0 | 51 | 54 | 40 | ***1.50*** | ***0.60*** | **4** |
| Lisbon | Portugal | 0 | 62 | 66 | 49 | 0.75* | 0.30* | 2B |
| Ljubljana | Slovenia | 1.44 | 57 | 61 | 45 | 1.13* | 0.45* | 3 |
| Lome | Togo | 0 | 68 | 73 | 54 | 0.28* | 0.11* | 1 |
| London | United Kingdom | 0.96 | 62 | 66 | 49 | ***0.12*** | ***0.02*** | **1** |
| Luanda | Angola | 0 | 51 | 54 | 40 | 0.10 | 0.04 | 0 |
| Lubumbashi | Zaire | 0 | NA | NA | NA | 0.56* | 0.23* | 2A |
| Lusaka | Zambia | 0 | 51 | 54 | 40 | 0.56* | 0.23* | 2A |
| Luxembourg | Luxembourg | 0.96 | 53 | 57 | 42 | 0.28* | 0.11* | 1 |
| Lyon | France | 2.66 | 51 | 54 | 40 | 0.28* | 0.11* | 1 |
| Madrid | Spain | 1.44 | 53 | 57 | 42 | 0.10 | 0.04 | 0 |
| Majuro | Marshall Islands | 0 | ***62*** | ***66*** | ***49*** | 0.10 | 0.04 | 0 |
| Malabo | Equatorial Guinea | 0 | 62 | 66 | 49 | 0.10 | 0.04 | 0 |

| POST | COUNTRY | GROUND SNOW LOADS $p_g$ (kN/m²) ($p_g$ x 20.89 = psf) | ULTIMATE DESIGN WIND SPEED[2,3] (3 SECOND GUST) $V_{ult}$ (m/s) ($V_{ult}$ x 2.237 = mph) RISK CATEGORY | | BASIC WIND SPEED[4] (3 SECOND GUST) V (m/s) | MCE SPECTRAL RESPONSE ACCELERATION PARAMETER[5] | | 1997 UBC SEISMIC ZONE[6] |
|---|---|---|---|---|---|---|---|---|
| | | | II | III | | $S_S$ | $S_1$ | |
| Managua | Nicaragua | 0 | ***57*** | ***61*** | ***45*** | ***2.18*** | ***0.87*** | **4** |
| Manama | Bahrain | 0 | 62 | 66 | 49 | 0.10 | 0.04 | 0 |
| Manila | Philippines | 0 | ***85*** | ***91*** | ***67*** | ***1.80*** | ***0.72*** | **4** |
| Maputo | Mozambique | 0 | ***68*** | ***73*** | ***54*** | 0.28* | 0.11* | 1 |
| Maracaibo | Venezuela | 0 | NA | NA | NA | 0.75* | 0.30* | 2B |
| Marseille | France | 1.68 | 59 | 64 | 47 | 0.75* | 0.30* | 2B |
| Martinique | French West Indies | 0 | NA | NA | NA | 1.13* | 0.45* | 3 |
| Maseru | Lesotho | 0 | 62 | 66 | 49 | 0.56* | 0.23* | 2A |
| Matamoros | Mexico | 0 | ***57*** | ***61*** | ***45*** | 0.10 | 0.04 | 0 |
| Mazar-e-Sharif | Afghanistan | NA | NA | NA | NA | ***0.79*** | ***0.23*** | **2B** |
| Mazatlan | Mexico | 0 | NA | NA | NA | 0.75* | 0.30* | 2B |
| Mbabane | Swaziland | 0 | ***62*** | ***66*** | ***49*** | 0.56* | 0.23* | 2A |
| Medan | Indonesia | 0 | 51 | 54 | 40 | 1.13* | 0.45* | 3 |
| Melbourne | Australia | 0.48 | 59 | 64 | 47 | 0.28* | 0.11* | 1 |
| Merida | Mexico | 0 | ***68*** | ***73*** | ***54*** | 0.10 | 0.04 | 0 |
| Mexico City (Entire City, U.N.O.) | Mexico | 0 | 62 | 66 | 49 | 1.13* | 0.45* | 3 |
| Where Permitted by OBO | | | | | | ***0.72*** | ***0.29*** | **2A** |
| Milan | Italy | 2.63 | 51 | 54 | 40 | 0.75* | 0.30* | 2B |
| Minsk | Belarus | 1.92 | 51 | 54 | 40 | 0.10 | 0.04 | 0 |
| Mogadishu | Somalia | 0 | 62 | 66 | 49 | 0.10 | 0.04 | 0 |

| POST | COUNTRY | GROUND SNOW LOADS $p_g$ (kN/m²) ($p_g$ x 20.89 = psf) | ULTIMATE DESIGN WIND SPEED[2,3] (3 SECOND GUST) $V_{ult}$ (m/s) ($V_{ult}$ x 2.237 = mph) RISK CATEGORY | | BASIC WIND SPEED[4] (3 SECOND GUST) V (m/s) | MCE SPECTRAL RESPONSE ACCELERATION PARAMETER[5] | | 1997 UBC SEISMIC ZONE[6] |
|---|---|---|---|---|---|---|---|---|
| | | | II | III | | $S_S$ | $S_1$ | |
| Monrovia | Liberia | 0 | 73 | 78 | 58 | 0.28* | 0.11* | 1 |
| Monterrey | Mexico | 0 | 51 | 54 | 40 | 0.28* | 0.11* | 1 |
| Montevideo | Uruguay | 0 | 68 | 73 | 54 | 0.10 | 0.04 | 0 |
| Montreal | Canada | 4.55 | 51 | 54 | 40 | ***0.95*** | ***0.38*** | **2A** |
| Moroni | Comoros | 0 | NA | NA | NA | 0.56* | 0.23* | 2A |
| Moscow | Russia | 1.92 | 51 | 54 | 40 | 0.10 | 0.04 | 0 |
| Mostar | Bosnia-Herzegovina | 2.40 | 80 | 85 | 63 | 0.75* | 0.30* | 2B |
| Mosul | Iraq | 0 | 64 | 69 | 51 | ***1.18*** | ***0.47*** | **3** |
| Mumbai | India | 0 | ***59*** | ***64*** | ***47*** | ***0.95*** | ***0.38*** | **2A** |
| Munich | Germany | 1.92 | 68 | 73 | 54 | 0.28* | 0.11* | 1 |
| Muscat | Oman | 0 | 57 | 61 | 45 | 0.56* | 0.23* | 2A |
| N'Djamena | Chad | 0 | 62 | 66 | 49 | 0.10 | 0.04 | 0 |
| Nagoya | Japan | 0.24 | ***64*** | ***69*** | ***51*** | 1.50* | 0.60* | 4 |
| Naha, Okinawa | Japan | 0 | ***85*** | ***91*** | ***67*** | 1.13* | 0.45* | 3 |
| Nairobi | Kenya | 0 | 57 | 61 | 45 | 0.56* | 0.23* | 2A |
| Naples | Italy | 0 | 64 | 69 | 51 | 0.75* | 0.30* | 2B |
| Nassau | Bahamas | 0 | ***80*** | ***85*** | ***63*** | 0.10 | 0.04 | 0 |
| New Delhi | India | 0 | 59 | 64 | 47 | 0.75* | 0.30* | 2B |
| Niamey | Niger | 0 | 57 | 61 | 45 | 0.15 | 0.04 | 0 |
| Nice | France | NA | NA | NA | NA | 0.75* | 0.30* | 2B |
| Nicosia | Cyprus | 0 | 57 | 61 | 45 | 1.13* | 0.45* | 3 |
| Nogales | Mexico | 0 | 51 | 54 | 40 | 0.28* | 0.11* | 1 |

| POST | COUNTRY | GROUND SNOW LOADS $p_g$ (kN/m²) ($p_g$ x 20.89 = psf) | ULTIMATE DESIGN WIND SPEED[2,3] (3 SECOND GUST) $V_{ult}$ (m/s) ($V_{ult}$ x 2.237 = mph) RISK CATEGORY | | BASIC WIND SPEED[4] (3 SECOND GUST) V (m/s) | MCE SPECTRAL RESPONSE ACCELERATION PARAMETER[5] | | 1997 UBC SEISMIC ZONE[6] |
|---|---|---|---|---|---|---|---|---|
| | | | II | III | | $S_S$ | $S_1$ | |
| Nouakchott | Mauritania | 0 | 64 | 69 | 51 | 0.10 | 0.04 | 0 |
| Nuevo Laredo | Mexico | 0 | ***62*** | ***66*** | ***49*** | 0.10 | 0.04 | 0 |
| Oporto | Portugal | 0 | NA | NA | NA | 0.75* | 0.30* | 2B |
| Oran | Algeria | NA | NA | NA | NA | 1.50* | 0.60* | 4 |
| Osaka-Kobe | Japan | 0.24 | ***51*** | ***54*** | ***40*** | 1.50* | 0.60* | 4 |
| Oslo | Norway | 1.92 | 53 | 57 | 42 | 0.75* | 0.30* | 2B |
| Ottawa | Canada | 2.87 | 51 | 54 | 40 | ***0.70*** | ***0.28*** | **2A** |
| Ouagadougou | Burkina Faso | 0 | 62 | 66 | 49 | 0.10 | 0.04 | 0 |
| Palermo | Italy | 0 | 53 | 57 | 42 | 1.50* | 0.60* | 4 |
| Panama City | Panama | 0 | ***57*** | ***61*** | ***45*** | ***0.94*** | ***0.37*** | **2B** |
| Paramaribo | Suriname | 0 | 57 | 61 | 45 | 0.10 | 0.04 | 0 |
| Paris | France | 0.96 | 62 | 66 | 49 | 0.10 | 0.04 | 0 |
| Perth | Australia | 0 | 53 | 57 | 42 | 0.28* | 0.11* | 1 |
| Peshawar | Pakistan | 1.68 | 71 | 76 | 56 | ***1.63*** | ***0.65*** | **4** |
| Phnom Penh | Cambodia | 0 | ***51*** | ***54*** | ***40*** | 0.28* | 0.11* | 1 |
| Podgorica | Serbia-Montenegro | 2.40 | 62 | 66 | 49 | 1.38 | 0.55 | 3 |
| Ponta Delgada, Azor | Portugal | 0 | 62 | 66 | 49 | 0.75* | 0.30* | 2B |
| Port-of-Spain | Trinidad & Tobago | 0 | ***62*** | ***66*** | ***49*** | ***2.34*** | ***0.93*** | **4** |
| Port Louis | Mauritius | 0 | ***85*** | ***91*** | ***67*** | 0.10 | 0.04 | 0 |
| Port Moresby | Papua New Guinea | 0 | ***53*** | ***57*** | ***42*** | ***0.67*** | ***0.27*** | **2A** |

| POST | COUNTRY | GROUND SNOW LOADS $p_g$ (kN/m²) ($p_g$ x 20.89 = psf) | ULTIMATE DESIGN WIND SPEED[2,3] (3 SECOND GUST) $V_{ult}$ (m/s) ($V_{ult}$ x 2.237 = mph) RISK CATEGORY | | BASIC WIND SPEED[4] (3 SECOND GUST) V (m/s) | MCE SPECTRAL RESPONSE ACCELERATION PARAMETER[5] | | 1997 UBC SEISMIC ZONE[6] |
|---|---|---|---|---|---|---|---|---|
| | | | II | III | | $S_S$ | $S_1$ | |
| Port-au-Prince | Haiti | 0 | ***57*** | ***61*** | ***45*** | ***2.02*** | ***0.81*** | **4** |
| Port Said | Egypt | 0 | NA | NA | NA | 0.75* | 0.30* | 2B |
| Porto Alegre | Brazil | 0 | NA | NA | NA | 0.10 | 0.04 | 0 |
| Poznan | Poland | NA | NA | NA | NA | 0.28* | 0.11* | 1 |
| Prague | Czech Republic | 1.44 | 59 | 64 | 47 | 0.28* | 0.11* | 1 |
| Praia | Cape Verde | 0 | 68 | 73 | 54 | 0.10 | 0.04 | 0 |
| Pretoria | South Africa | 0 | 51 | 54 | 40 | 0.75* | 0.30* | 2B |
| Pristina | Serbia-Montenegro (Kosovo) | 0.96 | 57 | 61 | 45 | ***1.37*** | ***0.55*** | **3** |
| Pyongyang | North Korea | 3.83 | 64 | 69 | 51 | 0.56* | 0.23* | 2A |
| Quebec | Canada | 5.26 | 51 | 54 | 40 | ***0.70*** | ***0.28*** | **2A** |
| Quito | Ecuador | 0.24 | 51 | 54 | 40 | ***2.57*** | ***1.03*** | **4** |
| Rabat | Morocco | 0 | 57 | 61 | 45 | 0.56* | 0.23* | 2A |
| Rangoon | Burma | 0 | ***64*** | ***69*** | ***51*** | ***1.72*** | ***0.69*** | **4** |
| Recife | Brazil | 0 | 62 | 66 | 49 | 0.10 | 0.04 | 0 |
| Rennes | France | NA | NA | NA | NA | 0.28* | 0.11* | 1 |
| Reykjavik | Iceland | 1.44 | 68 | 73 | 54 | ***1.45*** | ***0.41*** | **4** |
| Rhodes | Greece | NA | NA | NA | NA | 1.13* | 0.45* | 3 |
| Riga | Latvia | 2.40 | 51 | 54 | 40 | 0.28* | 0.11* | 1 |
| Rio de Janeiro | Brazil | 0 | 62 | 66 | 49 | 0.10 | 0.04 | 0 |
| Riyadh | Saudi Arabia | 0 | 51 | 54 | 40 | 0.10 | 0.04 | 0 |
| Rome | Italy | 0.24 | 57 | 61 | 45 | 0.75* | 0.30* | 2B |
| Saipan | Saipan | 0 | 80 | 85 | 63 | 1.13* | 0.45* | 3 |

| POST | COUNTRY | GROUND SNOW LOADS $p_g$ (kN/m²) ($p_g$ x 20.89 = psf) | ULTIMATE DESIGN WIND SPEED[2,3] (3 SECOND GUST) $V_{ult}$ (m/s) ($V_{ult}$ x 2.237 = mph) RISK CATEGORY | | BASIC WIND SPEED[4] (3 SECOND GUST) V (m/s) | MCE SPECTRAL RESPONSE ACCELERATION PARAMETER[5] | | 1997 UBC SEISMIC ZONE[6] |
|---|---|---|---|---|---|---|---|---|
| | | | II | III | | $S_S$ | $S_1$ | |
| Salzburg | Austria | 1.44 | 53 | 57 | 42 | 0.75* | 0.30* | 2B |
| San Jose | Costa Rica | 0 | ***51*** | ***54*** | ***40*** | 1.13* | 0.45* | 3 |
| San Salvador | El Salvador | 0 | ***62*** | ***66*** | ***49*** | 1.50* | 0.60* | 4 |
| Sanaa | Yemen Arab Republic | 0 | 59 | 64 | 47 | ***0.50*** | ***0.20*** | **2A** |
| Santa Cruz | Bolivia | 0 | NA | NA | NA | 0.75* | 0.30* | 2B |
| Santiago | Chile | 0.24 | 51 | 54 | 40 | 1.50* | 0.60* | 4 |
| Santo Domingo | Dominican Republic | 0 | ***57*** | ***61*** | ***45*** | ***1.37*** | ***0.55*** | **4** |
| Sao Paulo | Brazil | 0 | 57 | 61 | 45 | 0.28* | 0.11* | 1 |
| Sapporo | Japan | 0.24 | 57 | 61 | 45 | ***1.38*** | ***0.55*** | **3** |
| Sarajevo | Bosnia-Herzegovina | 1.44 | 73 | 78 | 58 | ***1.35*** | ***0.54*** | **3** |
| Seoul | South Korea | 0.24 | ***51*** | ***54*** | ***40*** | 0.56* | 0.23* | 2A |
| Seville | Spain | NA | NA | NA | NA | 0.75* | 0.30* | 2B |
| Shanghai | China | 1.44 | ***57*** | ***61*** | ***45*** | 0.56* | 0.23* | 2A |
| Shenyang | China | 0.24 | 57 | 61 | 45 | 0.75* | 0.30* | 2B |
| Shiraz | Iran | NA | NA | NA | NA | 1.13* | 0.45* | 3 |
| Singapore | Singapore | 0 | ***57*** | ***61*** | ***45*** | 0.28* | 0.11* | 1 |
| Skopje | Macedonia F.Y.R.O.M. | 1.44 | 51 | 54 | 40 | ***1.38*** | ***0.55*** | **3** |
| Sofia | Bulgaria | 1.44 | 57 | 61 | 45 | ***1.00*** | ***0.40*** | **3** |
| Songkhla | Thailand | 0 | NA | NA | NA | 0.10 | 0.04 | 0 |
| Split | Croatia | NA | NA | NA | NA | 1.13* | 0.45* | 3 |

| POST | COUNTRY | GROUND SNOW LOADS $p_g$ (kN/m²) ($p_g$ x 20.89 = psf) | ULTIMATE DESIGN WIND SPEED[2,3] (3 SECOND GUST) $V_{ult}$ (m/s) ($V_{ult}$ x 2.237 = mph) RISK CATEGORY | | BASIC WIND SPEED[4] (3 SECOND GUST) V (m/s) | MCE SPECTRAL RESPONSE ACCELERATION PARAMETER[5] | | 1997 UBC SEISMIC ZONE[6] |
|---|---|---|---|---|---|---|---|---|
| | | | II | III | | $S_S$ | $S_1$ | |
| St. George's | Grenada | 0 | ***62*** | ***66*** | ***49*** | 1.13* | 0.45* | 3 |
| St. Johns | Antigua | 0 | NA | NA | NA | 1.13* | 0.45* | 3 |
| St. Petersburg | Russia | 1.92 | 51 | 54 | 40 | 0.10 | 0.06 | 0 |
| Stockholm | Sweden | 1.44 | 57 | 61 | 45 | 0.10 | 0.04 | 0 |
| Strasbourg | France | 1.44 | 53 | 57 | 42 | 0.56* | 0.23* | 2A |
| Stuttgart | Germany | NA | NA | NA | NA | 0.56* | 0.23* | 2A |
| Surabaya | Indonesia | 0 | ***59*** | ***64*** | ***47*** | ***2.56*** | ***1.02*** | **4** |
| Suva | Fiji | 0 | ***85*** | ***91*** | ***67*** | ***1.27*** | ***0.51*** | **3** |
| Sydney | Australia | 0 | 57 | 61 | 45 | 0.28* | 0.11* | 1 |
| Tabriz | Iran | NA | NA | NA | NA | 1.50* | 0.60* | 4 |
| Taipei | Taiwan | 0 | ***82*** | ***88*** | ***65*** | ***1.50*** | ***0.60*** | **4** |
| Tallinn | Estonia | 1.44 | 51 | 54 | 40 | 0.28* | 0.11* | 1 |
| Tangier | Morocco | 0 | NA | NA | NA | 1.13* | 0.45* | 3 |
| Tashkent | Uzbekistan | 1.44 | 53 | 57 | 42 | ***2.00*** | ***0.80*** | **4** |
| Tbilisi | Georgia | 1.44 | 80 | 85 | 63 | ***1.24*** | ***0.49*** | **3** |
| Tegucigalpa | Honduras | 0 | ***51*** | ***54*** | ***40*** | ***1.50*** | ***0.60*** | **4** |
| Tehran | Iran | 1.68 | 59 | 64 | 47 | 1.50* | 0.60* | 4 |
| Tel Aviv | Israel | 0 | 57 | 61 | 45 | ***0.38*** | ***0.15*** | **2A** |
| The Hague | Netherlands | 1.44 | 64 | 69 | 51 | 0.10 | 0.04 | 0 |
| Thessaloniki | Greece | 2.87 | 71 | 76 | 56 | ***1.20*** | ***0.48*** | **3** |
| Tijuana | Mexico | 0 | 62 | 66 | 49 | ***0.95*** | ***0.38*** | **3** |
| Tirana | Albania | 1.20 | 64 | 69 | 51 | 1.13* | 0.45* | 3 |
| Tokyo | Japan | 0.24 | ***68*** | ***73*** | ***54*** | ***1.50*** | ***0.60*** | **4** |

| POST | COUNTRY | GROUND SNOW LOADS $p_g$ (kN/m²) ($p_g$ x 20.89 = psf) | ULTIMATE DESIGN WIND SPEED[2,3] (3 SECOND GUST) $V_{ult}$ (m/s) ($V_{ult}$ x 2.237 = mph) RISK CATEGORY | | BASIC WIND SPEED[4] (3 SECOND GUST) V (m/s) | MCE SPECTRAL RESPONSE ACCELERATION PARAMETER[5] | | 1997 UBC SEISMIC ZONE[6] |
|---|---|---|---|---|---|---|---|---|
| | | | II | III | | $S_S$ | $S_1$ | |
| Toronto | Canada | 1.44 | 51 | 54 | 40 | 0.28* | 0.11* | 1 |
| Toulouse | France | NA | NA | NA | NA | 0.56* | 0.23* | 2A |
| Trieste | Italy | NA | NA | NA | NA | 0.75* | 0.30* | 2B |
| Tripoli | Libya | 0 | 53 | 57 | 42 | ***0.95*** | ***0.38*** | **2A** |
| Tunis | Tunisia | 0 | 62 | 66 | 49 | ***1.05*** | ***0.42*** | **3** |
| Turin | Italy | NA | NA | NA | NA | 0.75* | 0.30* | 2B |
| Udorn | Thailand | 0 | NA | NA | NA | 0.28* | 0.11* | 1 |
| Ulaanbaatar | Mongolia | 1.92 | 51 | 54 | 40 | 0.56* | 0.23* | 2A |
| Valletta | Malta | 0 | 53 | 57 | 42 | 0.56* | 0.23* | 2A |
| Valparaiso | Chile | 0 | NA | NA | NA | 1.50* | 0.60* | 4 |
| Vancouver | Canada | 1.44 | 51 | 54 | 40 | ***1.13*** | ***0.45*** | **3** |
| Vatican City | Holy See | 0.24 | 57 | 61 | 45 | 0.75* | 0.30* | 2B |
| Venice | Italy | NA | NA | NA | NA | 0.40 | 0.18 | 1 |
| Victoria | Seychelles | 0 | 64 | 69 | 51 | 0.10 | 0.04 | 0 |
| Vienna | Austria | 1.44 | 76 | 81 | 60 | 0.75* | 0.30* | 2B |
| Vientiane | Laos | 0 | ***59*** | ***64*** | ***47*** | 0.28* | 0.11* | 1 |
| Vilnius | Lithuania | 1.44 | 51 | 54 | 40 | 0.10 | 0.04 | 0 |
| Vladivostok | Russia | 1.44 | 64 | 69 | 51 | 0.28* | 0.11* | 1 |
| Warsaw | Poland | 1.44 | 51 | 54 | 40 | 0.28* | 0.11* | 1 |
| Wellington | New Zealand | 0 | 62 | 66 | 49 | 1.50* | 0.60* | 4 |
| Windhoek | Namibia | 0 | 62 | 66 | 49 | 0.10 | 0.04 | 0 |
| Winnipeg | Canada | NA | NA | NA | NA | 0.10 | 0.04 | 0 |
| Wuhan | China | NA | NA | NA | NA | 0.75* | 0.30* | 2B |

| POST | COUNTRY | GROUND SNOW LOADS $p_g$ (kN/m²) ($p_g$ x 20.89 = psf) | ULTIMATE DESIGN WIND SPEED[2,3] (3 SECOND GUST) $V_{ult}$ (m/s) ($V_{ult}$ x 2.237 = mph) RISK CATEGORY | | BASIC WIND SPEED[4] (3 SECOND GUST) V (m/s) | MCE SPECTRAL RESPONSE ACCELERATION PARAMETER[5] | | 1997 UBC SEISMIC ZONE[6] |
|---|---|---|---|---|---|---|---|---|
| | | | II | III | | $S_S$ | $S_1$ | |
| Yaounde | Cameroon | 0 | 62 | 66 | 49 | 0.10 | 0.04 | 0 |
| Yekaterinburg | Russia | 2.87 | 51 | 54 | 40 | 0.28* | 0.11* | 1 |
| Yerevan | Armenia | 1.44 | 53 | 57 | 42 | ***1.51*** | ***0.60*** | **4** |
| Yokohama | Japan | 0.24 | 68 | 73 | 54 | 1.50* | 0.60* | 4 |
| Zagreb | Croatia | 1.44 | 51 | 54 | 40 | 1.13* | 0.45* | 3 |
| Zanzibar | Tanzania | 0 | NA | NA | NA | 0.75* | 0.30* | 2B |
| Zomba | Malawi | 0 | NA | NA | NA | 1.13* | 0.45* | 3 |
| Zurich | Switzerland | 0.96 | 57 | 61 | 45 | 0.56* | 0.23* | 2A |

**Table 1609 Notes:**

Note 1: NA: Not available. Investigate local conditions and submit values to OBO/DECS/DE/CSE for approval.

Note 2: Ultimate design wind speed values ($V_{ult}$) are design 3-second gust wind speeds in meters per second (m/s) at 10 m above ground for Exposure Category C.

Note 3: Bolded and italicized wind speeds shall be considered Hurricane-Prone Regions (Tropical Cyclone). Determine if Wind-Borne Debris Region applies per IBC Section 1609.1.2.

Note 4: IBC 2000 through IBC 2009 Basic Wind Speed, these values are provided for information only. Refer to the Ultimate Design Wind Speed column.

Note 5: Bolded and italicized spectral response acceleration parameters are site-specific values, which include the large and infrequent seismic event. MCE spectral response accelerations noted with an asterisk (*) are interim, default values assigned to posts for which a site-specific seismicity update study has not yet been carried out. Determination of site-specific MCE ground motion data for these posts is in progress currently. Use these Table values only when site-specific MCE ground motion data have not been specified in the project scope of work. Contact OBO/PDCS/DE/CSE for clarification in the rare and unusual circumstances in which both SOW and Table values are provided but are different from one another.

Note 6: 1997 UBC seismic zone values are provided for reference only.

**END OF TABLE 1609**

**END OF CHAPTER IBC-16 AMENDMENTS**

# CHAPTER 18
# SOILS AND FOUNDATIONS

## SECTION 1801
## GENERAL

**Add the following new subsection:**

**1801.3 Service Life**. The minimum design service life of the structural components of the foundation system shall be 100 years.

## SECTION 1803
## GEOTECHNICAL INVESTIGATIONS

**Replace the last sentence of Section 1803.1 with the following:**

**1803.1 General** It is required that the classification and investigation of the soil shall be made by a U.S. registered design professional with at least 10 years professional experience on projects of similar nature.

## SECTION 1805
## DAMPPROOFING AND WATERPROOFING

**Add the following sentence to end of the paragraph:**

**1805.1 Where required.** Walls or portions thereof that enclose any space below grade, including but not limited to storage, office, crawl spaces, mechanical rooms, and computer rooms, shall have a foundation drainage system meeting the minimum requirements of Section 1805.4

## SECTION 1808
## FOUNDATIONS

**Replace the first sentence of Subsection 1808.8.1 with the following:**

**1808.8.1 Concrete or grout strength and mix proportioning.** Concrete or grout in foundations shall have a specified compressive strength (f'c) not less than the largest applicable value indicated in Table 1808.8.1, except refer to OBO-ICS IBC Chapter 19 for minimum specified compressive strength ($f'_c$) of concrete and grout for elements 1, 2a, and 2b and replace 4000 psi for element 5 (Micropiles) with 35 MPa.

SECTION 1810
**DEEP FOUNDATIONS**

**Insert the following Subsections:**

**1810.3.2.5.1 Protection of steel piles.** For corrosive soils and/or ground water the steel piles shall include a corrosion allowance (sacrificial metal loss). The sacrificial metal or corrosion allowance is the thickness of metal (above what is structurally required for the pile) needed to compensate for the loss of metal that will occur as the pile corrodes over the design service life of the pile. The design service life is defined in section 1801.3. The extra metal thickness is added to all surfaces of the pile exposed to the corrosive soil and/or ground water. The following minimum corrosion rate for a mildly aggressive environment shall be used: 0.025 mm (0.001 in.) per year per exposed surface. The above corrosion rate shall also be applied to piles in fill materials regardless of the corrosive environment of the soil/or ground water. For aggressive or highly aggressive environments further studies are required to determine the corrosion rate. The use of other methods of protection may be considered with approval from OBO/PDCS/DE/CSE.

**1810.3.2.5.2 Steel shell**. Provide corrosion protection of the shell in accordance with Section 1810.3.2.5.1.

**END OF CHAPTER IBC-18 AMENDMENTS**

# CHAPTER 19
# CONCRETE

## SECTION 1901
## GENERAL

**Add and adjust the following items to the end of 1901.3**

**1901.3 Construction Documents**

12. Structural drawings shall indicate top layer and bottom layer reinforcement placement for beams and two-way slabs.
13. Provide opening details specifically modified to be applicable for security walls, and walls and roof slabs designed for blast. The details shall specifically address the necessity for, or location of, diagonal bars at openings, and the treatment of interrupted bars at openings.

**Add the following subsections:**

**1901.5 Concrete Framing Systems for Structures Resisting Blast.** Unless specifically allowed otherwise by OBO/PDCS/DE, the following structural requirements shall apply.

1. Two-Way Solid Floor Slabs: Framed systems shall be two-way solid floor slabs supported on all sides by beams or bearing walls.
2. The minimum column dimension shall be 300 mm.
3. Exterior bearing walls are permissible.

## SECTION 1903
## SPECIFICATIONS FOR TESTS AND MATERIALS

**Add the following subsections:**

**1903.4 Reinforcing type.** Reinforcement shall comply with ASTM A 615/A 615M-14, Grade 420 (60) or ASTM A 706/A 706M-14, Grade 420 (60), unless specifically allowed otherwise by OBO/PDCS/DE.. Reinforcement shall (a) be manufactured by a steel mill prequalified to supply reinforcing steel for OBO projects as indicated in OBO master 033000 specification or (b) be manufactured by a steel mill where the supplied reinforcing steel is evaluated and approved by OBO per section 1903.4.1.

**1903.4.1 Variance from ASTM A615/A615M-14 or A706/A706M-14 or non-preapproved mill.** Approval by OBO is required for use of reinforcing steel other than that meeting the full requirements of ASTM A615/A615M-14 or A706/A706M-14 (including bar sizes) or reinforcing from a non-preapproved OBO mill. Evaluation of a proposed alternate reinforcing steel standard if applicable shall be made by the design structural engineer of record (EOR). Aspects identified below, of a proposed variance/substitution shall be evaluated by the design engineer of record. During constructiontesting of actual reinforcing steel shall be done by an independent testing laboratory familiar with testing reinforcing steel to ASTM requirements, accredited by

either AASHTO Material Reference Laboratory (AMRL) or International Accreditation Services (IAS), or as approved by OBO. The design structural engineer of record (EOR) shall approve test results and approve use of proposed reinforcing steel prior to submittal to OBO for evaluation. The complete evaluation shall be submitted to OBO for approval and shall include the following elements/test data.

1. Name and location (city and country) of Manufacturer (if applicable)
2. Manufacturer's Chief Metallurgist contact information (telephone and email)
3. Bar dimensions
4. Permissible variation in weights
5. Deformations (include data worksheets)
6. Tensile strength
7. Minimum yield strength
8. Maximum yield strength (if applicable per ACI 318M-11, Section 21.15)
9. Minimum ratio of tensile strength to actual yield strength
10. Specified yield strength to actual yield strength comparison
11. Elongation requirements
12. Bend requirements (indicate pin diameters)
13. Bar markings (either graphic depiction and/or photographic) including explanation of meaning of marks
14. Chemical composition limits (carbon, manganese, phosphorous, sulfur, silicon, copper, nickel, and vanadium)
15. An sample copy of the mill's tag which separates and identifies the manufacture's heat and testing identification numbers and an explanation of the elements on the mill tag.
16. A comparison between test results from the independent testing labs and manufacturer's mill certificates as applicable
17. A comparison between a proposed reinforcing steel standard and ASTM A615/A615M-14 and A706/A706M-14 as applicable
18. Evaluate criteria and method for determining yield strength (offset method, extension under load method)

SECTION 1904
**DURABILITY REQUIREMENTS**

**Add the following subsections:**

**1904.3 Service Life.** The minimum design service life (target performance expectation) of structures shall be 100 years. Service life is defined as the number of years before major restoration with minimal maintenance. Major restoration is defined as repairs requiring jack hammering or other destructive means of concrete repair preparation. It shall be assumed that no repairs or maintenance are ever possible for foundations.

**1904.4 Corrosive Environment.** Where site conditions indicate possible deleterious action on concrete because of deicing salts, soil constituents, brackish water, sea water or spray/wind transport from these sources, or other factors, such concrete shall be adequately protected by suitable materials, methods and processes. These materials, methods, and processes shall consider Surface Treatments (waterproofing coatings, waterproofing membranes, and penetrating sealers), Concrete Matrix Modifiers (low water/cement ratio, cement type, minimum cement amount, increased minimum strengths, silica fume, granulated blast-furnace slag cement, fly ash, damproofing admixtures, alternative pozzolans, latex admixtures, fourteen day moist curing), Increased Clear Cover, and Direct Steel Protection (epoxy-coated reinforcing (ASTM A 775), galvanized reinforcing (ASTM A 767), zinc and epoxy dual-coated reinforcing (ASTM A 1055), stainless steel reinforcing (ASTM A 955), corrosion inhibitors (calcium nitrate), and cathodic protection).

**1904.5 Effectiveness of Protection.** The effectiveness of protective materials, methods, or processes shall have been thoroughly established by satisfactory service life records or other evidence that demonstrates the effectiveness of such protective measures. To achieve effective protection of concrete elements, the durability requirements of ACI 318M shall be supplemented with guidance from *PCA's Design and Control of Concrete Mixtures, ACI 201.2R (Guide to Durable Concrete)*, *ACI 362.1R (Guide for Design of Durable Parking Structures)*, *ACI 365.1R (Service-Life Prediction)* and suitable numerical modeling.

**1904.6 Numerical Modeling.** For concrete in corrosive environments, computerized numerical modeling programs shall be used to predict chloride ion profile as a function of depth, time, and exposure and sulfated exposure. OBO accepts the use of Life 365 by M.D.A. Thomas and E.C. Benz for chloride ion exposure and STADIUM by SIMCO Technologies for chloride and/or sulfate exposure for quantitative determination of effectiveness, estimating service life, and comparing various protective measures. The following shall be assumed for the numerical modeling:

1. Concrete Cover. The assumed concrete cover shall be taken as the specified concrete cover minus the allowable cover tolerance as defined by ACI 117.
2. Corrosion Threshold. The assumed chloride ion content, at the reinforcing steel depth, necessary to initiate corrosion shall be taken as 0.05 percent by mass of concrete for uncoated (black) reinforcing bars.
3. Propagation Time. The corrosion propagation time shall be taken as 10 years for uncoated (black) steel reinforcement. This requires the concrete system to have a predicted time until breach of corrosion threshold of 90 years for the design 100-year service life requirement.

**1904.7 Extent of Protection.** Exterior building walls shall be considered exposed concrete unless directed otherwise by OBO.

## SECTION 1905
## MODIFICATIONS TO ACI 318-11

**Add the following subsections:**

**1905.1.8 ACI 318M-11, Section 7.6.1.** Modify ACI 318M, Section 7.6.1 to read as follows:

7.6.1 The minimum clear spacing between parallel bars in a layer shall be $1.5d_b$, but not less than 35 mm. See also 3.3.2.

**1905.1.9 ACI 318M-11, Section 7.9.1.** Modify ACI 318M, Section 7.9.1 to read as follows:

7.9.1 At connections of principal framing elements (such as beams and columns), enclosure shall be provided for anchorage of reinforcement terminating in such connections. Continuing reinforcement shall not be spliced within the beam column joint.

**1905.1.10 ACI 318M-11, Section 7.11.2.** Modify ACI 318M, Section 7.11.1 by adding the following sentence to the end:

7.11.1 Placement of top beam bars outside of the closed ties or stirrups is not allowed.

**1905.1.11 ACI 318M-11, Section 7.13.2.** Modify ACI 318M, Section 7.13.2 by adding the following subsection:

7.13.2.6 For all beams at least two corner bars shall be provided continuously both top and bottom.

**1905.1.12 ACI 318M-11, Section 10.2.2.** Modify ACI 318M, Section 10.2.2 by adding the following subsection:

10.2.2.1 The design of beams and slabs shall take into consideration the difference in depth, d, to reinforcing steel due to inner and outer layer placement.

**1905.1.13 ACI 318M-11, Section 10.3.5.** Modify ACI 318M, Section 10.3.5 by adding the following subsection:

10.3.5.2 At any section of a flexural member, for top as well as for bottom reinforcement, the reinforcement ratio shall not exceed 0.025.

**1905.1.14 ACI 318M-11, Section 10.9.1.** Replace ACI 318M, Section 10.9.1 to read as follows:

10.9.1 Area of longitudinal reinforcement, $A_{st}$, for non-composite compression members shall be not less than $0.01A_g$ or more than $0.04A_g$ if bars are required to be lap spliced (0.08 in the region of the lap), or $0.06A_g$ of section if bars are required to be mechanically spliced.

**1905.1.1.15 ACI 318M-11, Section 12.14.3.** Modify ACI 318M, Section 12.14.3 by adding the following subsection:

12.14.3.6 Where used for beam or column bars, mechanical splices shall comply with ACI Type 2 as defined by ACI 318M, Section 21.1.6 (mechanical splice shall develop in tension or compression, as required, at least $1.25f_y$ of the bar, and shall develop the specified tensile strength of the spliced bar).

## SECTION 1907
## MINIMUM SLAB PROVISIONS

**Add the following subsection:**

**1907.2 Slabs-on-grade.** Design and detail joints in slabs-on-grade in accordance with the recommendations of the *ACI Manual of Concrete Practice*: *302.1R, Guide for Concrete Floor and Slab Construction*; and *360R, Design of Slabs on Grade*. Typical joint details for slabs-on-grade shall be shown on the structural drawings, and joint locations shall be shown on structural and/or architectural plans.

**Add the following three sections:**

## SECTION 1913
## CONCRETE QUALITY, MIXING AND PLACING

**1913.1 Strength.** Concrete strength shall be based on cylinders made per *ASTM C 31* from molds conforming to *ASTM C 470* and tested in accordance *with ASTM C 39*. The design concrete strength shall not exceed 42 MPa unless specifically allowed otherwise by OBO/PDCS/DE. Minimum concrete strength (f'c) and maximum water-cementitious materials ratio (w/c) shall be as follows (unless more stringent requirements for concrete subjected to special exposure conditions or sulfate exposure govern):

1. Building Frame and Miscellaneous Structures: f'c = 30 MPa minimum at 28 days. Maximum w/c = 0.54 for non-air-entrained concrete and 0.45 for air-entrained concrete.

2. Foundations, Retaining Walls, Slab-On-Grade, and Civil Site Work: f'c = 25 MPa minimum at 28 days. Maximum w/c = 0.61 for non-air-entrained concrete and 0.52 for air-entrained concrete.

3. Mass Foundations: f'c = 20 MPa minimum at 28 days. Maximum w/c = 0.65 for non-air-entrained concrete and 0.56 for air-entrained concrete.

**1913.2 Consolidation.** Design reinforcing steel to allow for internal vibration of the concrete. Openings in the reinforcement of 100 mm by 100 mm minimum and spaced at 600 mm each way shall be provided for this purpose. See ACI 309 Committee Report, "Guide for the Consolidation of Concrete", ACI Materials Journal, Sep-Oct 1987, Vol. 84, No. 5, page 410 for additional information.

## SECTION 1914
## DETAILS OF REINFORCEMENT

**19141 Configuration and Assembly of the Reinforcing Steel System.** The designer shall ensure that the configuration and assembly of the complete reinforcing system will accommodate placement of reinforcing steel in the most heavily reinforced beam/column joints, wall/window openings, and column splice zones within the tolerances specified in the code and supplement.

## SECTION 1915
## JOINT REQUIREMENTS

**1915.1 Exterior Building Walls.** The designer shall show all joint locations on the structural drawings, and shall address crack control on the structural drawings and in the specifications. Methods of crack control for structural concrete walls shall be in accordance with the recommendations of *ACI 224R, Control of Cracking in Concrete Structures*. Methods of crack control for architectural concrete shall be in accordance with the recommendations of *ACI 303R, Guide to Cast-In-Place Architectural Concrete Practice*. Concrete that is exposed, painted, skim coated, covered with stucco, or otherwise covered with a material that is directly adhered to the concrete, shall be considered as architectural concrete.

**1915.2 Site Walls.** Provide control joints spaced not greater than 6.00 m on center, and expansion joints not greater than 30.00 m on center. Provide a joint at all steps in wall elevation. Control joint and expansion joint locations shall be shown on the site plan drawings.

**END OF CHAPTER IBC-19 AMENDMENTS**

# CHAPTER 22
# STEEL

## SECTION 2201
## GENERAL

**Add the following subsection:**

**2201.2 Steel Framing Systems**, where allowed by OBO, shall meet the following requirements:

**2201.2.1 Primary Members** (main beams, columns, and girders) shall consist of hot-rolled structural shapes (tube steel sections excepted). The shapes shall be doubly symmetrical, have a constant depth, and be "compact" according the AISC definition.

**2201.2.2 Secondary Structural Members** may consist of hot-rolled or cold-formed structural steel. Main secondary members shall be doubly symmetrical and of constant depth.

**2201.2.3 Primary Structural Framing Connections** shall be either (1) shop-welded and field bolted, or (2) shop-bolted and field-bolted.

**2201.2.4 Floor Slabs** shall be solid and supported on all sides by beams, including slabs using a steel deck.

## SECTION 2205
## STRUCTURAL STEEL

**Add the following subsections:**

**2205.1.1 Hot-Rolled Shapes** shall have nominal yield strength between 250 MPa (36 ksi) to 350 MPa (50 ksi) and conform to ASTM A36 or ASTM A992.

**2205.1.2 Structural Steel Plate** shall have nominal yield strength between 250 MPa (36 ksi) to 350 MPa (50 ksi) and conform to ASTM A36.

**2205.1.3 Cold-Formed Steel Tubes** shall have a nominal yield stress between 290 MPa (42 ksi) to 320 MPa (46 ksi) and conform to ASTM A500.

**Add the following sentence to the end of the subsection:**

**2205.2.2 Seismic Design Category D, E or F.** The use of concentric braced frames to resist seismic forces is not allowed.

## SECTION 2209
## COLD-FORMED STEEL

**Add the following subsection:**

**2209.1.1 Cold-Formed Steel** (except for steel tubes) shall meet or exceed the requirements of *ASTM A446*, Grade B.

**END OF CHAPTER IBC-22 AMENDMENTS**

# CHAPTER 24
# GLASS AND GLAZING

## SECTION 2405
## SLOPED GLAZING AND SKYLIGHTS

**Add the following subsection:**

**2405.6 Fall protection.** All skylight openings shall be equipped with a protective screen to prevent falls through the skylight.

**Exception.** Where directed by OBO, provided a fixed guard on all exposed sides in accordance Chapter 10 Guards.

**2405.6.1 Protective screen at skylights.** Screens shall be constructed and attached to meet the following

1. Withstand a load of 90.0 kg (200 pounds) applied perpendicular to any point on the screen
2. Limit screen deflection under applied load, to prevent screen from transferring load into skylight glazing system.

## SECTION 2410
## BLAST RESISTANCE REQUIREMENTS

**Add the following section:**

**2410.1 General.** The following constitutes additional requirements for the blast design of windows in general as well as specific criteria associated with various glazing products. Blast resistant windows may be either conventional framed or muntin framed window systems. Muntin windows are windows that use special structural members, called muntins, mounted to the window frame flush to the inside face of the glass. These muntins act as restraints to the laminated glass. A qualified blast consultant shall be tasked with producing a rational analysis and design of all window components.

**2410.2 Rebound** shall be considered in the design of the frame and anchorage system. For muntin window systems, rebound forces shall be discounted.

**2410.3 Frames/Anchorage Systems.** Muntin window frames shall be designed using the procedure outlined in Technical Report Number 01.01 (Revision A) by the Bureau of Diplomatic Security and automated in the computer code WAMuntin. When reinforced concrete is used for exterior walls, priority shall be given to the use of an embedded plate assembly around the rough opening for the attachment of any window resisting blast. For infill walls, other attachment schemes may be used. ACI 318 Appendix D shall be used for the design of all welded studs and concrete anchors.

**2410.4 FE/BR Glass-Clad Polycarbonate Systems.** One method of meeting the forced-entry/ballistic resistance requirement is by using a glazing system consisting of many layers of glass laminated together with polycarbonate. Test data and theory to predict the blast capacity of such glazing systems is a controversial area. In addition, the long-term performance of such products when exposed to the harsh environment of some overseas sites is unknown with respect to delamination and UV degradation. Unless directed otherwise by OBO/PDCS/DE/CSE, the methodologies outlined in the computer code WINLAC shall be used for the blast design of polycarbonate glazings.

**2410.5 Uncaptured Open Bite Frames with Structural Silicone** Special criteria pertains to frames of this type as detailed below.

1. The effect of negative phase blast forces must be considered as contributing to the tendency of the glass to overmatch the silicone and detach from the curtain wall framing elements. In accordance with traditional blast design the negative phase forces must not be considered as precluding the inbound travel of the glazing.
2. The load applied to the structural silicone for both inbound and outbound conditions is shown in Figure 1. The silicone bond of the glass to the frame must be checked for all load conditions resulting from inbound and outbound loading and movement. On inbound loading the loading / movement includes shear (sliding), moment (prying), and compression. During outbound loading / movement there is a reversal of shear and moment with the normal force changing to tension. Note that near the corners of the opening there is a localized effect that results in a different combination of load direction.
3. The analysis of the silicone adhered system must account for the range of possible reactions produced by differing glass strengths. Silicone shear must be validated with the in-plane forces generated by WinGard derived 1 out of 1000 "weak" glass. Silicone tension must be validated with respect to 750 out of 1000 "strong" glass.
4. Stresses in the structural silicone shall be calculated from load transfer through the silicone where the silicone bond is primary to retaining the glass in the frame (e.g., rebound condition). Maximum tensile stress shall be limited to Ft/1.25 (Ft = ultimate tensile stress). In addition, the strain in the silicone shall be calculated from movement of the glass relative to the frame (e.g. maximum inbound glass deflection with consideration for sliding and prying). The maximum strain due to joint movement shall be limited to 0.5*St (St = strain at Ft). It is preferred that high strain rate stress strain data be used in the evaluation. Static data may be used if it can be demonstrated that the results are conservative as compared with high strain rate data.
5. Calculations and analysis shall consider the direct interaction of a coupled system consisting of glazing, silicone and framing to validate the performance of the uncaptured silicone glazed curtain wall system. This analysis should include material and geometrical nonlinearities including the effects of global stability, local buckling, and high strain rate effects. The transient dynamic characteristics of the application of blast loading shall be explicitly analyzed to include pressure time histories with both positive and negative phases. Piecewise linear curves may be used to represent the pressure curves. This analysis shall include glazing, silicone, framing, and connections. The fidelity of the calculations presented in this analysis shall capture the localized effect of buckling, tearing, and load transfer through connections including the structural silicone.

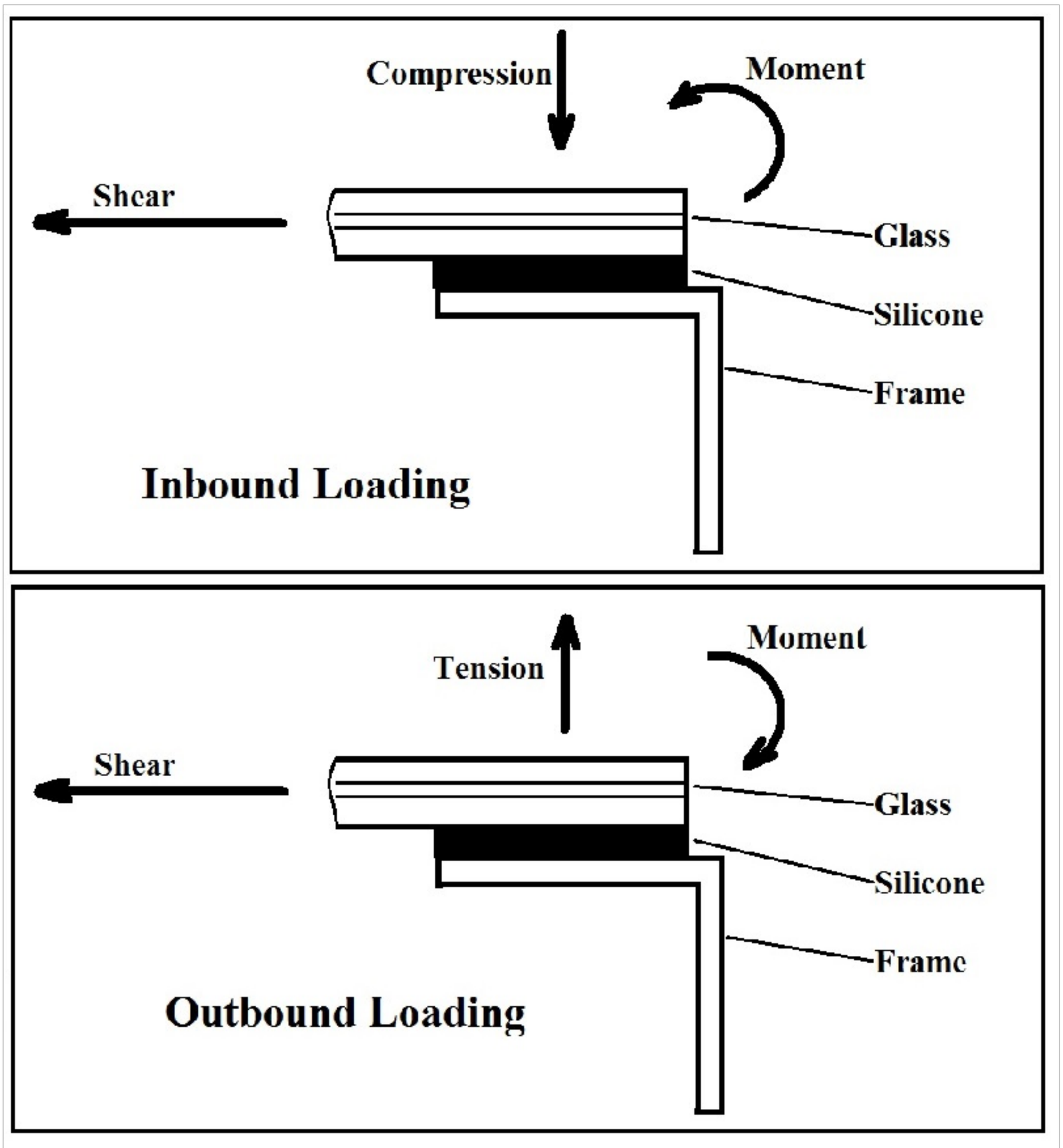


Figure 1.

**2410.6 Computer Codes.** OBO uses blast window design methodologies developed by the Department of Defense and the Bureau of Diplomatic Security and automated in the computer codes "WINLAC" and "WAMuntin". Copies of these computer codes will be provided to the A/E by OBO/PDCS/DE/CSE through written request to the COTR by the A/E. The use of the computer code 'WINGARD', developed by the General Services Administration, and 'HAZL', developed by the Corps of Engineers, are also acceptable as substitutes to WINLAC. However, when these alternate codes are used, default design parameters must be changed to be the same as those assumed in WINLAC (see the 'OBO Glazing Parameters' section).. Blast design of all fenestration shall follow closely the methodology contained therein. Versions of WINGARD and HAZL that are not commercially available shall not be used without OBO/PDCS/DE/CSE approval.

**2410.7 OBO Glazing Parameters**

**For sizing glazing layup:**

Annealed glass – 8 breaks per thousand (static and dynamic)

Strengthened and tempered glass – 1 break per thousand (static and dynamic)

**For frame design:**

All glass – use 750 breaks per thousand (static and dynamic)

**For sizing layup and frame design:**

Polycarbonate and Noviflex – ductility factor of 2

For Sentry Guard interlayer (elastic/plastic properties)

Young's Modulus = 30 ksi

Poisson's Ratio = 0.5

Elongation at Break = 0.5

Allowable Tensile Strength = 4,000 psi

Unit Weight = 58.8 lbs/ft3

**2410.8 Glazing Types.** All exterior windows not designed for FE/BR resistance shall be sized to meet blast requirements using laminated glazing of either fully thermally tempered or heat strengthened glass meeting the requirements of ANSI Z97.1. Substitution of other glazing products such as polycarbonate, custom assemblies of polycarbonate, and chemically strengthened glass, will only be considered on a case-by-case basis with approval of OBO and DS.

**2410.9 Skylights,** roof monitors, windows on walls facing interior courtyards open to the sky, and similar window assemblies shall be designed in accordance with the analysis procedures cited for ordinary exterior windows. Muntin windows are not allowed for skylight applications. A qualified blast consultant shall perform the analysis and design of such assemblies.

**2410.10 Doors.** Unless directed otherwise by OBO, for all buildings requiring blast resistant glazing, the glazing of all exterior doors that have no security rating shall be blast resistant and the door frames shall be designed to resist the blast capacity of the glazing.

**2410.1.11 Blast Tests.** In lieu of analysis, the results of blast tests, by an independent testing agency, shall be provided as justification of the blast window and skylight design. OBO reserves the right to reject test data considered insufficient.

**END OF CHAPTER IBC-24 AMENDMENTS**

# CHAPTER 27
# ELECTRICAL

## SECTION 2702
## EMERGENCY AND STANDBY POWER SYSTEMS

**Delete the subsection in its entirety and replace with the following:**

**2702.2 Where Required.** If emergency power is provided by generator, the generator shall automatically start, and transfer all systems to emergency power, within 10 seconds for single/dual generator system, and for larger multiple generator systems within 30 seconds of failure of the normal power supply. Emergency power shall be provided to the following systems:

**2702.2.1 Fire Detection, Alarm and Supervisory System.**

**2702.2.2 Exit Signs.** Emergency power shall be provided for exit signs in accordance with Chapter 10

**2702.2.3 Means of Egress Illumination.** Emergency power shall be provided for exit signs in accordance with Chapter 10

**2702.2.4 Electric Fire Pumps.**

**2702.2.5 Elevators.** Fire service elevators and elevators that are part of an accessible means of egress in accordance with Chapter 10. Standby power for elevators shall be provided as set forth in Section 3003.1.

**2702.2.6 Mechanical Smoke Removal Systems.**

**END OF CHAPTER IBC-27 AMENDMENTS**

# CHAPTER 29
# PLUMBING SYSTEMS

## SECTION 2902
## MINIMUM PLUMBING FACILITIES

**Add the following to the end of this paragraph:**

**2902.1 Minimum Number of Fixtures.** The chancery shall be treated as four distinct areas for the purposes of plumbing fixture allocation. These four sections are: Public Access Area (PAA), General Work Area (GWA), Controlled Access Area (CAA), and core area.

**Add the following subsection:**

**2902.6 Emergency Eyewash Stations.** See OBO-ICS IPC Section 411 for emergency eyewash station requirements.

**END OF CHAPTER IBC-29 AMENDMENTS**

# CHAPTER 30
# ELEVATORS AND CONVEYING SYSTEMS

## SECTION 3001
## GENERAL

**Delete Subsection 3001.2 and replace with the following:**

**3001.2 Referenced standards.** The design, construction, installation, alteration, repair and maintenance of elevators and conveying systems shall conform to the elevator code identified in project-specific information.

**Delete Subsection 3001.3 and replace with the following:**

**3001.3 Accessibility.** Passenger elevators required to be accessible shall be designed, in accordance with OBO-ICS IBC Chapter 11.

**3001.4 Authority Having Jurisdiction.** The Authority Having Jurisdiction for elevators and conveying systems is OBO/CFSM/FAC/PS (ElevatorSupport@state.gov).

## SECTION 3002
## HOISTWAY ENCLOSURES

**Delete Subsection 3002.1.1 and replace with the following:**

**3002.1.1 Opening protectives.** Openings in hoistway enclosures shall be protected as required in Chapter 7, but in no case, shall the minimum fire resistance rating of all hoistway enclosure doors and frames be less than 90 minutes. This requirement shall apply regardless of the referenced standard identified in accordance with Section 3001.2.

> **Exception.** The elevator car doors and the associated hoistway enclosure doors at the floor level designated for recall in accordance with Section 3003.2 shall be permitted to remain open during Phase I Emergency Recall Operation.

**Add the following subsections:**

**3002.9 Electrical Equipment and Wiring.** All electrical equipment and wiring shall conform to the Electrical Code of OBO.

**3002.10 Equipment permitted in hoistway.** Only electrical wiring, raceways, and cables used directly in connection with the elevator, including wiring for signals, for communication with the car, for lighting, heating, air conditioning, and ventilating the car, hoistway and/or machine room, for fire detection and suppression systems, and for pit sump pumps, shall be permitted to be installed inside the hoistway.

**3002.12 Elevator controller and auxiliary fire alarm relay location.** Controllers and auxiliary fire alarm relay shall be located where accessible without entering a hoistway.

SECTION 3003
**EMERGENCY OPERATIONS**

**Add the following subsection:**

**3003.4 Emergency Communication.** Provide emergency communication within each cab:

1. Hands-free telephone station, with an automatic dialer.

2. Telephone shall be flush-mounted on the car-operating panel at a maximum of 1220 mm above the floor.

3. Telephone shall be located behind a perforated grille and connected to a programmable autodialer located with the controller.

4. Auto-dialer shall be equipped with a solid state charger unit that will automatically provide emergency power within 10 seconds in the event of failure of the normal power supply.

5. Auto-dialer shall be programmed to connect first to Post One, then local emergency services.

6. Telephone shall be capable of sending and receiving calls through a telephone line in the machine room.

7. Provide a Public Address system speaker in each elevator car and machine room.

**3003.5 Elevator Controls.** Elevator controls shall automatically reboot in the event of a power failure. The design shall include a telephone with jack adjacent (>1M <3M) to each elevator controller to be used for troubleshooting and local reprogramming.

**END OF CHAPTER IBC-30 AMENDMENTS**

# CHAPTER 31
# SPECIAL CONSTRUCTION

## SECTION 3107
## SIGNS

**Replace Section 3107 with the following:**

**3107.1 Building Signage.** The *OBO Signage Standards* in OBO-ICS IBC Appendix H, Section H116 provide unified identity standards and protection for the safety of occupants of a U.S. Mission Building. The building interior signage package shall conform to the sample sign types and schedules provided in Section H116. When the building is part of a compound, building signage shall be coordinated with the site signage package required by OBO-ICS IZC Section 1010.

## SECTION 3109
## SWIMMING POOL ENCLOSURES AND SAFETY DEVICES

**Delete the Section in its entirety and replace with the following:**

**3109.1 Scope.** The design, construction, alteration, movement, renovation, replacement, repair and maintenance of enclosures and safety devices for aquatic vessels shall conform to the requirements of the *OBO Swimming Pool And Spa Code*.

**3109.1.1** The design, construction, alteration, movement, renovation, replacement, repair and maintenance of in-ground pools shall conform to the requirements of the *OBO Swimming Pool And Spa Code*.

## SECTION 3115
## NON-PERMANENT FACILITIES

**Add the following section**

**3115.1 General.** The provisions of this section shall apply to structures designated by OBO as non-permanent facilities intended for occupancy for a period greater than 180 days and not to exceed five years. These structures shall comply with the applicable sections of this code.

**3115.1.1 Permit required**. Non-permanent facilities shall not be erected, operated, or maintained for any purpose without obtaining a permit from the OBO authority having jurisdiction.

**3115.2 Construction documents.** A permit application and construction documents shall be submitted for each installation of non-permanent structures. The construction documents shall include a site plan indicating the location of non-permanent facility and documents prepared or assembled for describing the design, and physical characteristics of the elements of the project necessary for obtaining a building permit.

**3115.3 Certificate of Occupancy.** Certificate of occupancy for non-permanent facilities will be valid until either of the following, whichever comes first:

1. Five years; or

2. Upon substantial completion of the permanent structure intended to accommodate the functions of the non-permanent facilities.

**3115.4 Maximum height.** Non-permanent facilities shall not exceed one story in height.

**Exceptions:**

1. Office occupancies shall not exceed two stories in height.
2. Residential occupancies shall not exceed two stories in height.

**3115.5 Minimum separation distances.** Non-permanent facilities shall be located to provide the following minimum separation distances:

1. Provide a minimum of 6000 mm clear for fire department access on one side. Structures separated by 6000 mm may share a common fire department access.
2. Provide a minimum 3000 mm on clear all other sides.

**3115.6 Means of egress.** Non-permanent facilities shall conform to the means of egress requirements in Chapter 10 and shall have a maximum travel distance of 30 m.

**3115.6.1. Doors.**

**3115.6.1.1 Fire-resistance rating.** Exterior doors shall have a minimum 1/3-hour (20 minute) fire door rating.

**3115.6.1.2 Closers.** Exterior doors and interior doors that are part of the egress system shall be self- or automatic-closing in accordance with Section 716.

**3115.6.1.3 Interior door construction.** Interior doors shall be non-combustible.

**3115.6.1.2 Residential requirements.**

**3115.6.1.2.1 Occupancy load..** The maximum number of occupants shall not exceed seven per story in any housing cluster.

**3115.6.1.2.2 Separation distance.** Each housing cluster shall be provided with the minimum separation distances identified in Section 3115.5.

**3115.6.1.2.3 Egress stairs.** A minimum of two exterior egress stairs shall be installed for every two story housing cluster.

**Exception.** A maximum of two housing clusters may share one common egress stair provided that each cluster also has an independent egress stair located at the end opposite the common egress stair.

**3115.7 Fire Protection Systems.** Non-permanent facilities shall be equipped throughout with an automatic sprinkler system in accordance with Chapter 9 of the Fire Code of Overseas Buildings Operations, NFPA13, and as required in Sections 3115.7.1 through Sections 3115.7.5.

**3115.7.1** Where non-permanent facilities are required to be forced entry/ballistic resistant, refer to Chapter 4 - Special Detailed Requirements Based On Use And Occupancy for fire protection requirements for windowless buildings.

**3115.7.2 Automatic sprinkler system.** Non-permanent housing units shall be protected with automatic sprinkler systems in accordance with NFPA 13R.

**3115.7.2 .1 Sprinkler heads.** Automatic fire sprinkler systems shall be equipped with quick reaction sprinkler heads.

**3115.7.3 Supervisory service.** Fire protection systems shall be monitored by a supervising station located at Post 1 in accordance with NFPA 72.

**3115.7.4 Smoke alarms.** Non-permanent housing units shall be protected with listed multiple-station residential smoke alarms capable of initiating the alarms of all units in the residential cluster.

**3115.7.5 Fire pump.** Fire pump and water supply for non-permanent facilities shall be sufficient to provide for conformance with NFPA 20. Validation of the sufficiency of these systems must be obtained from OBO/OPS/FIR for each project. In addition, materials shall not adversely otherwise affect the health of occupants.

**3115.8 Prohibited materials.** The following materials are not permitted to be used in the construction or furnishing of non-permanent facilities;

1. Pressed wood, engineered wood, material made from wood veneers, particles, or wood fibers bonded together with an adhesive under heat and pressure.

2. Plastic furniture.

3. Locally manufactured combustible materials that do not comply with the flame spread and smoke developed requirements of the *OBO Fire Code* Chapter 8.

4. Products or construction using formaldehyde (including paints and adhesives).

**3115.9 Electrical requirements.**

**3115.9.1 Electrical code.** Installation, interior wiring and appliance installations shall conform to the *OBO Electrical Code*.

**3115.9.2 Exhaust fans**. Installation shall comply with the following:

1. All fans shall be wired to a switch that operates in conjunction with the lighting.

2. Fans in serving restrooms, shower facilities and areas requiring forced ventilation shall not be wired to operate continuously.

**3115.10 Cooking appliances.** Cooking appliances are prohibited in non-permanent residential facilities.

**3115.11 Emergency Planning and Preparedness.** Refer to *the OBO Fire Code*, Chapter 4 for requirements.

**END OF CHAPTER IBC-31 AMENDMENTS**

# CHAPTER 34
# EXISTING STRUCTURES

## SECTION 3411
## ACCESSIBILITY FOR EXISTING BUILDINGS

**Delete the section in its entirety and replace with the following**

**3411.1 Scope.** Existing DOS buildings and facilities, whether DOS owned or leased, shall conform to accessibility standards in OBO-ICS IBC Section 1101.1.

**Exception.** No new alterations are required of existing elements or spaces previously constructed or altered in compliance with *UFAS* or earlier standards issued pursuant to the Architectural Barriers Act of 1968, as amended.

## SECTION 3420
## PHYSICAL SECURITY FOR EXISTING BUILDINGS

**Add the following Section:**

**3420.1 General.** The provisions of this section apply to "Existing Office Buildings" (EOB) and "Newly Acquired Buildings" (NAB) for U.S. Diplomatic Mission Buildings overseas.

In most cases the physical security criteria for new construction will apply, however this section addresses the criteria that uniquely applies to EOB and NAB structures. Project Specific approved exceptions will be stated in project scope of work (SOW). The introduction to each of the building types in this section identifies the applicability of requirements. This section identifies physical security requirements for the following building types:

1. Existing Office Building (EOB): A structure or facility is considered an existing office building (EOB) if one of the following criteria is true. [See Section 3420.2 for criteria].

DOS-designed office buildings or compounds which were at the 35% design development stage prior to July 1991.

Office buildings or compound was not designed by DOS and which was acquired through purchase, lease, or other means prior to July 1991.

2. Newly Acquired Building (NAB): A structure or facility is considered a newly acquired building (NAB) if an office building or compound was not constructed by or on behalf of the USG which was acquired by purchase, lease, or other means, subsequent to June 1991. [See Section 3420.3 for criteria].

3. All other structures or facilities are considered New Office Buildings (NOB). Section 3420 would not apply.

**3420.2 Definitions.**

**LEGAL CONSTRAINT**. Zoning laws and similar ordinances of the host country that may limit the ability to implement the standard criteria. Efforts of post and the host government should be pursued before considering it a legal constraint.

**MAJOR RENOVATION.** If not otherwise stated in the Scope of Work, see definition of SUBSTANTIAL IMPROVEMENT in IBC.

**MAXIMUM EXTENT FEASABLE.** Criteria should be met. The only exceptions for not complying with the standard should be based on Physical limitations, Legal constraints, or Practicality. All exceptions should be coordinated and verified with OBO. Supporting documentation should be provided.

**MAXIMUM EXTENT POSSIBLE.** [see MAXIMUM EXTENT FEASABLE]

**PHYSICAL LIMITATION.** Physical Limitation refers to structural, electrical, and mechanical limitations of the building. It can also apply to setback limitations.

**PRACTICALITY**. If the cost of meeting standard criteria equals or closely equals the replacement value of the building, the net gain in security over existing condition must be weighed against the threat and the cost.

**VULNERABILITY STUDY**. When it is impractical t produce a building upgrade to the full extent of the required criteria, the blast vulnerability study will address feasible upgrades that mitigate lesser threats.

**3420.3 Existing Office Building (EOB).**

**3420.3.1 Setback.** Setback is the minimum distance a building may be located from the perimeter barrier, as measured from the interior of the perimeter barrier to the building exterior. To the maximum extent possible, provide the following minimum setbacks. Exceptions should be coordinated and verified with OBO. [Supersedes ICS-IZC, Chapter 8, 603.5]

1. 30.5m (100 feet) setback for office building structures, including annexes.
2. 30.5m (100feet) setback for on-compound housing.
3. 6m setback /clear zone for warehouse (no offices located within).

**3420.3.2 Employee Parking.** Locate all on compound parking a minimum of 15 m from the exterior of office building(s). [Supersedes ICS-IZC, Chapter 8, 801.2.4, #5]

**3420.3.3 Clear Zone.** To the maximum extent possible, provide 6 meter clear zone per ICS-IZC 603.7. Exceptions should be coordinated and verified with OBO.

**3420.3.4 Blast.** A blast vulnerability study will be required for the following project types to identify specific recommendations and upgrades to mitigate the effects of blast. The approved study by OBO will become the criteria for that specific project. Other project types do not require vulnerability study. [Supersedes ICS-IBC, Chapter 4, 422.2.9.1.2]

1. Major Façade or Window and seismic renovation
2. Major Building Renovations – See Definition of *Substantial Improvement*

**3420.3.5 Building Exterior.** Provide 15-minute FE protection for exterior walls of all building that contain office functions. This applies with 5.0 meters above grade or accessible platform. [Supersedes ICS-IBC, Chapter 4, 422.2.9.1.1]

**3420.1.5.1 Doors.** Exterior doors should provide 15 minute FE protection.

**3420.1.5.2 Windows.** Exterior window or window openings should provide 15 minute FE protection.

**3420.1.5.3 Exterior Window Glazing.** One of the following applies for major renovations.

1. Exterior laminated windows composed of thermally tempered glazing or heat-strengthened glass.

   -- Or –

2. Treat existing glazing with 0.2mm (8MIL) Shatter-Resistant Window Film. (Existing windows only)

Exception: Areas that provide 15-minute FE/BR resistant protection.

**3420.3.6 Interior Glazing Type**. [Supersedes ICS-IBC, Chapter 4, 422.2.7.1] One of the following applies:

1. Laminated glass composed of thermally tempered glazing or heat-strengthened glass.

   -- Or –

2. Treat existing glazing with 0.2mm (8MIL) Shatter-Resistant Window Film. (Existing windows only)

**3420.4 Newly Acquired Building (NAB).**

**3420.4.1 Setback.** Same requirement as NOB [ICS-IZC, Chapter 8, 603.5]

**3420.4.2 Employee Parking.** Locate all on compound parking a minimum of 15 m from the exterior of office building(s). [Supersedes ICS-IZC, Chapter 8, 801.2.4, #5]

**3420.4.3 Clear Zone.** Same requirement as NOB

**3420.4.4 Blast.** A blast vulnerability study will be required to identify specific recommendations and upgrades to mitigate the effects of blast. The approved study by OBO will become the criteria for that specific project. [Supersedes ICS-IBC, Chapter 4, 422.2.9.1.2]

**3420.4.5 Building Exterior.** Provide 15-minute FE protection for exterior walls of all building that contain office functions. This applies with 5.0 meters above grade or accessible platform. [Supersedes ICS-IBC, Chapter 4, 422.2.9.1.1]

**3420.4.5.1 Doors.** Exterior doors should provide 15 minute FE protection.

**3420.4.5.2 Windows.** Exterior windows or window openings should provide 15 minute FE protection.

**3420.4.5.3 Exterior Window Glazing.** One of the following applies for major renovations.

1. Exterior laminated windows composed of thermally tempered glazing or heat-strengthened glass.

   -- Or –

2. Treat existing glazing with 0.2mm (8MIL) Shatter-Resistant Window Film. (Existing windows only)

Exception: Areas that provide 15-minute FE/BR resistant protection.

**3420.4.6 Interior Glazing Type**. [Supersedes ICS-IBC, Chapter 4, 422.2.7.1] One of the following applies:

1. Laminated glass composed of thermally tempered glazing or heat-strengthened glass.

   -- Or –

2. Treat existing glazing with 0.2mm (8MIL) Shatter-Resistant Window Film. (Existing windows only)

**END OF CHAPTER IBC-34 AMENDMENTS**

# CHAPTER 35
# REFERENCED STANDARDS

## ADDITIONAL STANDARDS REFERENCED BY OBO

**Add the additional standards for organizations included in IBC Chapter 35:**

**ACI.**
*ACI Concrete Detailing Manual*, latest edition.

**AISC**
*AISC Steel Detailing Manual*, latest edition.

**ANSI**
*ANSI X3.151, Bond Papers and Index Bristols* – Common Sheet Sizes

**ASCE**
*Design of Structures to Resist Nuclear Weapons Effects, Manual No. 42*, 1985, page 179.

**ASME**
*ASME/ANSI Standard V32.2.4, Graphic Symbols for Heating, Ventilating, and Air Conditioning*
*ASME A17.2.1 – Inspector's Manual for Electric Elevators*
*ASME-QEI-1 – Standard for the Qualification of Elevator Inspectors*

**ASTM**
*ASTM E 380-91*, *Standard Practice for Use of the International System of Units (SI) (the Modern Metric System)*.

**Add the additional standards for organizations and publishers not included in IBC Chapter 35:**

American Institute of Architects, *Architectural Graphic Standards*, American Institute of Architects; John Wiley & Sons, Inc.

Architects Institute of America, *CAD Layer Guide*, latest edition.

Construction Subcommittee of the Metrication Operating Committee of the Interagency Council on Metric Policy, *Metric Guide for Federal Construction*, prepared by the published by the National Institute of Buildings Sciences, Washington, DC.

GSA. *Fed-Std-376B, Preferred Metric Units For General Use By The Federal Government*.

McGraw Hill Book Company; Biggs, John M., *Introduction to Structural Dynamics*, New York, NY, page 223.

Blume, Newmark, and Corning, *Design of Multistory R/C Buildings for Earthquakes*, page 90.

U.S. Department of the Army, *Design and Analysis of Hardened Structures to Conventional Weapons, Technical Manual TM5-855-1*, Washington, DC.

U.S. Department of the Army, *Design of Structures to Resist the Effects of Accidental Explosions, Volumes 1-6, Special Publication TM5-1300*.

U.S. Department of the Army, *Security Engineering Final Design, Volume 3, Technical Manual TM5-853-3*.

U.S. Department of Transportation, *Technical Manual for Simplified Computer Model of Air Blast Effects on Building Walls (BLAST)*.

Department of State, Bureau of Diplomatic Security, Physical Security Division, *Blast Resistant Structural Muntin Window System, Technical Report DS/PSP/PSD – TR# 01.01, Revision A*, November 2001.

U.S. Department of State, Bureau of Diplomatic Security, Physical Security Division, Standards Development and Implementation Branch, *Steel Stud Wall/Window Retrofit: A Blast Mitigation System, Technical Information Bulletin DS/PSD/SDI – TIB # 01.01*, February 2001.

U.S. Department of State, Bureau of Diplomatic Security, Physical Security Division, *Steel-Backed Gypsum Board Wall Retrofit for Blast Mitigation, Technical Information Bulletin DS/PSP/PSD – TIB # 01.05*, September 2001.

U.S. Department of State, Bureau of Diplomatic Security, Physical Security Division, *Modular In- Walls for Blast Mitigation, Technical Information Bulletin DS/PSP/PSD – TIB # 02.02*, May 2002.

ADA and ABA "Accessibility Guidelines for Buildings and Facilities", written by the U.S. Access Board, published in the Federal Register on July 23rd, 2004. OBO will fall under the ABA provisions (Part II) rather than the ADA provisions (Part I) along with the common Part III provisions

**END OF CHAPTER IBC-35 AMENDMENTS**

# APPENDIX H
# SIGNS

## SECTION H105
## DESIGN AND CONSTRUCTION

**Delete subsection H105.2 in its entirety and replace with the following:**

**H105.2 Permits, drawings and specifications.** Refer to OBO-ICS IBC Chapter 1 for requirements.

**Delete subsection H105.5 in its entirety and replace with the following:**

**H105.5 Working stresses.** Not adopted.

## SECTION H104
## ELECTRICAL

**H104.1 Illumination.** A sign shall not be illuminated by other than electrical means, and electrical devices and wiring shall be installed in accordance with the requirements of the OBO *Electrical Code*. Any open spark or flame shall not be used for display purposes unless specifically approved.

## SECTION H108
## ANIMATED DEVICES

**Delete Section H108 in its entirety and replace with the following:**

**H108.1 Animated devices.** Animated devices are not permitted.

## SECTION H110
## ROOF SIGNS

**Delete Section H110 in its entirety and replace with the following:**

**H110.1 Roof signs.** Roof signs are not permitted.

SECTION H113
**MARQUEE SIGNS**

**Delete Section H113 in its entirety and replace with the following:**

**H113.1 Marquee signs.** Marquee signs are not permitted.

**END OF APPENDIX H AMENDMENTS**

# APPENDIX J
# GRADING

## SECTION J106
## EXCAVATIONS

**Delete Section J106.1 and replace with the following section:**

**J106.1 Maximum slope.** The slope of cut surfaces shall be no steeper than is safe for the intended use, and shall be no steeper than 2 horizontal to 1 vertical (50 percent) unless the soil study or hydro-geologic conditions dictate steeper slopes. Slope stabilization shall be as required by the soil study or slope stabilization study.

**J106.1.1 Low-Maintenance Areas.** Vegetated areas that are not maintained with machines shall have a maximum slope of 2 horizontal to 1 vertical (50 percent).

**J106.1.2 Maintained Areas.** Vegetated areas that are maintained with machines shall have a maximum slope of 3 horizontal to 1 vertical (33 percent).

**Exceptions:**

1. A cut surface may be at a slope of 1.5 horizontal to 1 vertical (67 percent) provided that all the following are met:

   It is not intended to support structures or surcharges.
   It is adequately protected against erosion.
   It is no more than 8 feet (2438 mm) in height.
   It is approved by the building official.

2. A cut surface in bedrock shall be permitted to be at a slope of 1 horizontal to 1 vertical (100 percent).

## SECTION J107
## FILL

**Delete Section J107.4 and replace with the following section:**

**J107.4 Fill material.** Fill material shall not include organic, frozen or other deleterious materials. No rock or similar irreducible material greater than 4 inches (100 mm) in any dimension shall be included in fills. Refer to project specifications for engineered fill requirements. Where conflicts occur between this section and project specifications, the project specifications shall govern.

**Delete Section J107.6 and replace with the following section:**

**J107.6 Maximum slope.** The slope of fill surfaces shall be no steeper than is safe for the intended use, and shall be no steeper than 2 horizontal to 1 vertical (50 percent) unless the soil study or hydro-geologic conditions dictate flatter slopes. Slope stabilization shall be as required by the soil study or slope stabilization study.

**J107.6.1 Low-Maintenance Areas.** Vegetated areas that are not maintained with machines shall have a maximum slope of 2 horizontal to 1 vertical (50 percent).

**J107.6.2 Maintained Areas.** Vegetated areas that are maintained with machines shall have a maximum slope of 3 horizontal to 1 vertical (33 percent).

SECTION J110
**EROSION CONTROL**

**Add the following section:**

**J110.3 Requirements.** Design of a site sediment and erosion control plan shall conform to the best management practices in Chapter 3 of the EPA's Stormwater Management for Construction Activities, EPA Document No. EPA 832-R-92-005, or local sediment and erosion control standards, whichever is more stringent.

**END OF APPENDIX IBC-J**

# APPENDIX N
# SECURITY DETAILS FOR BUILDING CONSTRUCTION

## SECTION N101
## GENERAL

**Add the following Section:**

**A101.1 Scope.** The provisions of this appendix shall apply to the construction of building physical security walls and penetrations for U.S. Diplomatic Mission compounds.

**A101.2 Referenced Security Details.** The provisions of the *Physical Security Detail Handbook – Details for Buildings, January 2012* are hereby adopted and shall apply to the design, installation, alteration, repair and replacement of building physical security systems, including equipment, assemblies, other protective features and other physical security related systems.

**END OF APPENDIX IBC-N**

# Physical Security Detail Handbook

# Details for Buildings

# January 2012

***United States Department of State***
***Bureau of Overseas Buildings Operations***

***Compiled by: James Geraghty OBO/CFSM/SM/SCD/SEB***

**Unclassified**

# Physical Security Detail Handbook 2012
# Details for Buildings
# Table of Contents

**Certified Assemblies – 5 Minute**


| | |
|---|---|
| GPK-05N-DOS-01(c) | Plywood/metal mesh/steel C-studs/gypsum board wall. |
| GPK-05N-DOS-02(c) | Steel plate/wood boards or plywood/steel C-studs wall. |
| GPK-05N-DOS-02A(c) | Steel plate/wood boards or plywood/wood studs wall. |
| GPK-05N-DOS-03 | Wood boards or plywood/steel studs/gypsum board wall. |
| GPK-05N-DOS-04 | Wood board/wood studs/gypsum board wall. |
| GPK-05N-DOS-05 | Plywood/wood studs/gypsum board wall. |
| GPK-05N-DOS--06 | 100--mm (4") CMU/plywood (3 layers)/gypsum board wall. |
| GPK-05N-DOS-06A | 100-mm (4") CMU/wood board (3 layers)/gypsum board wall. |
| GPK-05N-DOS-07 | 200-mm (8") CMU/plywood (2 layers)/gypsum board wall. |
| GPS-05N-DOS-01 | Steel upgrade of concrete or reinforced masonry wall. |
| XGW-05N-DOS-01 | Interim 5-min. FE window grille. |
| XPK-05N-DOS-04 | Interim 5-min. FE wall, combination (upgrade). |


**Certified Assemblies -15 Minute**


| | |
|---|---|
| GGL-15N-DOS-02 | 15 Minute FE Grill |
| GPC-15R-DOS-02 | 150mm concrete wall, 20-mm (#6) @ 125mm O.C. |
| GPC-15R-DOS-03 | 250-mm (10”) reinforced concrete wall, 12mm (#4) rebar 300-mm (12”) o.c. each way, each face, rebar grids aligned. |
| GPK--15A-DOS-01 | Masonry wall with 6-mm (1/4") steel each side. Armor-piercing resistant. GPK-15R-DOS-01 - Steel upgrade of reinforced concrete or solid masonry wall. |
| GPK-15R-DOS-02 | Steel upgrade of solid masonry wall. |
| GPK-15R-DOS-03 | Steel upgrade of hollow masonry wall. |
| GPK-15R-DOS-04 | Two sided upgrade to hollow masonry wall. |
| GPS-15N-DOS-02 | Steel plate & steel studs wall, provides 15-minute FE protection. |
| GPS-15R-DOS-01 | Dual steel plate and tube wall. |
| GPS-15R-DOS-02 | Alternate dual steel plate wall. |
| GPS-15R-DOS-02A | Modified GPS-15R-DOS-02. |

# Physical Security Detail Handbook 2012
# Details for Buildings
# Table of Contents


| | |
|---|---|
| **XGW-15N-DOS-01** | **Interim 15-min. FE window grille.** |
| **XGX-15N-DOS-01** | **Interim 15-min. FE grille, (special above-ceiling duct penetration).** |

**<u>Certified Assemblies – 60 Minute</u>**

| | |
|---|---|
| **GPC-60A-DOS-01** | **300-mm (12") thick concrete wall (with 12-mm (#4) @ 300-mm (12") o.c. EW-EF (rebar grids staggered front and back). Armor-piercing resistant.** |
| **GPC-60A-DOS-02** | **300-mm (12") thick concrete wall (with 12-mm (#4) @ 300-mm (12") o.c. EW-EF (rebar grids aligned). Armor-piercing resistant.** |
| **GPC-60R-DOS-02** | **250-mm (10”()) reinforced concrete wall, 12-mm (#4) rebar 300mm (12”) o.c. each way, each face, rebar grids staggered.** |
| **GPK-60A-DOS-01** | **150--mm (6”) reinforced concrete with 6mm (1/4”) steel backing. Armor-piercing resistant.** |
| **GPK-60R-DOS-01** | **200-mm (8") concrete wall, 20-mm (#6) rebar 125-mm (5") o.c. each way.** |
| **GPS-60R-DOS-01** | **Dual steel plate wall.** |
| **GPS-60R-DOS-02** | **Dual steel plate wall. Seismic variation of GPS-15R-DOS-01.** |
| **GPS-60R-DOS-03** | **Dual steel plate wall, meets seismic requirements. Also used to provide 15-minute FE/BR protection.** |
| **GPS-60R-DOS-04** | **Modified GPS-60R-DOS-01** |
| **GPS-60R-DOS-04A** | **Modified GPS-60R-DOS-04** |
| **GPS-60R-DOS-05** | **60 Minute Dual Plate Steel Wall** |

**<u>Penetration Details</u>**

| | |
|---|---|
| **PP-00-01** | **Grouted Pipe Penetration** |
| **DP-00-01** | **CAA Tamperproof Penetration (WWF)** |
| **DP-00-02** | **CAA Tamperproof Penetration (WWF)** |
| **DP-00-03** | **CAA Tamperproof Penetration (Mesh)** |
| **DP-23-01** | **Duct Penetration Thru Hardline Wall** |
| **DP-23-02** | **Duct Penetration Thru Steel Hardline Wall** |
| **DP-23-03** | **Duct Penetration** |

# Physical Security Detail Handbook 2012
# Details for Buildings
# Table of Contents


| | |
|---|---|
| **PP-23-01** | **Fingerprint Station Penetration** |
| **PP-23-02** | **Typical Pipe Penetration** |
| **PP-23-03** | **Typical Pipe Penetration – Seismic** |
| **PP-23-04** | **Typical Pipe Penetration – With Insulation** |
| **PP-23-05** | **Cable Tray Penetration** |
| **PP-23-06** | **Typical Pipe Penetration – Hose Bibb** |
| **PP-23-07** | **Typical Pipe Penetration –Ganged Pipes** |
| **PP-33-01** | **Typical Pipe Penetration – Typical Drain** |
| **PP-33-02** | **Typical Pipe Penetration** |
| **PP-33-03** | **Typical Conduit Penetration – In Wall** |
| **PP-33-04** | **Typical Pipe Penetration – Vertical** |
| **PP-33-05** | **Typical Pipe Penetration – Vertical Alternate** |
| **PP-33-06** | **Typical Pipe Penetration – Gooseneck** |
| **PP-33-07** | **Generator Exhaust Detail** |
| **PP-33-08** | **Exhaust Pipe Penetration Detail** |

**Certified Wall Assemblies**

| | |
|---|---|
| **BPK-LIM-DOS-01** | **Limited Protection Barrier** |
| **SS-11-01** | **Special Suite Requirements** |
| **Secure Room** | **Secure Room Wall Detail** |


**END OF PHYSICAL SECURITY HANDBOOK TABLE OF CONTENTS**

# Certified Assemblies

## 5-Minute FE

Unclassified

# Certified Assemblies – 5 Minute

**GPK-05N-DOS-01(c) - Plywood/metal mesh/steel C-studs/gypsum board wall.**

**GPK-05N-DOS-02(c) - Steel plate/wood boards or plywood/steel C-studs wall.**

**GPK-05N-DOS-02A(c) - Steel plate/wood boards or plywood/wood studs wall.**

**GPK-05N-DOS-03 - Wood boards or plywood/steel studs/gypsum board wall.**

**GPK-05N-DOS-04 - Wood board/wood studs/gypsum board wall.**

**GPK-05N-DOS-05 - Plywood/wood studs/gypsum board wall.**

**GPK-05N-DOS-06 - 100-mm (4") CMU/plywood (3 layers)/gypsum board wall.**

# Certified Assemblies – 5 Minute

**GPK-05N-DOS-06A - 100-mm (4") CMU/wood board (3 layers)/gypsum board wall.**

**GPK-05N-DOS-07 - 200-mm (8") CMU/plywood (2 layers)/gypsum board wall.**

**GPS-05N-DOS-01 - Steel upgrade of concrete or reinforced masonry wall.**

**XGW-05N-DOS-01 - Interim 5-min. FE window grille.**

**XPK-05N-DOS-04 - Interim 5-min. FE wall, combination (upgrade).**

MATERIAL NOTES:

1. STRUCTURAL GRADE PLYWOOD: CLASS – ABX E=10MPa (1500 PSI), Fb=8273 kPa (1200 PSI), Fv=965 kPa (140 PSI)
2. ANCHORAGE SHOWN IS FOR CONCRETE ONLY. FOR OTHER SUBSTRATES, REFER TO OBO/PE/DS/SEB FOR GUIDANCE
3. ALL NUMBERS AND DIMENSIONS ARE IN MILLIMETERS UNLESS NOTED OTHERWISE
4. ARCHITECTURAL FINISH TO BE SPECIFIED BY A/E OR OTHERS

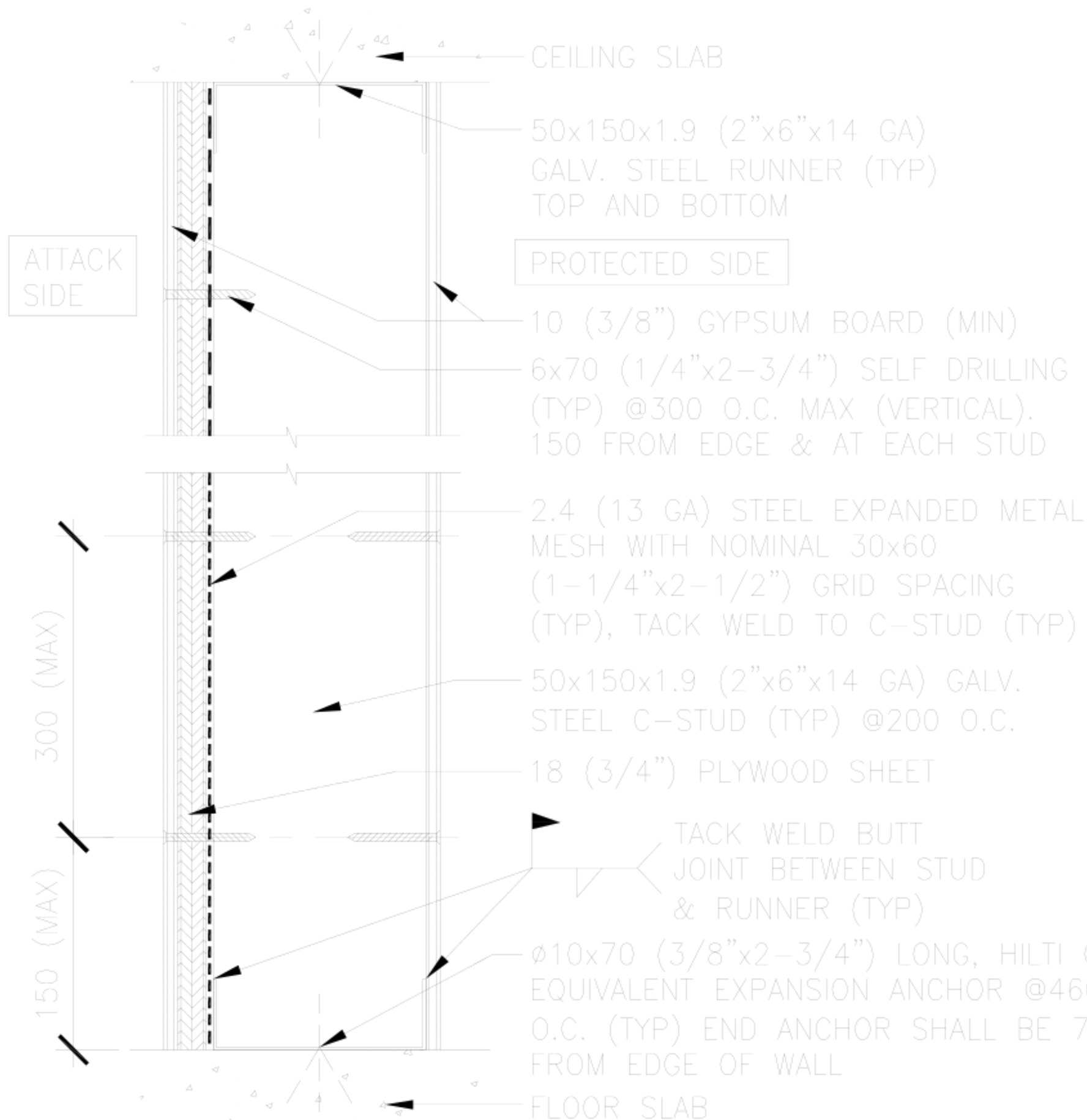


1 SECTION – 5 MINUTE FE HARDLINE WALL

SCALE: 1:5 NOTE: THIS WALL DESIGN IS USED WHERE 5-MINUTE FE PROTECTION IS REQUIRED

WARNING:
This document is the property of the U.S. Government. Further reproduction and/or distribution is prohibited without the express written permission of: Overseas Buildings Operations, U.S. Department of State, Washington, DC, 20522-0620. Information on this document is not to be altered except with the written approval of the individual whose seal appears hereon.

U.S. Department of State
Office of Overseas Buildings Operations

5 MINUTE FE WALL-PLYWD/METAL METAL MESH/STL C-STUD/GWB
GPK-05N-DOS-01(c)

OBO/SEB Security Details

| | |
|---|---|
| DWG.TITLE: GPK-05N-DOS-01c.dwg | |
| REV: | DATE: |
| REV: | DATE: |
| SCALE: 1:5 | SHEET: 1 OF 1 |
| DRAWN BY: | |
| DATE: January 2009 | UNCLASSIFIED |

MATERIAL NOTES:

1. STEEL PLATE: ASTM A36 OR EQUIVALENT, Fy=250 MPa
2. WOOD BOARDS: DOUGLAS FIR SELECT STRUCTURAL OR EQUIVALENT, E=12.6 MPa, Fb=12400 kPA, Fv=650 KpA (MIN)
3. ANCHORAGE SHOWN IS FOR CONCRETE ONLY. FOR OTHER SUBSTRATES, REFER TO OBO/PE/DS/SEB FOR GUIDANCE
4. STRUCTURAL GRADE 18mm THICK PLYWOOD: ABX, E=10 MPa (1500 PSI), Fb=8273 kPA (1200 PSI), Fv=965 kPa (140 PSI) WITH 6mm x 70mm SELF DRILLING SCREWS (TYP) AT 300mm O.C. (MAX) ON VERTICAL, 150mm FROM EDGE & AT EACH STUD, IS AN ALLOWABLE SUBSTITUTION FOR THE BOARDS
5. ARCHITECTURAL FINISH TO BE SPECIFIED BY A/E OR OTHERS
6. ALL NUMBERS AND DIMENSIONS ARE IN MILLIMETERS UNLESS NOTED OTHERWISE

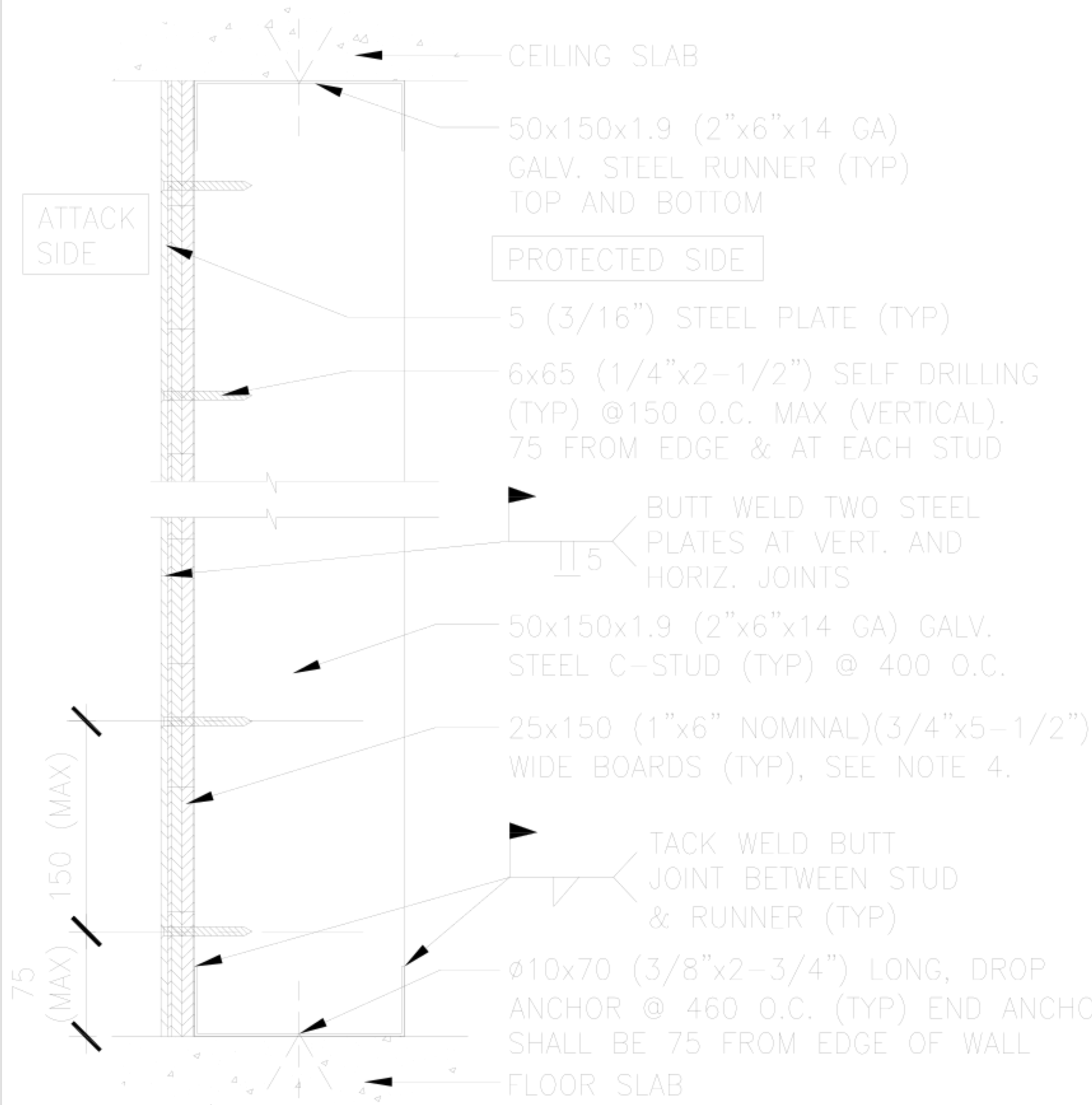


1 SECTION – 5 MINUTE FE HARDLINE WALL

SCALE: 1:5 NOTE: THIS WALL DESIGN IS USED WHERE 5-MINUTE FE PROTECTION IS REQUIRED

WARNING:
This document is the property of the U.S. Government. Further reproduction and/or distribution is prohibited without the express written permission of: Overseas Buildings Operations, U.S. Department of State, Washington, DC, 20522-0620. Information on this document is not to be altered except with the written approval of the individual whose seal appears hereon.

U.S. Department of State
Office of Overseas Buildings Operations

5 MINUTE FE WALL – STL PLATE WD BDS OR PLYWD/STL C-STUDS GPK-05N-DOS-02(c)

OBO/SEB Security Details

| | |
|---|---|
| DWG.TITLE: GPK-05N-DOS-02c.dwg | |
| REV: | DATE: |
| REV: | DATE: |
| SCALE: 1:5 | SHEET: 1 OF 1 |
| DRAWN BY: | |
| DATE: January 2009 | UNCLASSIFIED |

MATERIAL NOTES:

1. STEEL PLATE: ASTM A36 OR EQUIVALENT, Fy=250 MPa
2. WOOD BOARDS STUDS & RUNNERS: DOUGLAS FIR SELECT STRUCTURAL OR EQUIVALENT, E=12.6 MPa (1830 PSI), Fb=12400 kPa (1800 PSI), Fv=650 kPa (94 PSI)
3. ANCHORAGE SHOWN IS FOR CONCRETE ONLY. FOR OTHER SUBSTRATES, REFER TO OBO/PE/DS/SEB FOR GUIDANCE
4. STUDS SHALL NOT SPLICED
5. STRUCTURAL GRADE 18mm THICK PLYWOOD: CLASS – ABX, E=10 MPa (1500 PSI), Fb=8273 kPa (1200 PSI), Fv= 965 kPa (140 PSI) WITH 6mm x 70mm SELF DRILLING SCREWS (TYP) AT 300mm O.C. (MAX) ON VERTICAL, 150mm FROM EDGE & AT EACH STUD, IS AN ALLOWABLE SUBSTITUTION FOR THE BOARDS
6. ARCHITECTURAL FINISH TO BE SPECIFIED BY A/E OR OTHERS
7. ALL DIMENSIONS ARE IN MILLIMETERS

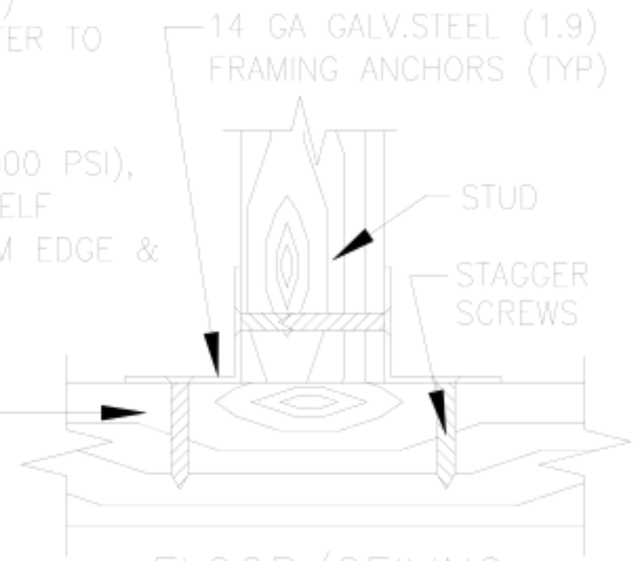


FLOOR/CEILING STUD TO RUNNER DETAIL

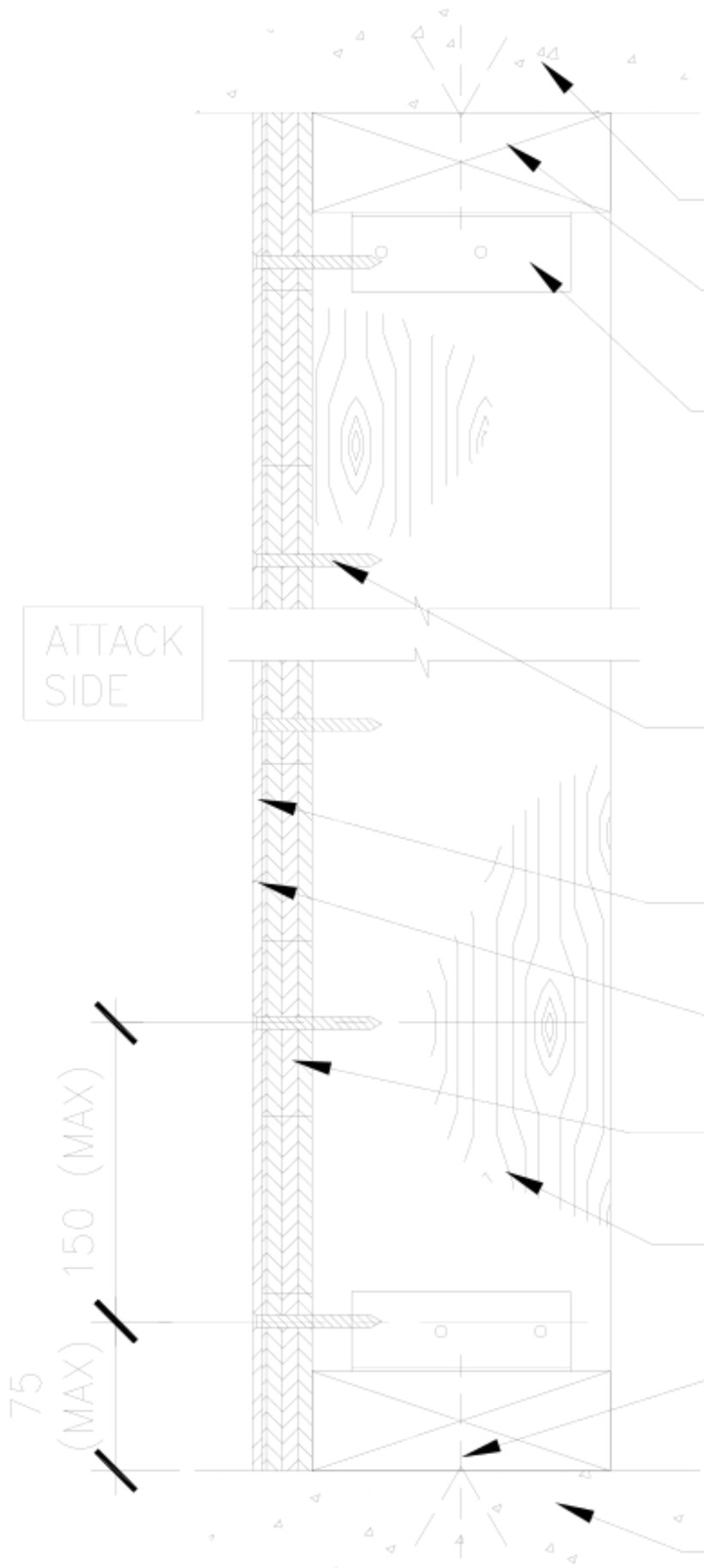


CEILING SLAB

50x150 (2"x6"NOMINAL)(1-1/2"x5-1/2") WIDE WOOD RUNNER (TYP) TOP & BOTTOM

110x40x40 (4-1/2"x1-1/2"x1-1/2") 14 GA GALV. STEEL (1.9) FRAMING ANCHORS (TYP) (4) PER STUD (TOP & BOTTOM). INSTALL PER MANUFACTURER'S INSTRUCTIONS

PROTECTED SIDE

M6.3x65 (#14x2.5") SELF DRILLING SCREW (TYP) @150 O.C. MAX (VERTICAL), 75 FROM EDGE & AT EACH STUD

5 (3/16") STEEL PLATE (TYP)

5 BUTT WELD TWO STEEL PLATES AT VERT. & HORIZ. JOINTS

25x150 (1x6 NOMINAL)(3/4"x5-1/2") WIDE BOARDS (TYP), (SEE NOTE 5)

50x150 (2"x6" NOMINAL)(1-1/2"x 3-1/2") WIDE WOOD STUD (TYP) @400 O.C. (MAX)

ø10x140 (3/8"x5-1/2") LONG, DROP ANCHOR @460 O.C. (TYP) END ANCHOR SHALL BE 75 FROM EDGE OF WALL

FLOOR SLAB

1 SECTION – 5 MINUTE FE HARDLINE WALL

SCALE: 1:5 NOTE: THIS WALL DESIGN IS USED WHERE 5-MINUTE FE PROTECTION IS REQUIRED

WARNING:
This document is the property of the U.S. Government. Further reproduction and/or distribution is prohibited without the express written permission of: Overseas Buildings Operations, U.S. Department of State, Washington, DC, 20522-0620. Information on this document is not to be altered except with the written approval of the individual whose seal appears hereon.

U.S. Department of State

Office of Overseas Buildings Operations

5 MINUTE FE WALL – STL PLATE WD BOARDS OR PLYWD/WD STUDS GPK-05N-DOS-02A(c)

OBO/SEB Security Details

| | |
|---|---|
| DWG.TITLE: GPK-05N-DOS-02Ac.dwg | |
| REV: | DATE: |
| REV: | DATE: |
| SCALE: 1:5 | SHEET: 1 OF 1 |
| DRAWN BY: | |
| DATE: January 2009 | UNCLASSIFIED |

MATERIAL NOTES:

1. WOOD BOARDS STUDS & RUNNERS: DOUGLAS FIR SELECT STRUCTURAL OR EQUIVALENT, E=12.6 MPa (1830 PSI), Fb=12400 kPa (1800 PSI), Fv=650 kPa (94 PSI)
2. ANCHORAGE SHOWN IS FOR CONCRETE ONLY. FOR OTHER SUBSTRATES, REFER TO OBO/PE/DS/SEB FOR GUIDANCE
3. STUDS SHALL NOT BE SPLICED
4. STRUCTURAL GRADE 18mm THICK PLYWOOD: CLASS – ABX, E=10 MPa (1500 PSI), Fb=8273 kPa (1200 PSI), Fv= 965 kPa (140 PSI) WITH 6mm x 70mm SELF DRILLING SCREWS (TYP) AT 300mm O.C. (MAX) ON VERTICAL, 150mm FROM EDGE & AT EACH STUD, IS AN ALLOWABLE SUBSTITUTION FOR THE BOARDS
5. ARCHITECTURAL FINISH TO BE SPECIFIED BY A/E OR OTHERS
6. ALL DIMENSIONS ARE IN MILLIMETERS UNLESS OTHERWISE NOTED

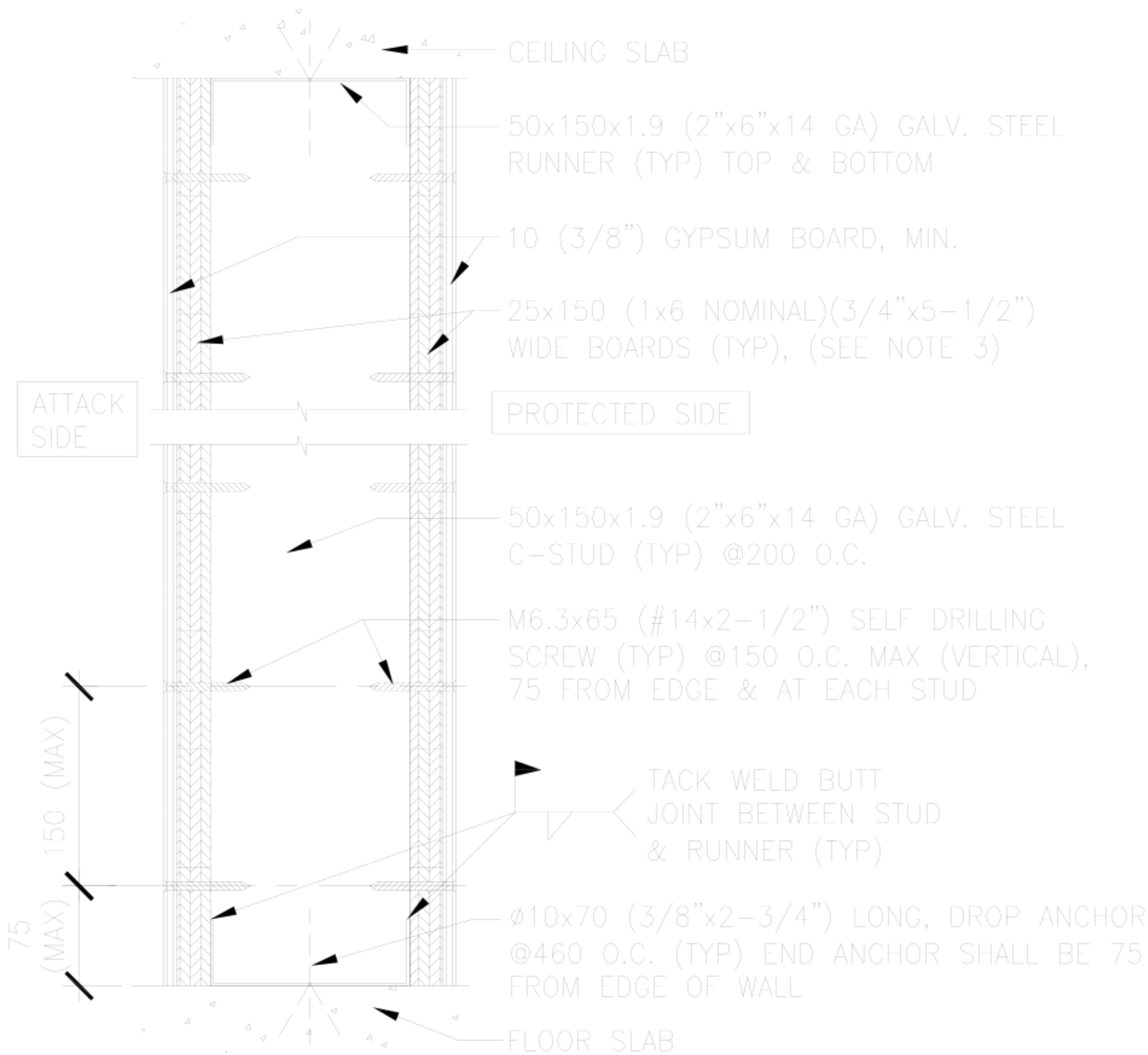


1 SECTION – 5 MINUTE FE WALL

SCALE: 1:5 NOTE: THIS WALL DESIGN IS USED WHERE 5-MINUTE FE PROTECTION IS REQUIRED

WARNING:
This document is the property of the U.S. Government. Further reproduction and/or distribution is prohibited without the express written permission of: Overseas Buildings Operations, U.S. Department of State, Washington, DC, 20522-0620. Information on this document is not to be altered except with the written approval of the individual whose seal appears hereon.

U.S. Department of State

Office of Overseas Buildings Operations

5 MINUTE FE WALL–WOOD BOARDS OR PLYWOOD/STEEL STUDS/GWB
GPK-05N-DOS-03

OBO/SEB Security Details

| | |
|---|---|
| DWG.TITLE: GPK-05N-DOS-03.dwg | |
| REV: | DATE: |
| REV: | DATE: |
| SCALE: 1:5 | SHEET: 1 OF 1 |
| DRAWN BY: | |
| DATE: January 2009 | UNCLASSIFIED |

MATERIAL NOTES:

1. WOOD BOARDS STUDS & RUNNERS: DOUGLAS FIR SELECT STRUCTURAL OR EQUIVALENT, E=12.6 MPa (1830 PSI), Fb=12400 kPa (1800 PSI), Fv=650 kPa (94 PSI)
2. ANCHORAGE SHOWN IS FOR CONCRETE ONLY. FOR OTHER SUBSTRATES, REFER TO OBO/PE/DS/SEB FOR GUIDANCE
3. STUDS SHALL NOT BE SPLICED
4. ALL NUMBERS AND DIMENSIONS ARE IN MILLIMETERS UNLESS NOTED OTHERWISE

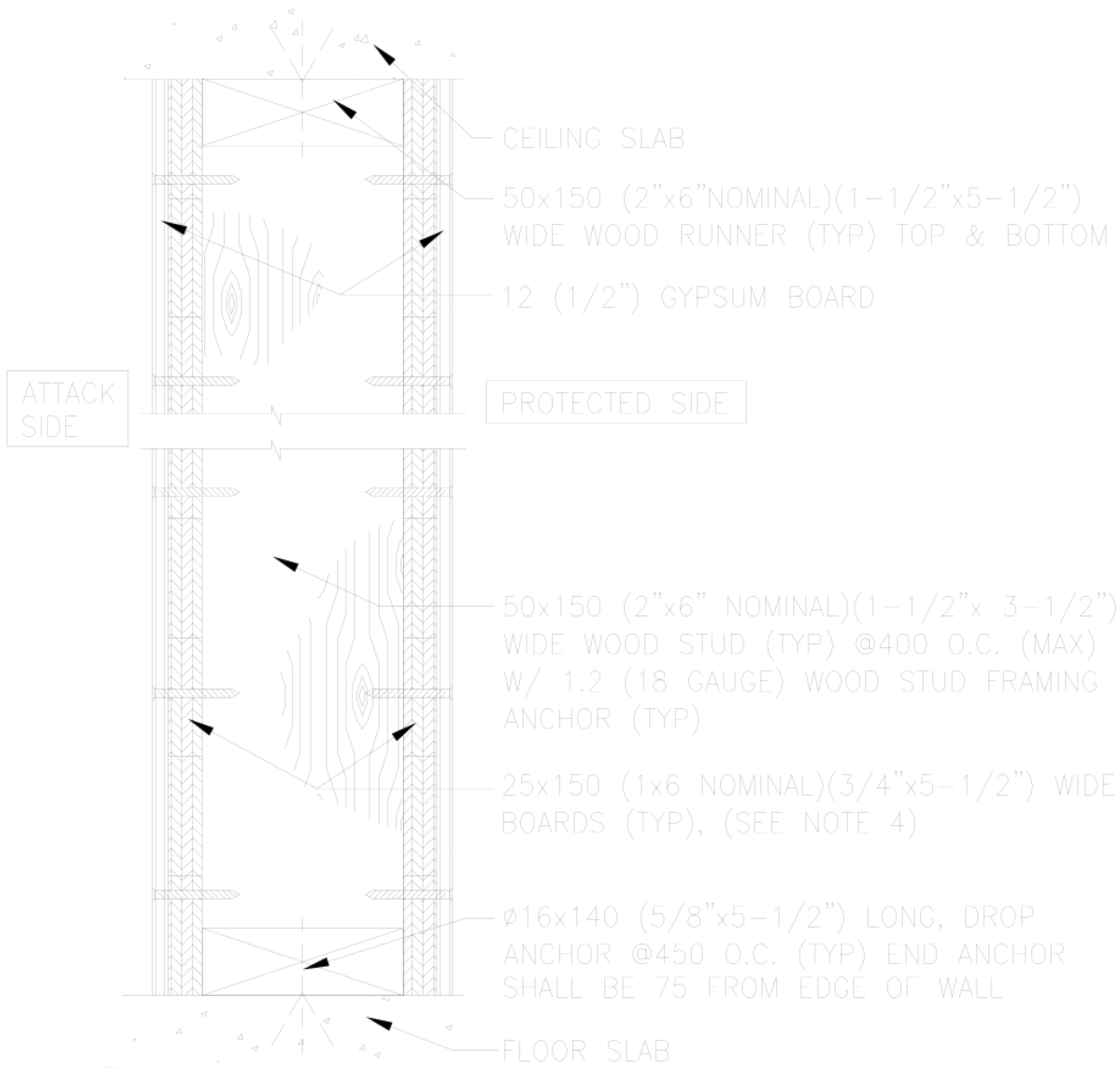


1 SECTION – 5 MINUTE FE WALL

SCALE: 1:5 NOTE: THIS WALL DESIGN IS USED WHERE 5-MINUTE FE PROTECTION IS REQUIRED

WARNING:
This document is the property of the U.S. Government. Further reproduction and/or distribution is prohibited without the express written permission of: Overseas Buildings Operations, U.S. Department of State, Washington, DC, 20522-0620. Information on this document is not to be altered except with the written approval of the individual whose seal appears hereon.

U.S. Department of State

Office of Overseas Buildings Operations

5 MINUTE FE WALL – WOOD BOARDS
WOOD STUDS / GWB
GPK-05N-DOS-04

OBO/SEB Security Details

| | |
|---|---|
| DWG.TITLE: GPK-05N-DOS-04.dwg | |
| REV: | DATE: |
| REV: | DATE: |
| SCALE: 1:5 | SHEET: 1 OF 1 |
| DRAWN BY: | |
| DATE: January 2009 | UNCLASSIFIED |

MATERIAL NOTES:

1. ANCHORAGE SHOWN IS FOR CONCRETE ONLY. FOR OTHER SUBSTRATES, REFER TO OBO/PE/DS/SEB FOR GUIDANCE
2. STUDS SHALL NOT BE PLICED
3. STRUCTURAL GRADE 20mm THICK PLYWOOD: CLASS – ABX, E=10 MPa (1500 PSI), Fb=8273 kPa (1200 PSI), Fv= 965 kPa (140 PSI) WITH 6mm x 70mm SELF DRILLING SCREWS (TYP) AT 300mm O.C. (MAX) ON VERTICAL, 150mm FROM EDGE & AT EACH STUD, IS AN ALLOWABLE SUBSTITUTION FOR THE BOARDS
4. ALL NUMBERS AND DIMENSIONS ARE IN MILLIMETERS UNLESS NOTED OTHERWISE

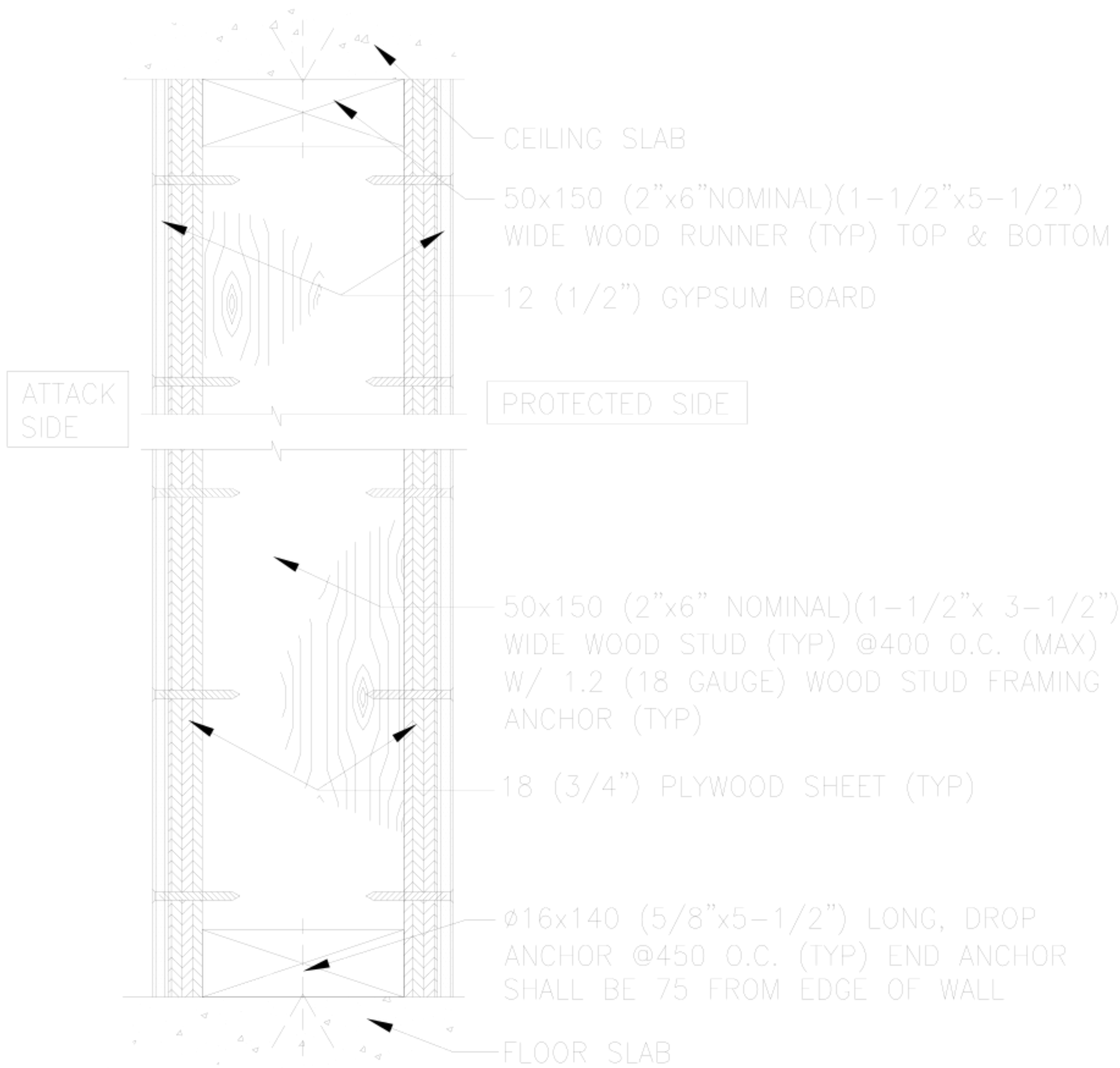


1 SECTION – 5 MINUTE FE WALL

SCALE: 1:5 NOTE: THIS WALL DESIGN IS USED WHERE 5-MINUTE FE PROTECTION IS REQUIRED

WARNING:
This document is the property of the U.S. Government. Further reproduction and/or distribution is prohibited without the express written permission of: Overseas Buildings Operations, U.S. Department of State, Washington, DC, 20522-0620. Information on this document is not to be altered except with the written approval of the individual whose seal appears hereon.

U.S. Department of State

Office of Overseas Buildings Operations

5 MINUTE FE WALL – PLYWOOD / WOOD STUDS / GWB
GPK-05N-DOS-05

OBO/SEB Security Details

| | |
|---|---|
| DWG.TITLE: GPK-05N-DOS-05.dwg | |
| REV: | DATE: |
| REV: | DATE: |
| SCALE: 1:5 | SHEET: 1 OF 1 |
| DRAWN BY: | |
| DATE: January 2009 | UNCLASSIFIED |

MATERIAL NOTES:

1. STEEL ANGLES: fy=250 MPa (MIN)(36 KSI)
2. STRUCTURAL GRADE 20mm THICK PLYWOOD: CLASS – ABX, E=10 MPa (1500 PSI), Fb=8273 kPa (1200 PSI), Fv= 965 kPa (140 PSI)
3. CONCRETE MASONRY UNIT: 2000 KG/M$^3$ (125 PCF)
4. ALL NUMBERS AND DIMENSIONS ARE IN MILLIMETERS UNLESS NOTED OTHERWISE

NOTE: SEAMS OF PLYWOOD AND GYPSUM BOARD ARE PERPENDICULAR TO EACH OTHER (TYP)

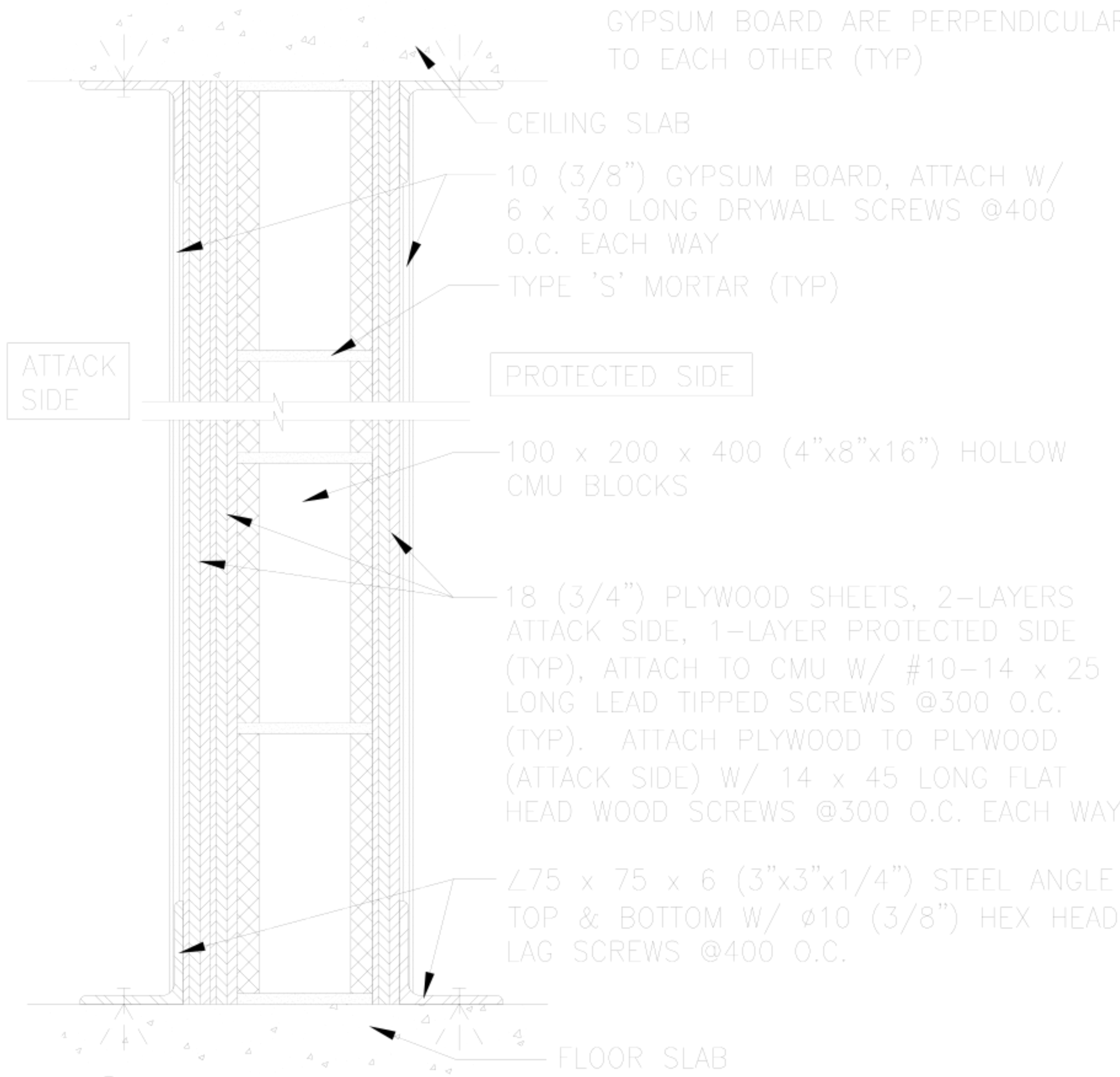


1 SECTION – 5 MINUTE FE WALL

SCALE: 1:5

NOTE: THIS WALL DESIGN IS USED WHERE 5-MINUTE FE PROTECTION IS REQUIRED

WARNING:
This document is the property of the U.S. Government. Further reproduction and/or distribution is prohibited without the express written permission of: Overseas Buildings Operations, U.S. Department of State, Washington, DC, 20522-0620. Information on this document is not to be altered except with the written approval of the individual whose seal appears hereon.

U.S. Department of State

Office of Overseas Buildings Operations

5 MINUTE FE WALL – 100mm CMU PLYWOOD (3 LAYERS) / GWB
GPK-05N-DOS-06

OBO/SEB Security Details

| | |
|---|---|
| DWG.TITLE: GPK-05N-DOS-06.dwg | |
| REV: | DATE: |
| REV: | DATE: |
| SCALE: 1:5 | SHEET: 1 OF 1 |
| DRAWN BY: | |
| DATE: January 2009 | UNCLASSIFIED |

MATERIAL NOTES:

1. STEEL ANGLES: fy=250 MPa (MIN)(36 KSI)
2. WOOD BOARDS: DOUGLAS FIR SELECT STRUCTURAL OR EQUIVALENT, E=12.6 MPa (1830 PSI), Fb=12400 kPa (1800 PSI), Fv= 650 kPa (94 PSI)
3. CONCRETE MASONRY UNIT: 2000 KG/M$^3$ (125 PCF)
4. ALL NUMBERS AND DIMENSIONS ARE IN MILLIMETERS UNLESS NOTED OTHERWISE

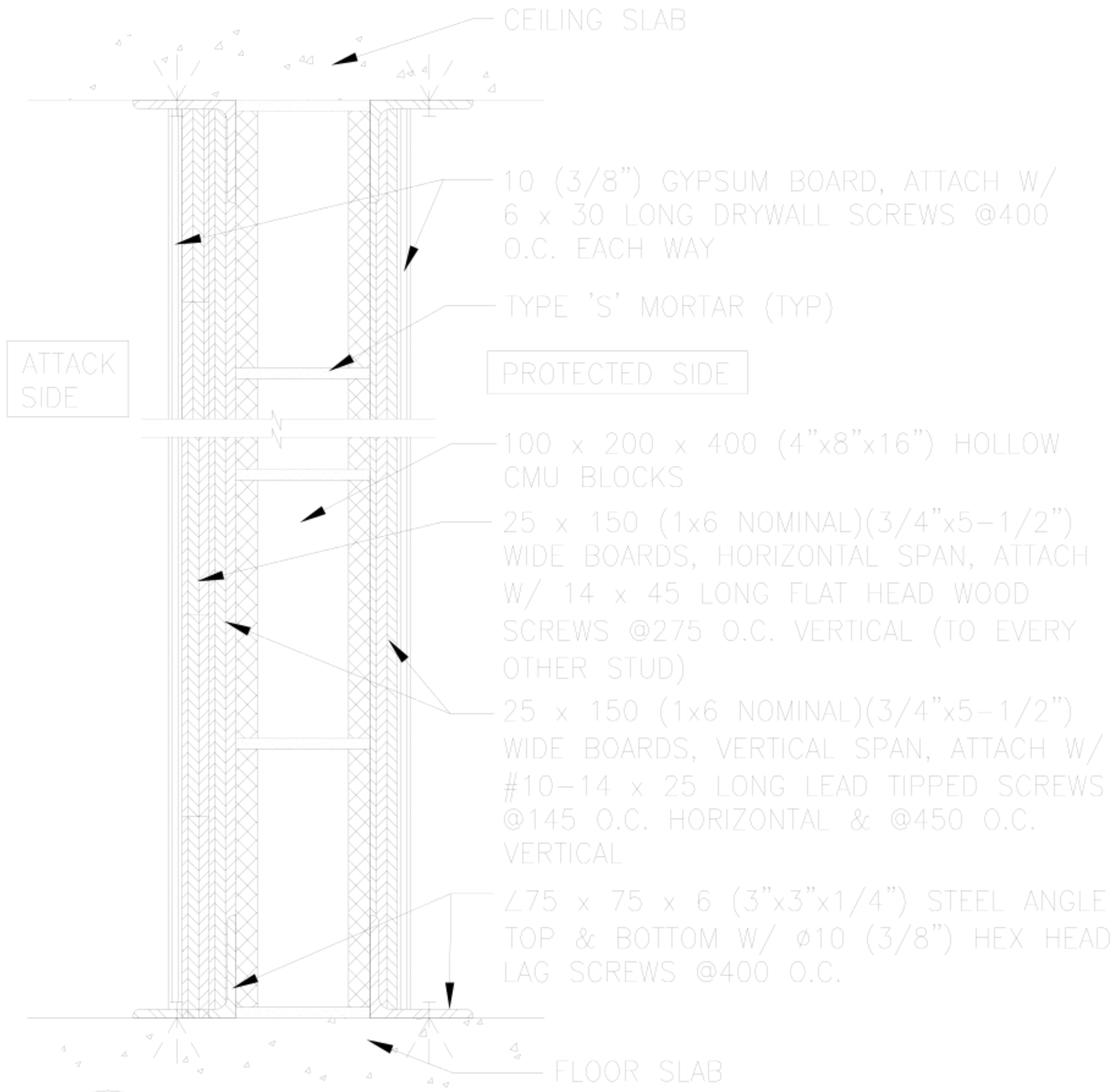


1 SECTION – 5 MINUTE FE WALL

SCALE: 1:5 NOTE: THIS WALL DESIGN IS USED WHERE 5-MINUTE FE PROTECTION IS REQUIRED

WARNING:
This document is the property of the U.S. Government. Further reproduction and/or distribution is prohibited without the express written permission of: Overseas Buildings Operations, U.S. Department of State, Washington, DC, 20522-0620. Information on this document is not to be altered except with the written approval of the individual whose seal appears hereon.

U.S. Department of State
Office of Overseas Buildings Operations

5 MINUTE FE WALL – 100mm CMU WOOD BOARD (3 LAYERS) / GWB GPK-05N-DOS-06A

OBO/SEB Security Details

| | |
|---|---|
| DWG.TITLE: GPK-05N-DOS-06A.dwg | |
| REV: | DATE: |
| REV: | DATE: |
| SCALE: 1:5 | SHEET: 1 OF 1 |
| DRAWN BY: | |
| DATE: January 2009 | UNCLASSIFIED |

MATERIAL NOTES:

1. STRUCTURAL GRADE 20mm THICK PLYWOOD: CLASS – ABX, E=10 MPa (1500 PSI), Fb=8273 kPa (1200 PSI), Fv= 965 kPa (140 PSI)
2. CONCRETE MASONRY UNIT: 2000 KG/M$^3$ (125 PCF)
3. ALL NUMBERS AND DIMENSIONS ARE IN MILLIMETERS UNLESS NOTED OTHERWISE

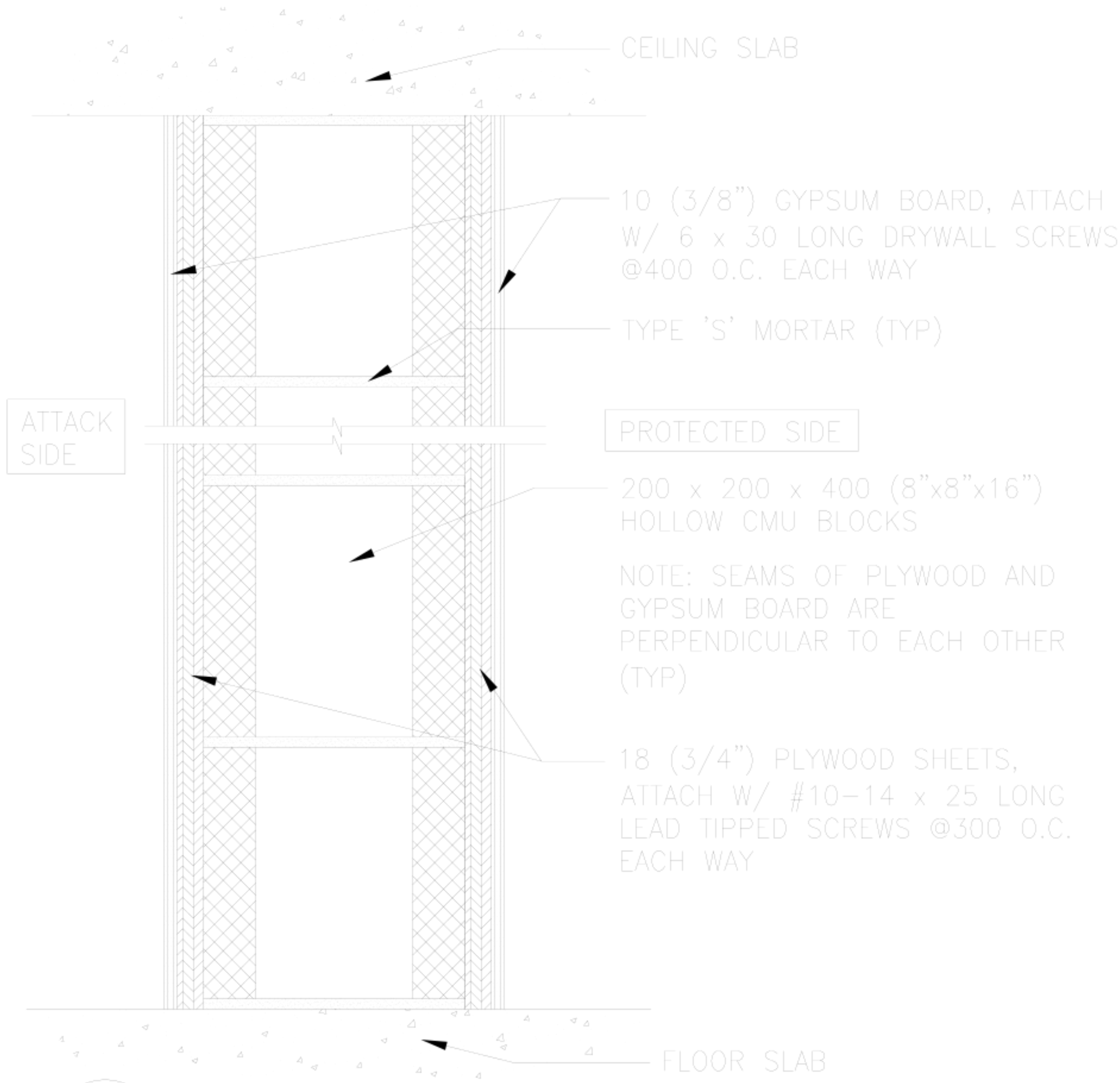


1 SECTION – 5 MINUTE FE WALL

SCALE: 1:5 NOTE: THIS WALL DESIGN IS USED WHERE 5-MINUTE FE PROTECTION IS REQUIRED

WARNING:
This document is the property of the U.S. Government. Further reproduction and/or distribution is prohibited without the express written permission of: Overseas Buildings Operations, U.S. Department of State, Washington, DC, 20522-0620. Information on this document is not to be altered except with the written approval of the individual whose seal appears hereon.

U.S. Department of State

Office of Overseas Buildings Operations

5 MINUTE FE WALL – 200mm CMU PLYWOOD (2 LAYERS) / GWB
GPK-05N-DOS-07

OBO/SEB Security Details

| | |
|---|---|
| DWG.TITLE: GPK-05N-DOS-07.dwg | |
| REV: | DATE: |
| REV: | DATE: |
| SCALE: 1:5 | SHEET: 1 OF 1 |
| DRAWN BY: | |
| DATE: January 2009 | UNCLASSIFIED |

MATERIAL SPECIFICATIONS

STEEL PLATE & ANGLES:
fy=250 MPa (MIN.)(36 KSI)

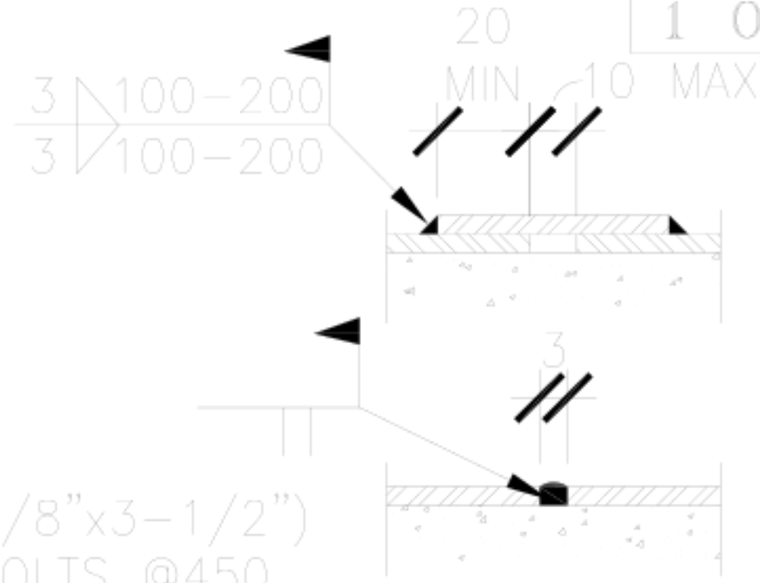


TYPICAL PLATE JOINT DETAILS

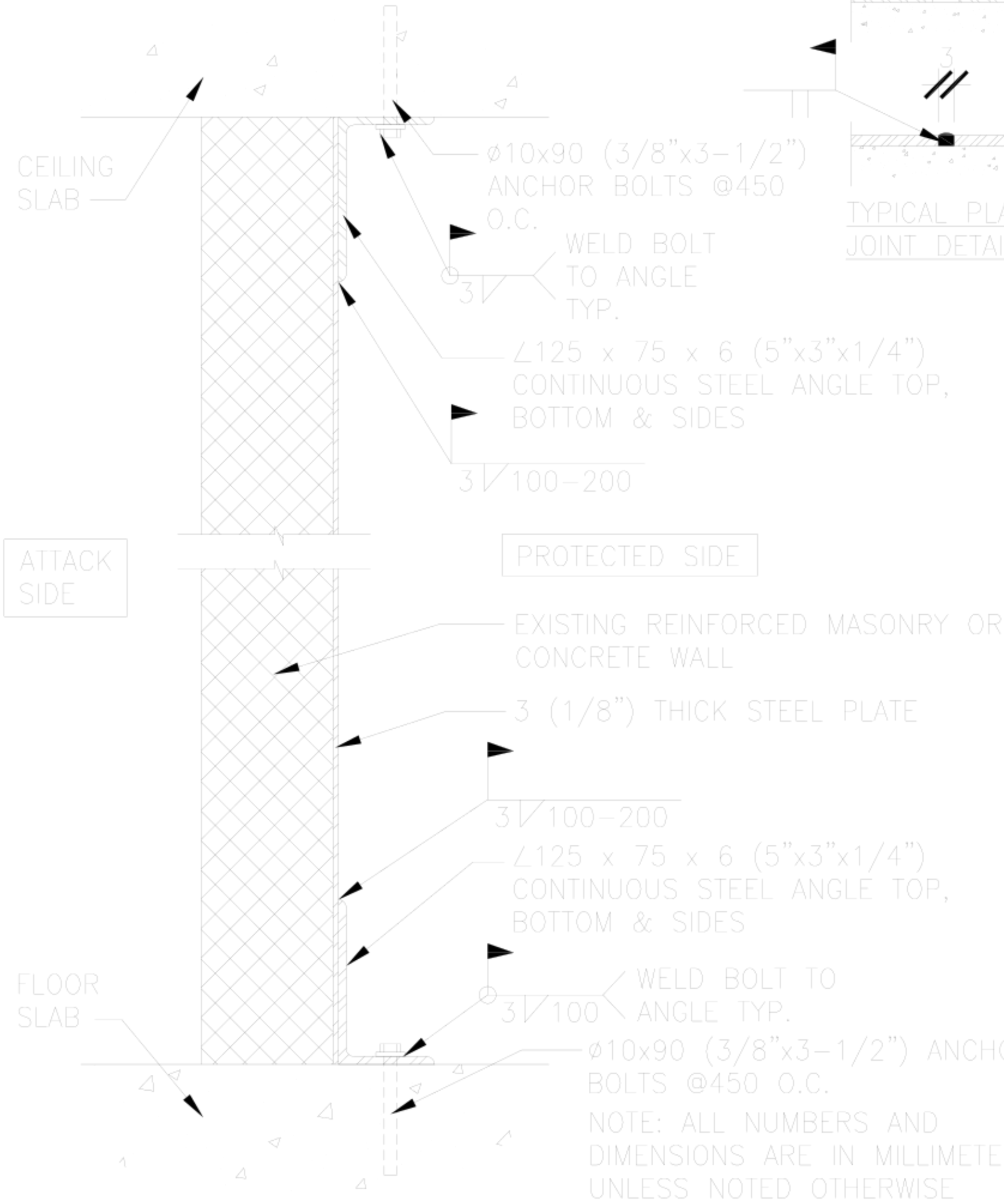


NOTE: ALL NUMBERS AND DIMENSIONS ARE IN MILLIMETERS UNLESS NOTED OTHERWISE

## 1 SECTION – UPGRADE 5 MINUTE WALL

SCALE: 1:5

NOTE: THIS DESIGN IS USED WHERE UPGRADE OF EXISTING MASONRY WALL TO 5 MINUTE FE CRITERIA IS REQUIRED

WARNING:
This document is the property of the U.S. Government. Further reproduction and/or distribution is prohibited without the express written permission of: Overseas Buildings Operations, U.S. Department of State, Washington, DC, 20522-0620. Information on this document is not to be altered except with the written approval of the individual whose seal appears hereon.

U.S. Department of State

Office of Overseas Buildings Operations

# 5 MINUTE FE STEEL UPGRADE OF CONC OR REINF MASONRY WALL GPS-05N-DOS-01

OBO/SEB Security Details

| | |
|---|---|
| DWG.TITLE: GPS-05N-DOS-01.dwg | |
| REV: | DATE: |
| REV: | DATE: |
| SCALE: 1:5 | SHEET: 1 OF 1 |
| DRAWN BY: | |
| DATE: January 2009 | UNCLASSIFIED |

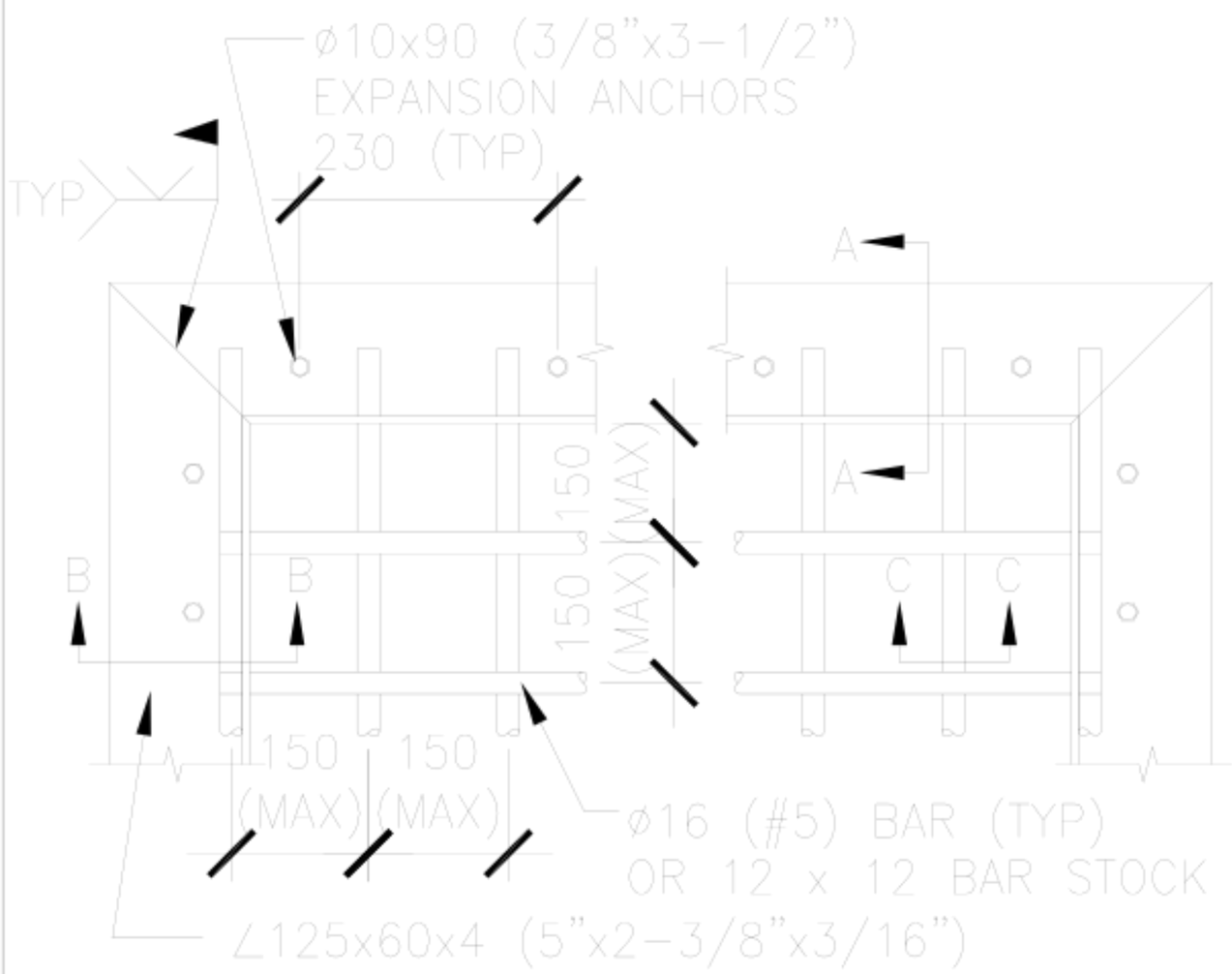


MATERIAL SPECIFICATIONS:
ANGLES:
fy=250 MPa
REINFORCING BARS:
fy=420 MPa MIN.
SQUARE BARS:
fy=250 MPa MIN.

ANCHORING SPECIFICATIONS:
CONCRETE: M10x90 (3/8"x3-1/2")(MIN) DROP-IN EXPANSION ANCHORS @230 O.C. (MAX). ANCHOR/BOLT HEADS SHOULD BE WELDED TO THE FRAME
STEEL: M10x1.5x25 (3/8"-16NC x 1") SOCKET HEAD CAP SCREWS @230 O.C. ANCHOR/BOLT HEADS SHOULD BE WELDED TO THE FRAME
MASONRY: M10x150 (3/8"x6")(MIN) HILTI C-20 OR EQUIVALENT @460 O.C. ANCHOR/BOLT HEADS SHOULD BE WELDED TO THE FRAME

ALL DIMENSIONS ARE IN MM. ACCEPTABLE IP SIZES IN ( ).

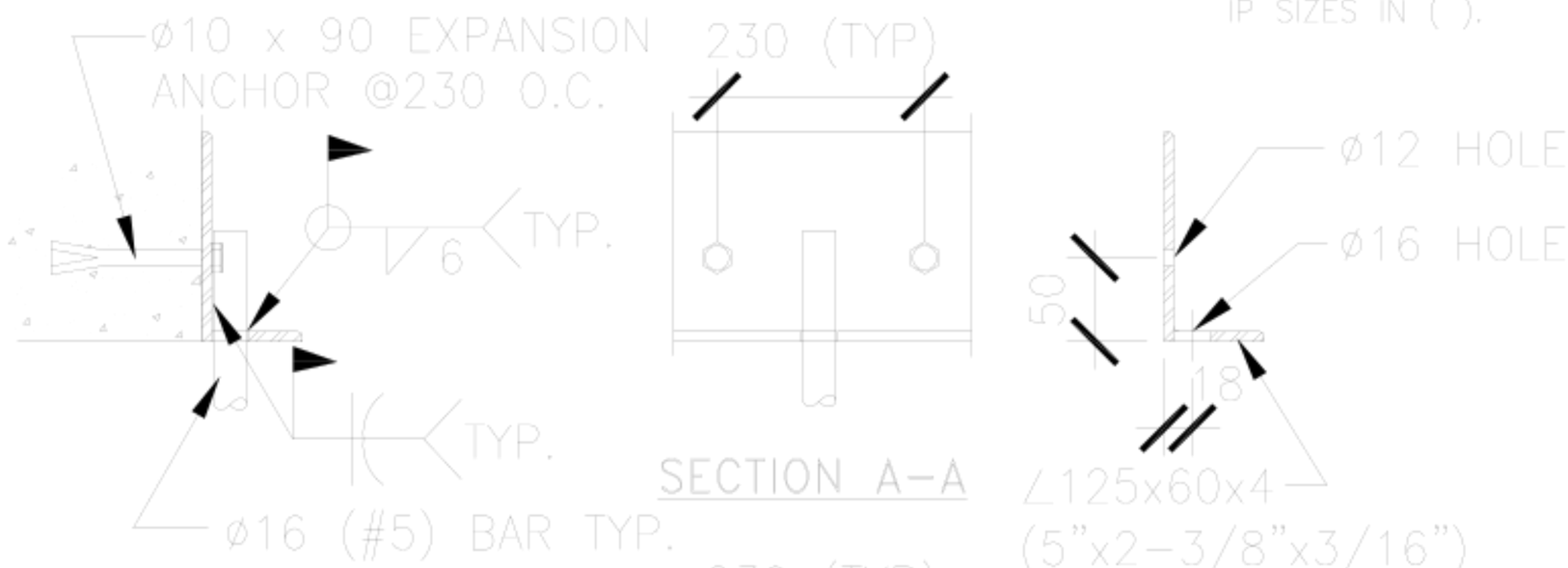


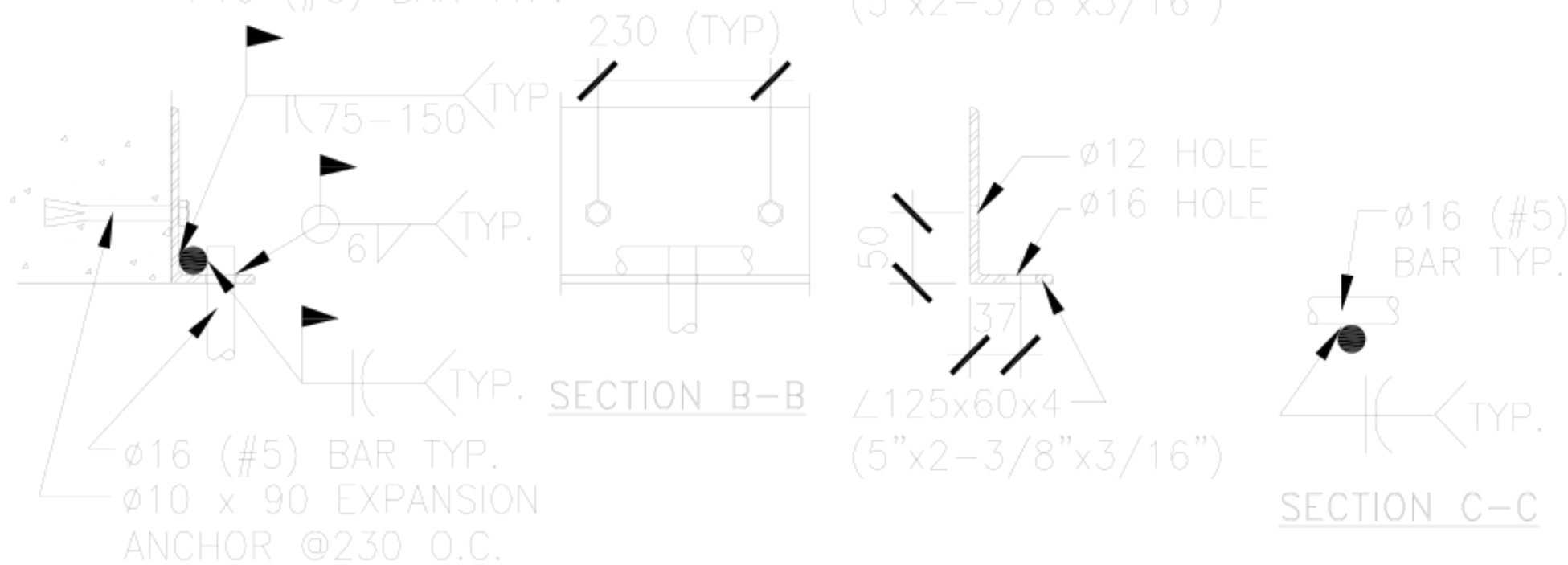


## 1 SURFACE MOUNT-5 MINUTE FE DUCT GRILLE

SCALE: N.T.S.

NOTE: THESE GRILLES ARE USED AT WINDOW OPENINGS, DUCT PENETRATIONS AND OTHER OPENINGS REQUIRING 5 MINUTE FE PROTECTION

WARNING:
This document is the property of the U.S. Government. Further reproduction and/or distribution is prohibited without the express written permission of: Overseas Buildings Operations, U.S. Department of State, Washington, DC, 20522-0620. Information on this document is not to be altered except with the written approval of the individual whose seal appears hereon.

U.S. Department of State
Office of Overseas Buildings Operations

# INTERIM 5 MINUTE FE GRILLE (SURFACE MOUNT) XGW-05N-DOS-01

OBO/SEB Security Details

| | |
|---|---|
| DWG.TITLE: XGW-05N-DOS-01.dwg | |
| REV: | DATE: |
| REV: | DATE: |
| SCALE: 1:5 | SHEET: 1 OF 2 |
| DRAWN BY: | |
| DATE: January 2009 | UNCLASSIFIED |

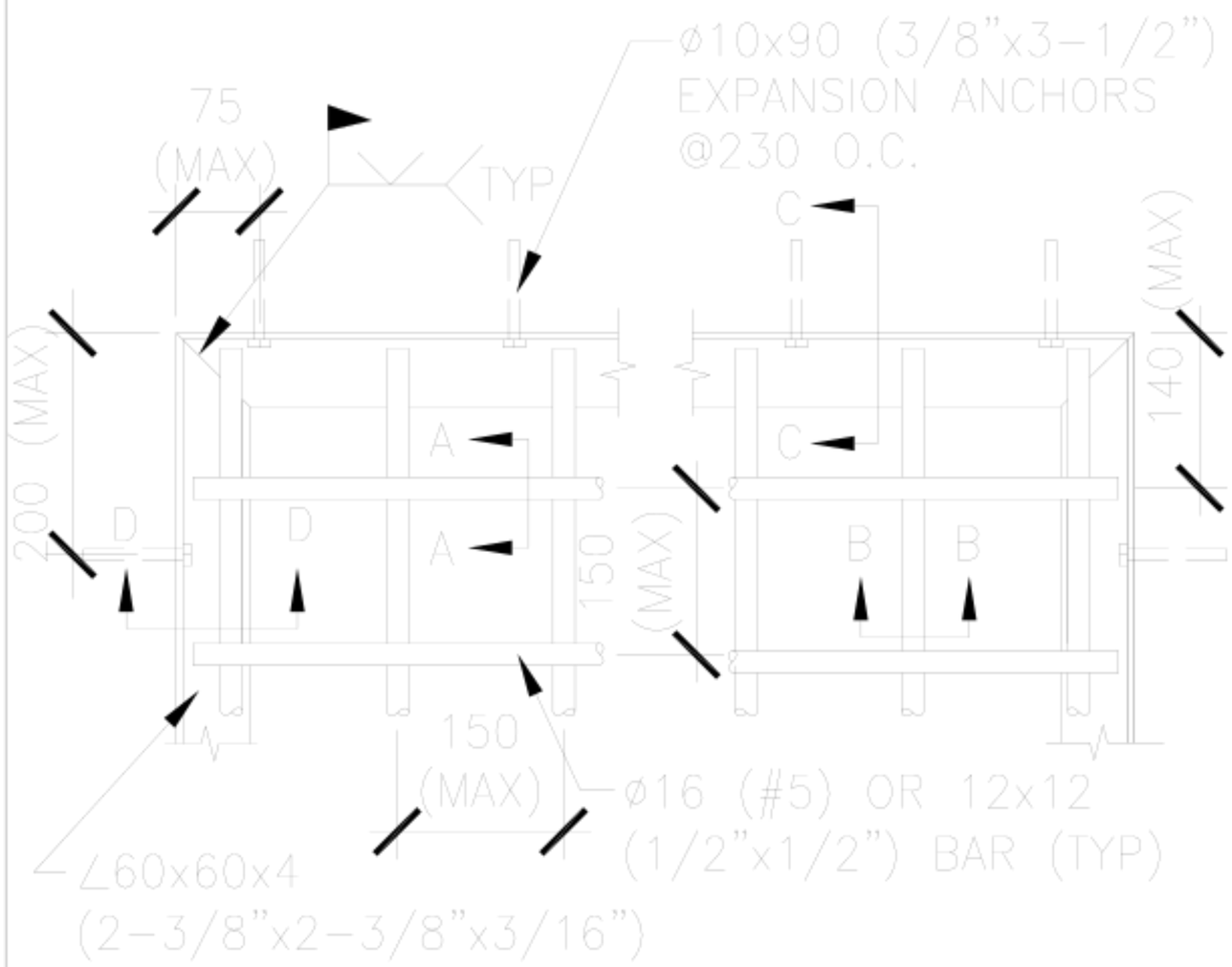


MATERIAL SPECIFICATIONS:
ANGLES:
fy=250 MPa
REINFORCING BARS:
fy=420 MPa MIN.
SQUARE BARS:
fy=250 MPa MIN.

ANCHORING SPECIFICATIONS:
CONCRETE: M10x90 (3/8"x3-1/2")(MIN) DROP-IN EXPANSION ANCHORS @230 O.C. (MAX). ANCHOR/BOLT HEADS SHOULD BE WELDED TO THE FRAME
STEEL: M10x1.5x25 (3/8"-16NC x 1") SOCKET HEAD CAP SCREWS @230 O.C. ANCHOR/BOLT HEADS SHOULD BE WELDED TO THE FRAME
MASONRY: M10x150 (3/8"x6")(MIN) HILTI C-20 OR EQUIVALENT @460 O.C. ANCHOR/BOLT HEADS SHOULD BE WELDED TO THE FRAME

ALL DIMENSIONS ARE IN MM. ACCEPTABLE IP SIZES IN ( ).

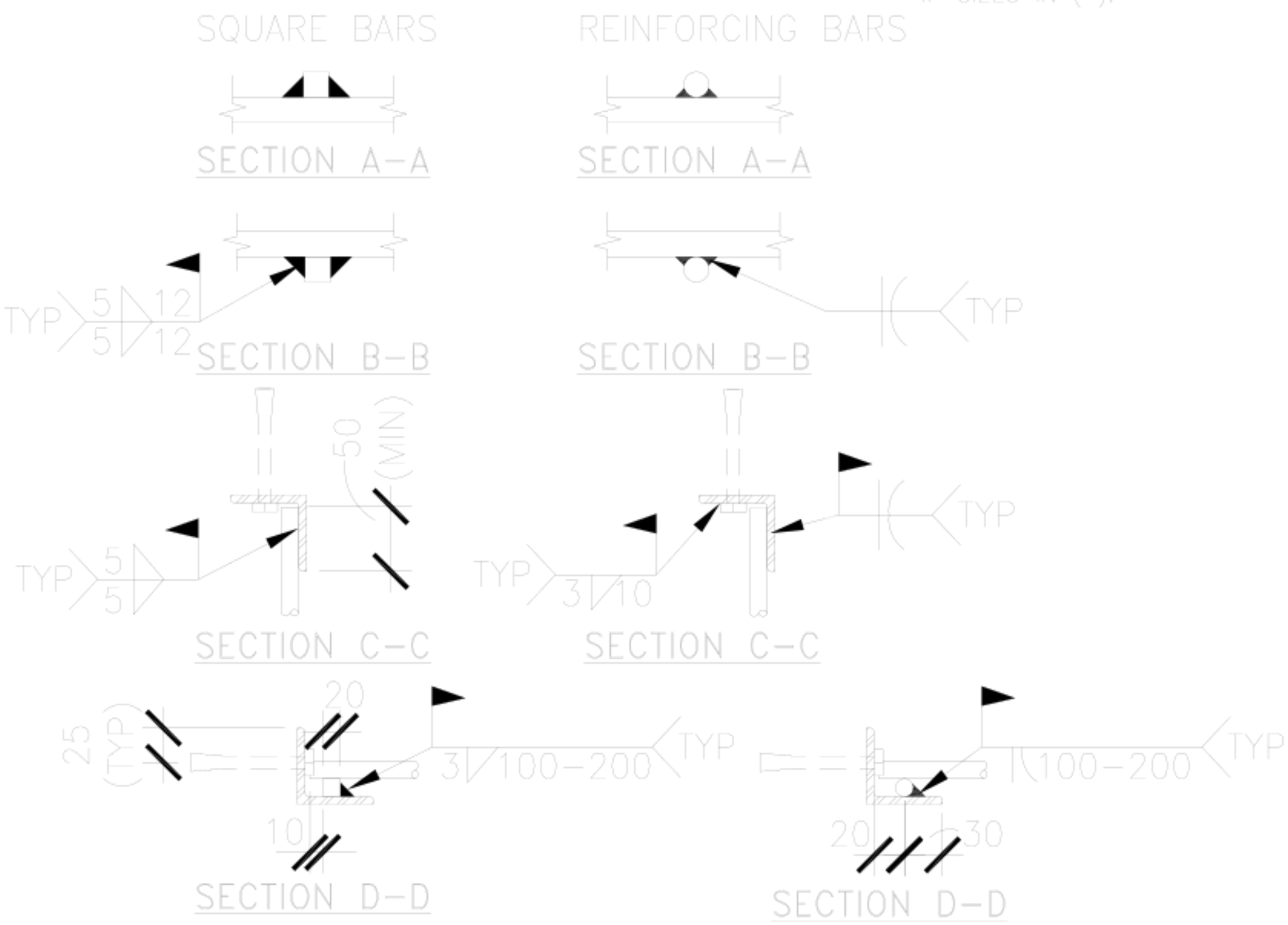


## 2 JAMB MOUNT-5 MINUTE FE DUCT GRILLE

SCALE: N.T.S.

NOTE: THESE GRILLES ARE USED AT WINDOW OPENINGS, DUCT PENETRATIONS AND OTHER OPENINGS REQUIRING 5 MINUTE FE PROTECTION

WARNING:
This document is the property of the U.S. Government. Further reproduction and/or distribution is prohibited without the express written permission of: Overseas Buildings Operations, U.S. Department of State, Washington, DC, 20522-0620. Information on this document is not to be altered except with the written approval of the individual whose seal appears hereon.

U.S. Department of State
Office of Overseas Buildings Operations

INTERIM 5 MINUTE FE GRILLE (JAMB MOUNT)
XGW-05N-DOS-01

OBO/SEB Security Details

| | |
|---|---|
| DWG.TITLE: XGW-05N-DOS-01.dwg | |
| REV: | DATE: |
| REV: | DATE: |
| SCALE: 1:5 | SHEET: 2 OF 2 |
| DRAWN BY: | |
| DATE: January 2009 | UNCLASSIFIED |

MATERIAL NOTES:

1. STRUCTURAL GRADE PLYWOOD: CLASS – ABX E=10 MPa (1500 PSI), Fb=8273 kPa (1200 PSI), Fv=965 kPa (140 PSI)
2. ANCHORAGE SHOWN IS FOR CONCRETE ONLY. FOR OTHER SUBSTRATES, REFER TO OBO/CCM/SM/SEB FOR GUIDANCE
3. ALL DIMENSIONS ARE IN MILLIMETERS (mm)
4. ARCHITECTURAL FINISH TO BE SPECIFIED BY A/E OR OTHERS

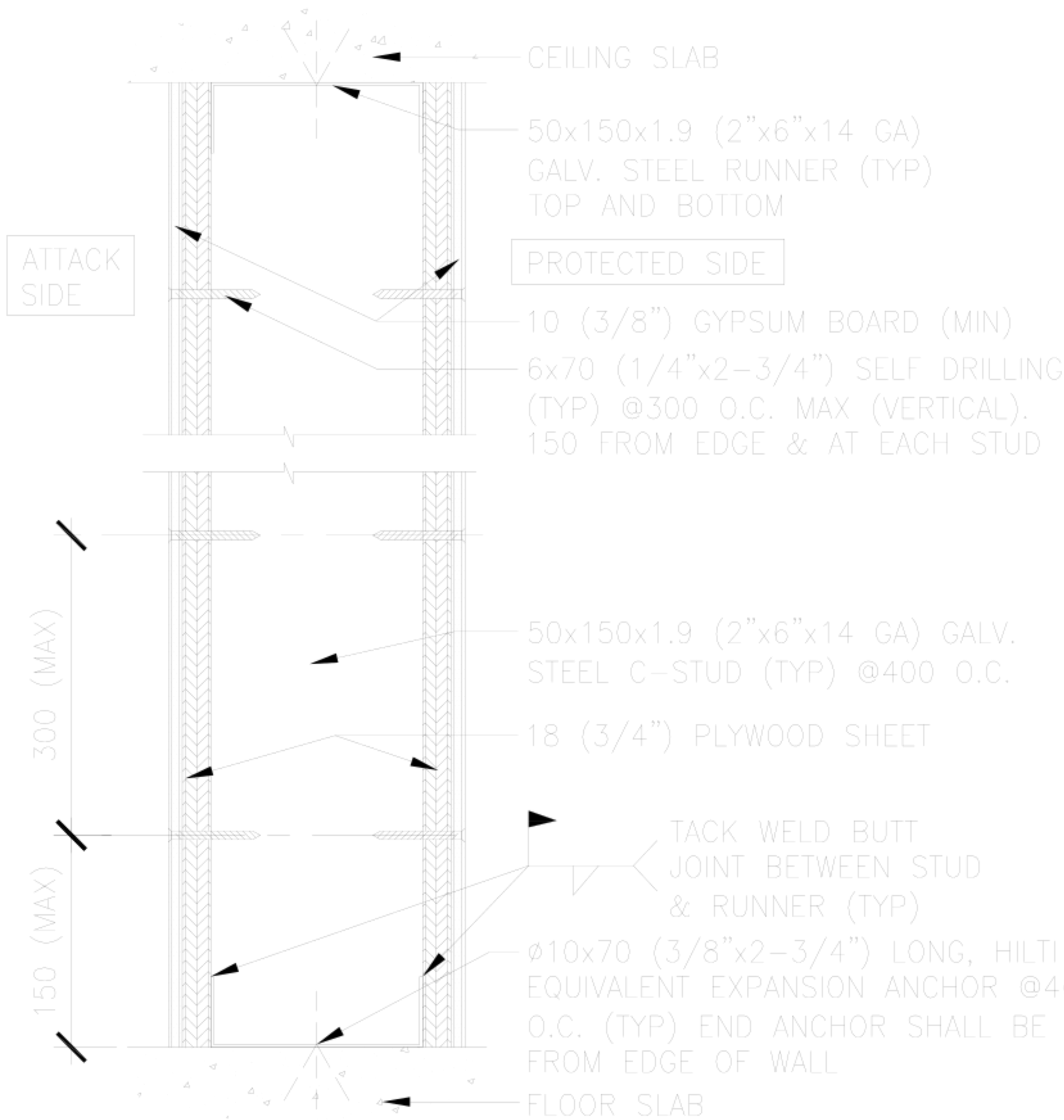


## 1 SECTION – 5 MINUTE FE HARDLINE WALL

SCALE: 1:5 NOTE: THIS WALL DESIGN IS USED WHERE 5-MINUTE FE PROTECTION IS REQUIRED

WARNING:
This document is the property of the U.S. Government. Further reproduction and/or distribution is prohibited without the express written permission of: Overseas Buildings Operations, U.S. Department of State, Washington, DC, 20522-0620. Information on this document is not to be altered except with the written approval of the individual whose seal appears hereon.

U.S. Department of State
Office of Overseas Buildings Operations

INTERIM 5 MINUTE FE WALL
COMBINATION UPGRADE
XPK-05N-DOS-04

OBO/SEB Security Details

| | |
|---|---|
| DWG.TITLE: XPK-05N-DOS-04.dwg | |
| REV: | DATE: |
| REV: | DATE: |
| SCALE: 1:5 | SHEET: 1 OF 1 |
| DRAWN BY: | |
| DATE: January 2009 | UNCLASSIFIED |

# Certified Assemblies

## 15-Minute FE/BR

Unclassified

# Certified Assemblies -15 Minute

**GGL-15N-DOS-02 – 15 Minute FE Grill**

**GPC-15R-DOS-02 - 150mm concrete wall, 20-mm (#6) @ 125mm O.C.**

**GPC-15R-DOS-03 - 250-mm (10”) reinforced concrete wall, 12mm (#4) rebar 300- mm (12”) o.c. each way, each face, rebar grids aligned.**

**GPC-15R-DOS-04 - 200-mm (8”) reinforced concrete wall, 10-mm (#3) rebar 200mm (8”) o.c. each way, each face, rebar grids aligned.**

**GPK-15A-DOS-01 - Masonry wall with 6-mm (1/4") steel each side. Armor-piercing resistant. GPK-15R-DOS-01 - Steel upgrade of reinforced concrete or solid masonry wall.**

**GPK-15R-DOS-02 - Steel upgrade of solid masonry wall.**

**GPK-15R-DOS-03 - Steel upgrade of hollow masonry wall.**

# Certified Assemblies -15 Minute

**GPK-15R-DOS-04 - Two sided upgrade to hollow masonry wall.**

**GPS-15N-DOS-02 - Steel plate & steel studs wall, provides 15-minute FE protection.**

**GPS-15R-DOS-01 - Dual steel plate and tube wall.**

**GPS-15R-DOS-02 - Alternate dual steel plate wall.**

**GPS-15R-DOS-02A - Modified GPS-15R-DOS-02.**

**XGW-15N-DOS-01 - Interim 15-min. FE window grille.**

**XGX-15N-DOS-01 - Interim 15-min. FE grille, (special above-ceiling duct penetration).**

ALL DIMENSIONS ARE IN MM.

MATERIAL SPECIFICATIONS:
ANGLES:
fy=250 MPa (36 KSI) MIN.
STEEL PLATE:
fy=250 MPa (36 KSI) MIN.

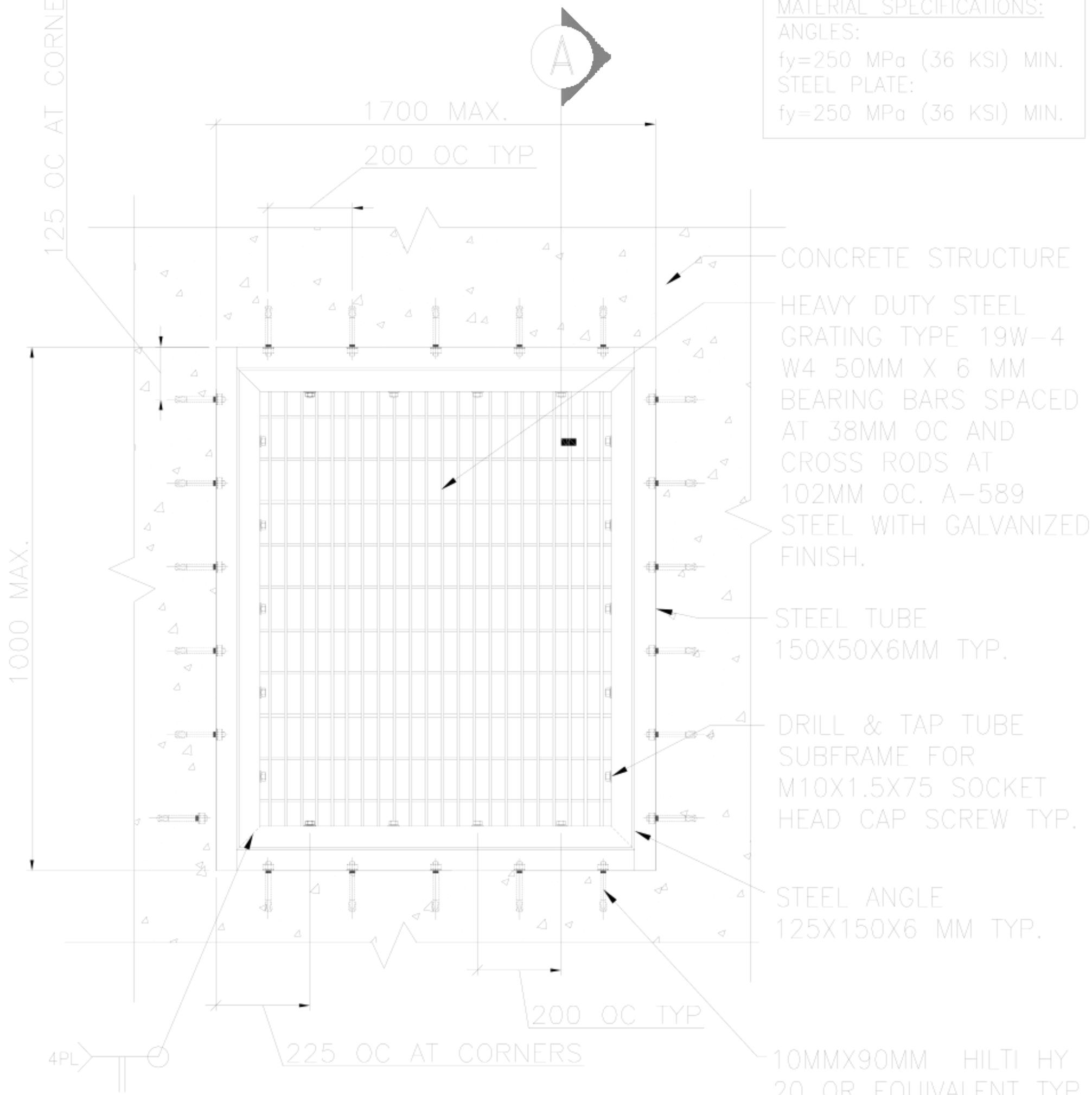


1 SECTION: 15 MINUTE FE GRILL
SCALE: NTS

NOTE: THIS GRILL IS ONLY TO BE USED AT DUCT PENETRATIONS OR OTHER OPENINGS IN CONCEALED SPACES THAT REQUIRE 15 MINUTE FE PROTECTION.

WARNING:
This document is the property of the U.S. Government. Further reproduction and/or distribution is prohibited without the express written permission of: Overseas Buildings Operations, U.S. Department of State, Washington, DC, 20522-0620. Information on this document is not to be altered except with the written approval of the individual whose seal appears hereon.

U.S. Department of State
Office of Overseas Buildings Operations

15 MINUTE FE GRILL
GGL-15N-DOS-02

OBO/SEB Security Details

| | |
|---|---|
| DWG.TITLE: GGL-15N-DOS-02.dwg | |
| REV: | DATE: |
| REV: | DATE: |
| SCALE: NTS | SHEET: 1 OF 2 |
| DRAWN BY: | |
| DATE: January 2012 | UNCLASSIFIED |

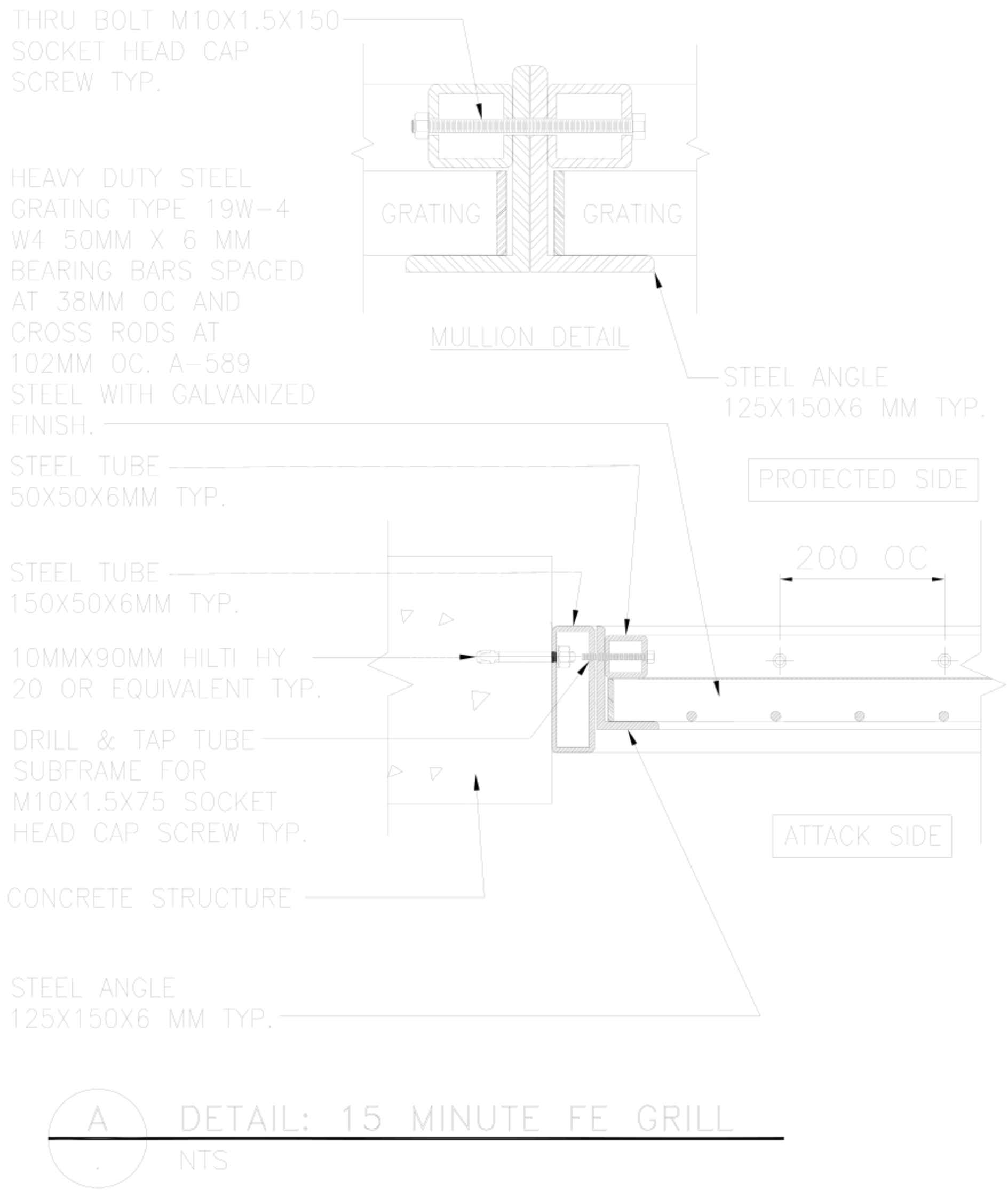


A

## DETAIL: 15 MINUTE FE GRILL

NTS

WARNING:
This document is the property of the U.S. Government. Further reproduction and/or distribution is prohibited without the express written permission of: Overseas Buildings Operations, U.S. Department of State, Washington, DC, 20522-0620. Information on this document is not to be altered except with the written approval of the individual whose seal appears hereon.

U.S. Department of State

Office of Overseas Buildings Operations

15 MINUTE FE GRILL
GGL-15N-DOS-02

OBO/SEB Security Details

| | |
|---|---|
| DWG.TITLE: GGL-15N-DOS-02.dwg | |
| REV: | DATE: |
| REV: | DATE: |
| SCALE: NTS | SHEET: 2 OF 2 |
| DRAWN BY: | |
| DATE: January 2012 | UNCLASSIFIED |

MATERIAL SPECIFICATIONS

REINFORCED STEEL:
fy=420 MPa MIN.

CONCRETE:
f'c=30 MPa MIN.

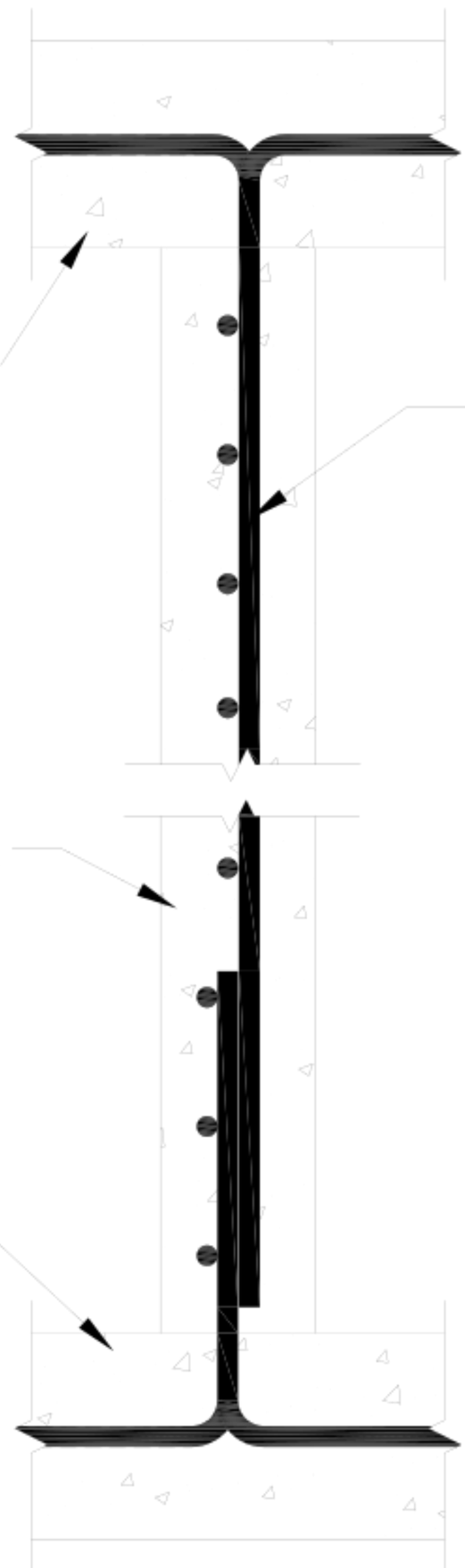


NOTE: ALL NUMBERS AND DIMENSIONS ARE IN MILLIMETERS UNO

1 SECTION – 150mm CONCRETE WALL

SCALE: 1:10

NOTE: THIS WALL DESIGN IS USED AT HARDLINE WALLS REQUIRING 15 MINUTE FE/BR PROTECTION

WARNING:
This document is the property of the U.S. Government. Further reproduction and/or distribution is prohibited without the express written permission of: Overseas Buildings Operations, U.S. Department of State, Washington, DC, 20522-0620. Information on this document is not to be altered except with the written approval of the individual whose seal appears hereon.

U.S. Department of State

Office of Overseas Buildings Operations

15 MINUTE FE/BR 150mm WALL
GPC-15R-DOS-02

OBO/SEB Security Details

| | |
|---|---|
| DWG.TITLE: GPC-15R-DOS-02.dwg | |
| REV: | DATE: |
| REV: | DATE: |
| SCALE: 1:10 | SHEET: 1 OF 4 |
| DRAWN BY: | |
| DATE: January 2009 | UNCLASSIFIED |

MATERIAL SPECIFICATIONS

REINFORCED STEEL:
fy=420 MPa MIN.

CONCRETE:
f'c=30 MPa MIN.

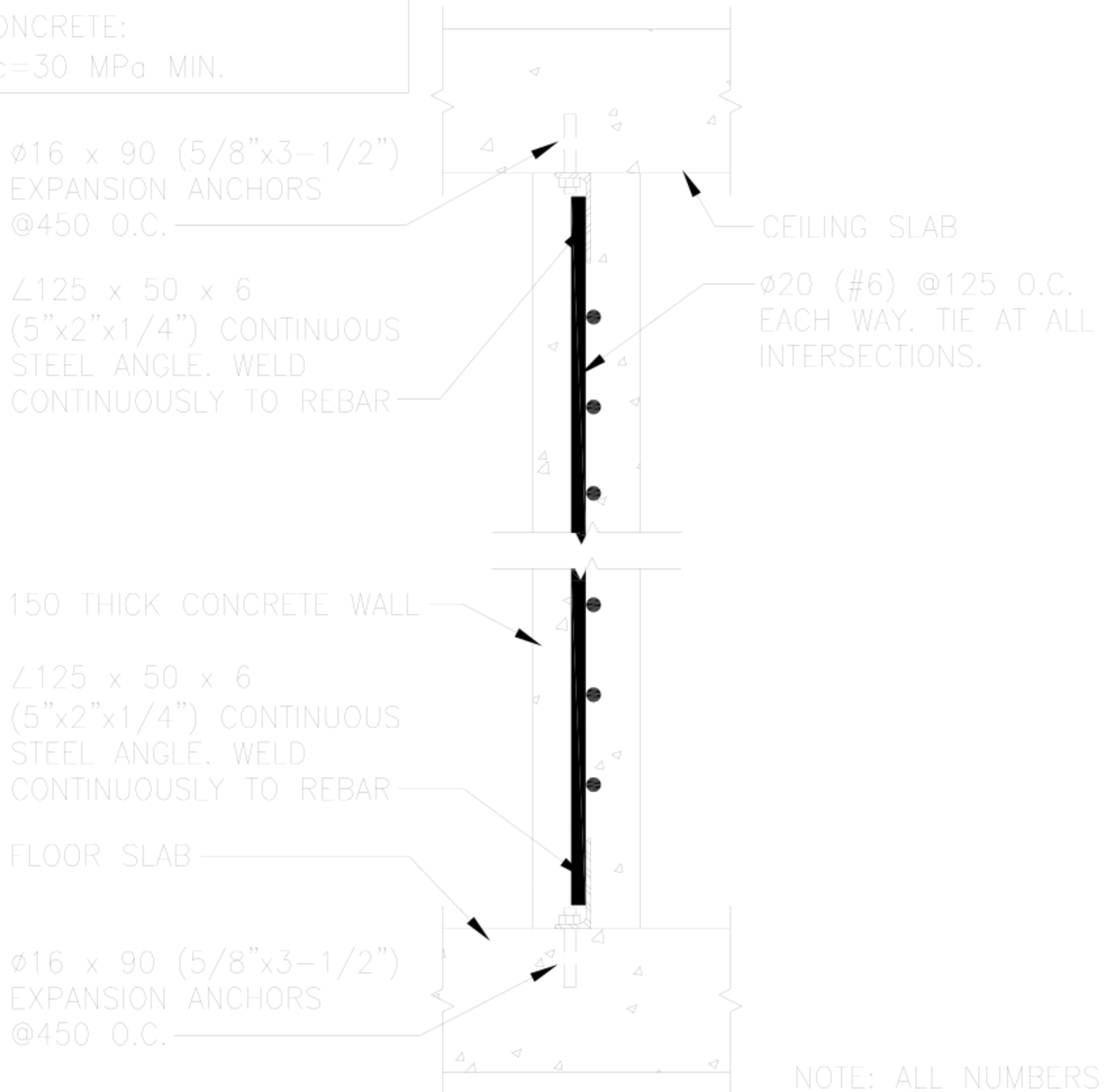


NOTE: ALL NUMBERS AND DIMENSIONS ARE IN MILLIMETERS UNO

## 2 SECTION – 150mm CONCRETE WALL

SCALE: 1:10

(RETROFIT CONDITION)
NOTE: THIS WALL DESIGN IS USED AT HARDLINE WALLS REQUIRING 15 MINUTE FE/BR PROTECTION

WARNING:
This document is the property of the U.S. Government. Further reproduction and/or distribution is prohibited without the express written permission of: Overseas Buildings Operations, U.S. Department of State, Washington, DC, 20522-0620. Information on this document is not to be altered except with the written approval of the individual whose seal appears hereon.

U.S. Department of State
Office of Overseas Buildings Operations

15 MINUTE FE/BR 150mm WALL
GPC-15R-DOS-02

OBO/SEB Security Details

| | |
|---|---|
| DWG.TITLE: GPC-15R-DOS-02.dwg | |
| REV: | DATE: |
| REV: | DATE: |
| SCALE: 1:10 | SHEET: 2 OF 4 |
| DRAWN BY: | |
| DATE: January 2009 | UNCLASSIFIED |

MATERIAL SPECIFICATIONS

REINFORCED STEEL:
fy=420 MPa MIN.

CONCRETE:
f'c=30 MPa MIN.

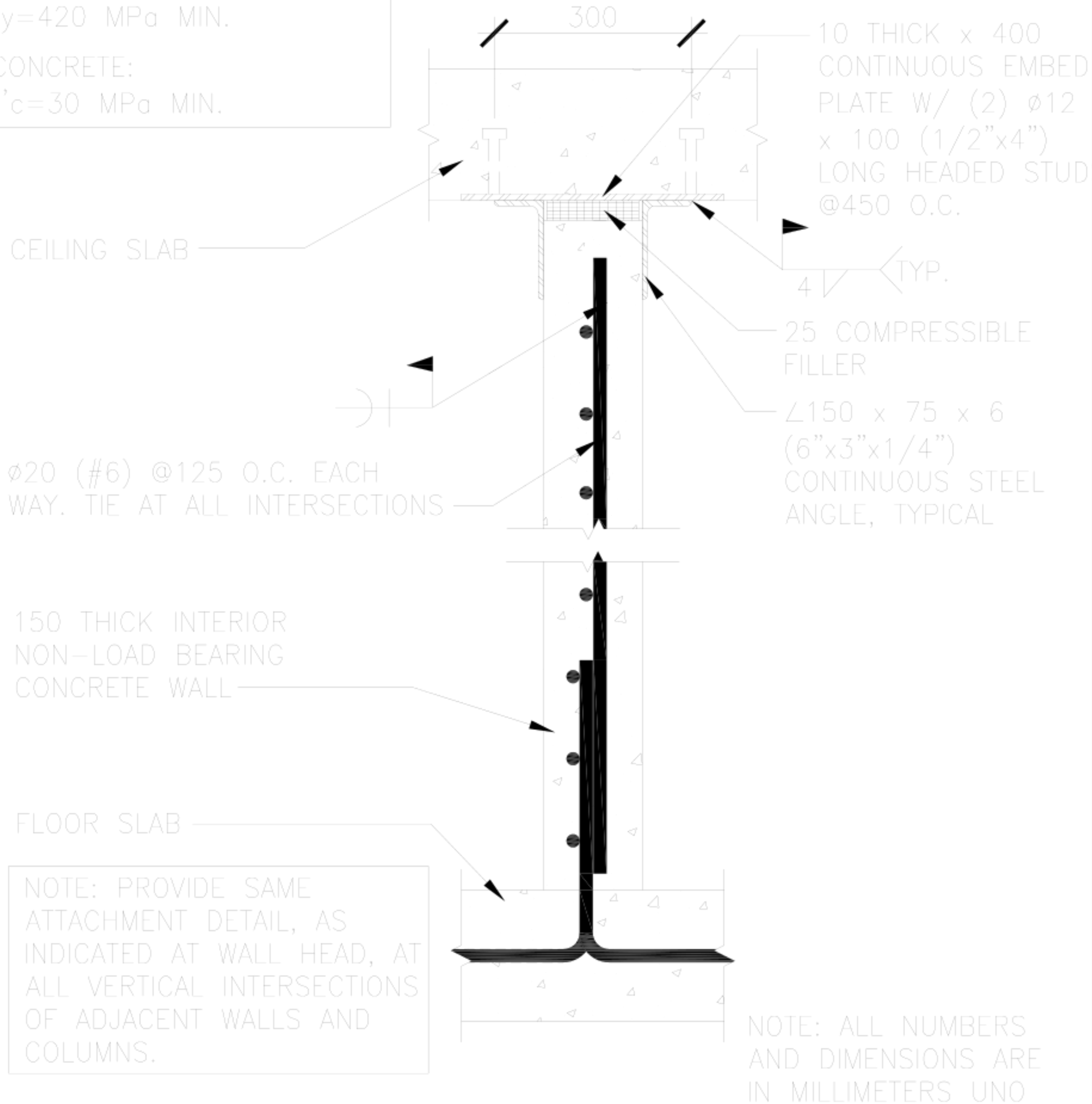


NOTE: PROVIDE SAME ATTACHMENT DETAIL, AS INDICATED AT WALL HEAD, AT ALL VERTICAL INTERSECTIONS OF ADJACENT WALLS AND COLUMNS.

NOTE: ALL NUMBERS AND DIMENSIONS ARE IN MILLIMETERS UNO

## 3 SECTION – 150mm CONCRETE WALL

SCALE: 1:10

(NON-LOAD BEARING CONDITION #1)
NOTE: THIS WALL DESIGN IS USED AT HARDLINE WALLS REQUIRING 15 MINUTE FE/BR PROTECTION

WARNING:
This document is the property of the U.S. Government. Further reproduction and/or distribution is prohibited without the express written permission of: Overseas Buildings Operations, U.S. Department of State, Washington, DC, 20522-0620. Information on this document is not to be altered except with the written approval of the individual whose seal appears hereon.

U.S. Department of State
Office of Overseas Buildings Operations

15 MINUTE FE/BR 150mm WALL
GPC-15R-DOS-02

OBO/SEB Security Details

| | |
|---|---|
| DWG.TITLE: GPC-15R-DOS-02.dwg | |
| REV: | DATE: |
| REV: | DATE: |
| SCALE: 1:10 | SHEET: 3 OF 4 |
| DRAWN BY: | |
| DATE: January 2011 | UNCLASSIFIED |

MATERIAL SPECIFICATIONS

REINFORCED STEEL:
fy=420 MPa MIN.

CONCRETE:
f'c=30 MPa MIN.

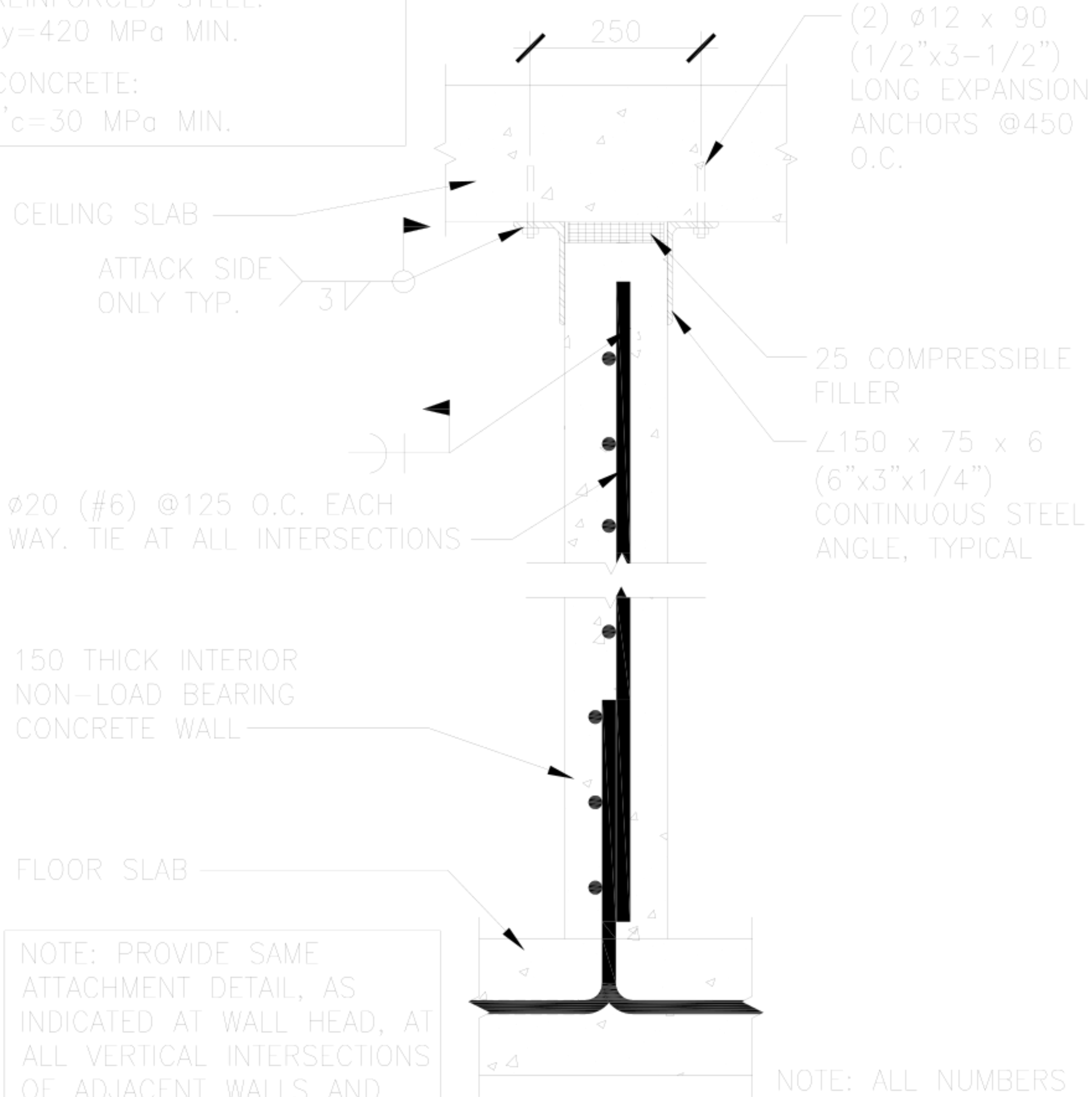


NOTE: PROVIDE SAME ATTACHMENT DETAIL, AS INDICATED AT WALL HEAD, AT ALL VERTICAL INTERSECTIONS OF ADJACENT WALLS AND COLUMNS.

NOTE: ALL NUMBERS AND DIMENSIONS ARE IN MILLIMETERS UNO

## 4 SECTION – 150mm CONCRETE WALL

SCALE: 1:10

(NON-LOAD BEARING CONDITION #2)
NOTE: THIS WALL DESIGN IS USED AT HARDLINE WALLS REQUIRING 15 MINUTE FE/BR PROTECTION

WARNING:
This document is the property of the U.S. Government. Further reproduction and/or distribution is prohibited without the express written permission of: Overseas Buildings Operations, U.S. Department of State, Washington, DC, 20522-0620. Information on this document is not to be altered except with the written approval of the individual whose seal appears hereon.

U.S. Department of State
Office of Overseas Buildings Operations

15 MINUTE FE/BR 150mm WALL
GPC-15R-DOS-02

OBO/SEB Security Details

| | |
|---|---|
| DWG.TITLE: GPC-15R-DOS-02.dwg | |
| REV: | DATE: |
| REV: | DATE: |
| SCALE: 1:10 | SHEET: 4 OF 4 |
| DRAWN BY: | |
| DATE: January 2011 | UNCLASSIFIED |

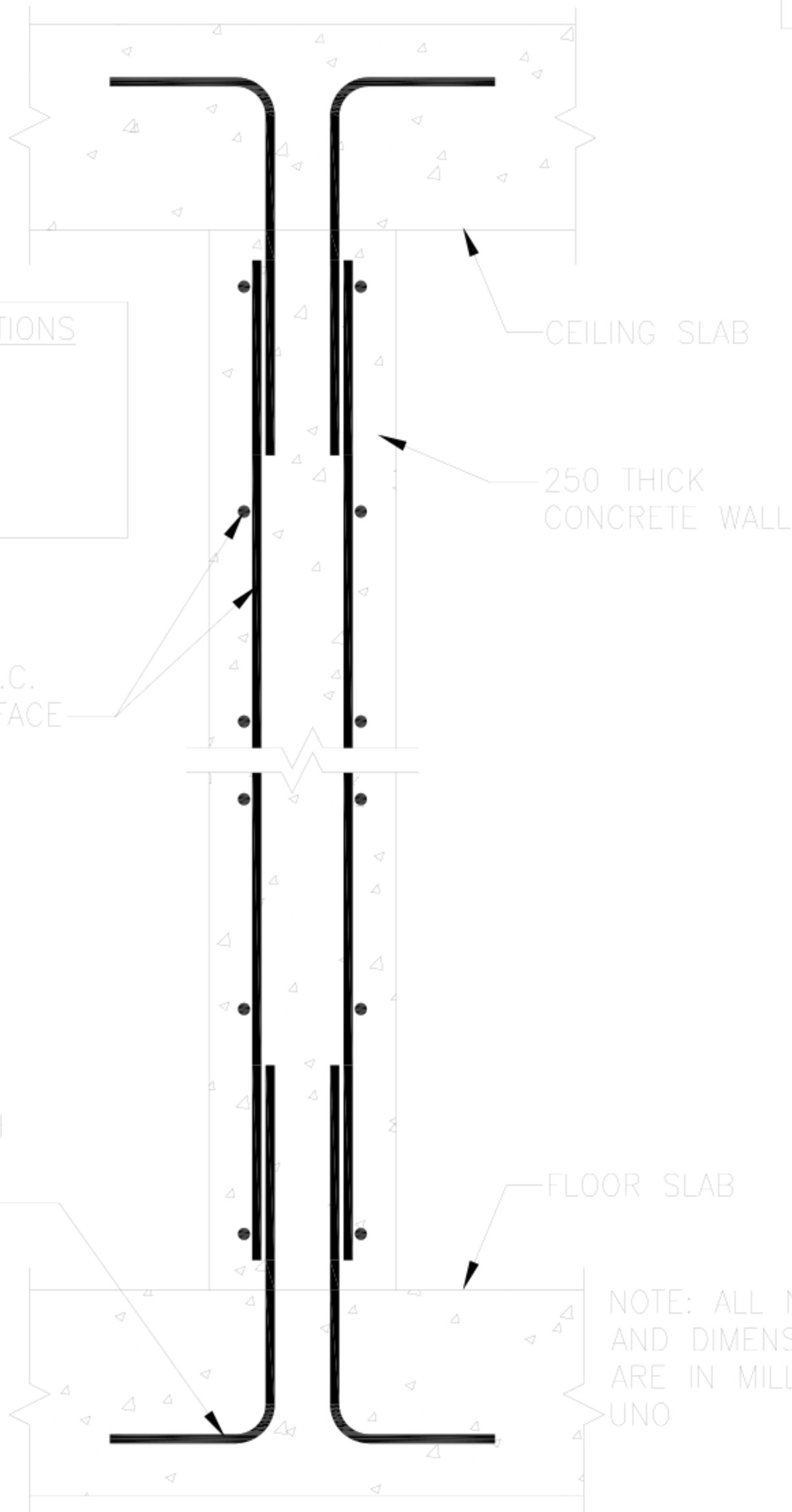


MATERIAL SPECIFICATIONS

REINFORCED STEEL:
fy=420 MPa MIN.

CONCRETE:
f'c=30 MPa MIN.

NOTE: ALL NUMBERS AND DIMENSIONS ARE IN MILLIMETERS UNO

1 SECTION – 250mm CONCRETE WALL

SCALE: 1:10

NOTE: THIS WALL DESIGN IS USED AT HARDLINE WALLS REQUIRING 15 MINUTE FE/BR PROTECTION

WARNING:
This document is the property of the U.S. Government. Further reproduction and/or distribution is prohibited without the express written permission of: Overseas Buildings Operations, U.S. Department of State, Washington, DC, 20522-0620. Information on this document is not to be altered except with the written approval of the individual whose seal appears hereon.

U.S. Department of State

Office of Overseas Buildings Operations

15 MINUTE FE/BR 250mm WALL
GPC-15R-DOS-03

OBO/SEB Security Details

| | |
|---|---|
| DWG.TITLE: GPC-15R-DOS-03.dwg | |
| REV: | DATE: |
| REV: | DATE: |
| SCALE: 1:10 | SHEET: 1 OF 4 |
| DRAWN BY: | |
| DATE: January 200 | UNCLASSIFIED |

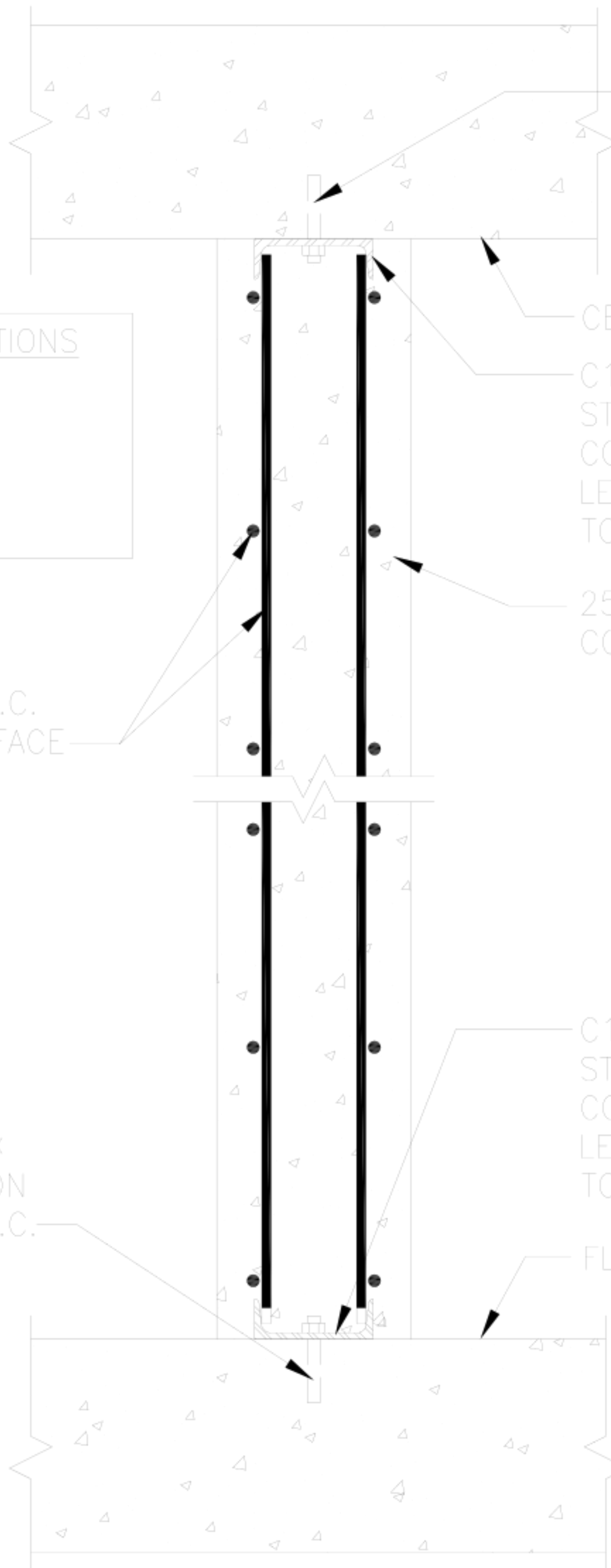


MATERIAL SPECIFICATIONS

REINFORCED STEEL:
fy=420 MPa MIN.

CONCRETE:
f'c=30 MPa MIN.

NOTE: ALL NUMBERS AND DIMENSIONS ARE IN MILLIMETERS UNO

## 2 SECTION - 250mm CONCRETE WALL

SCALE: 1:10 (RETRO FIT CONDITION)

NOTE: THIS WALL DESIGN IS USED AT HARDLINE WALLS REQUIRING 15 MINUTE FE/BR PROTECTION

WARNING:
This document is the property of the U.S. Government. Further reproduction and/or distribution is prohibited without the express written permission of: Overseas Buildings Operations, U.S. Department of State, Washington, DC, 20522-0620. Information on this document is not to be altered except with the written approval of the individual whose seal appears hereon.

U.S. Department of State

Office of Overseas Buildings Operations

15 MINUTE FE/BR 250mm WALL
GPC-15R-DOS-03

OBO/SEB Security Details

| | |
|---|---|
| DWG.TITLE: GPC-15R-DOS-03.dwg | |
| REV: | DATE: |
| REV: | DATE: |
| SCALE: 1:10 | SHEET: 2 OF 4 |
| DRAWN BY: | |
| DATE: January 2009 | UNCLASSIFIED |

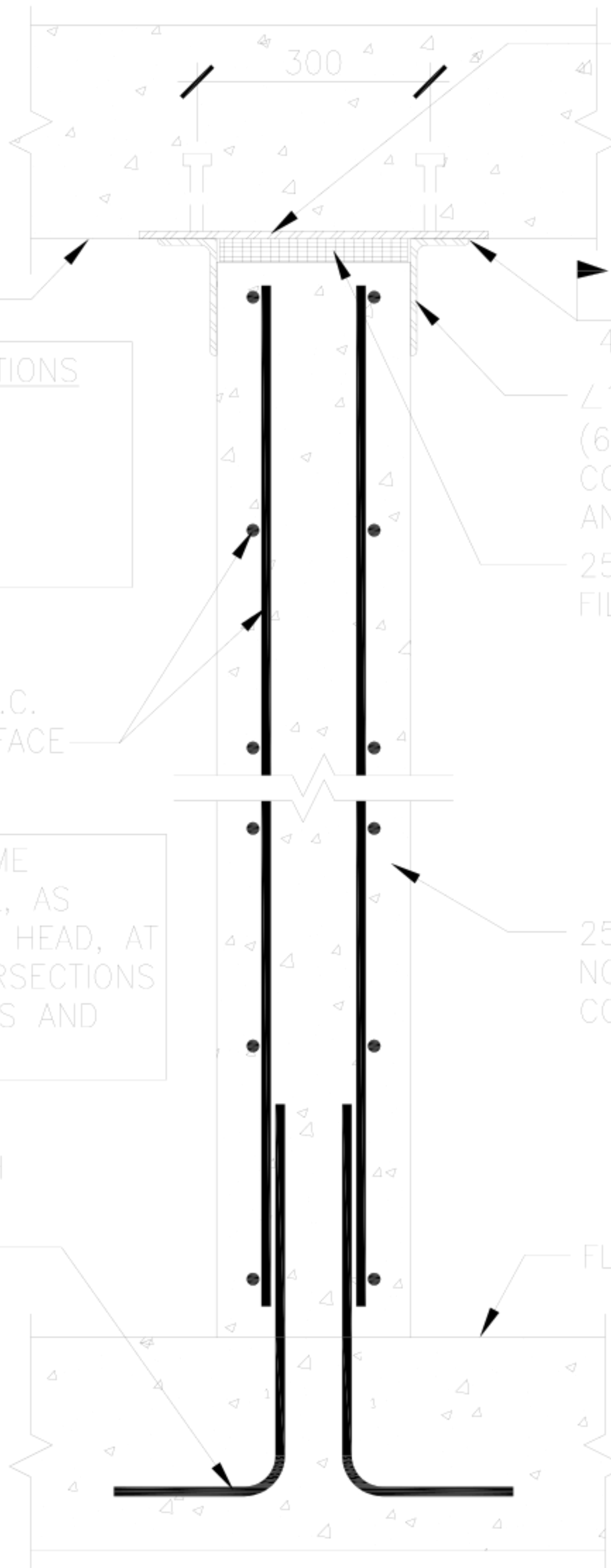


MATERIAL SPECIFICATIONS

REINFORCED STEEL:
fy=420 MPa MIN.

CONCRETE:
f'c=30 MPa MIN.

NOTE: PROVIDE SAME ATTACHMENT DETAIL, AS INDICATED AT WALL HEAD, AT ALL VERTICAL INTERSECTIONS OF ADJACENT WALLS AND COLUMNS.

NOTE: ALL NUMBERS AND DIMENSIONS ARE IN MILLIMETERS UNO

## 3 SECTION – 250mm CONCRETE WALL

SCALE: 1:10 (NON-LOAD BEARING CONDITION #1)

NOTE: THIS WALL DESIGN IS USED AT HARDLINE WALLS REQUIRING 15 MINUTE FE/BR PROTECTION

WARNING:
This document is the property of the U.S. Government. Further reproduction and/or distribution is prohibited without the express written permission of: Overseas Buildings Operations, U.S. Department of State, Washington, DC, 20522-0620. Information on this document is not to be altered except with the written approval of the individual whose seal appears hereon.

U.S. Department of State
Office of Overseas Buildings Operations

15 MINUTE FE/BR 250mm WALL
GPC-15R-DOS-03

OBO/SEB Security Details

| | |
|---|---|
| DWG.TITLE: GPC-15R-DOS-03.dwg | |
| REV: | DATE: |
| REV: | DATE: |
| SCALE: 1:10 | SHEET: 3 OF 4 |
| DRAWN BY: | |
| DATE: January 2011 | UNCLASSIFIED |

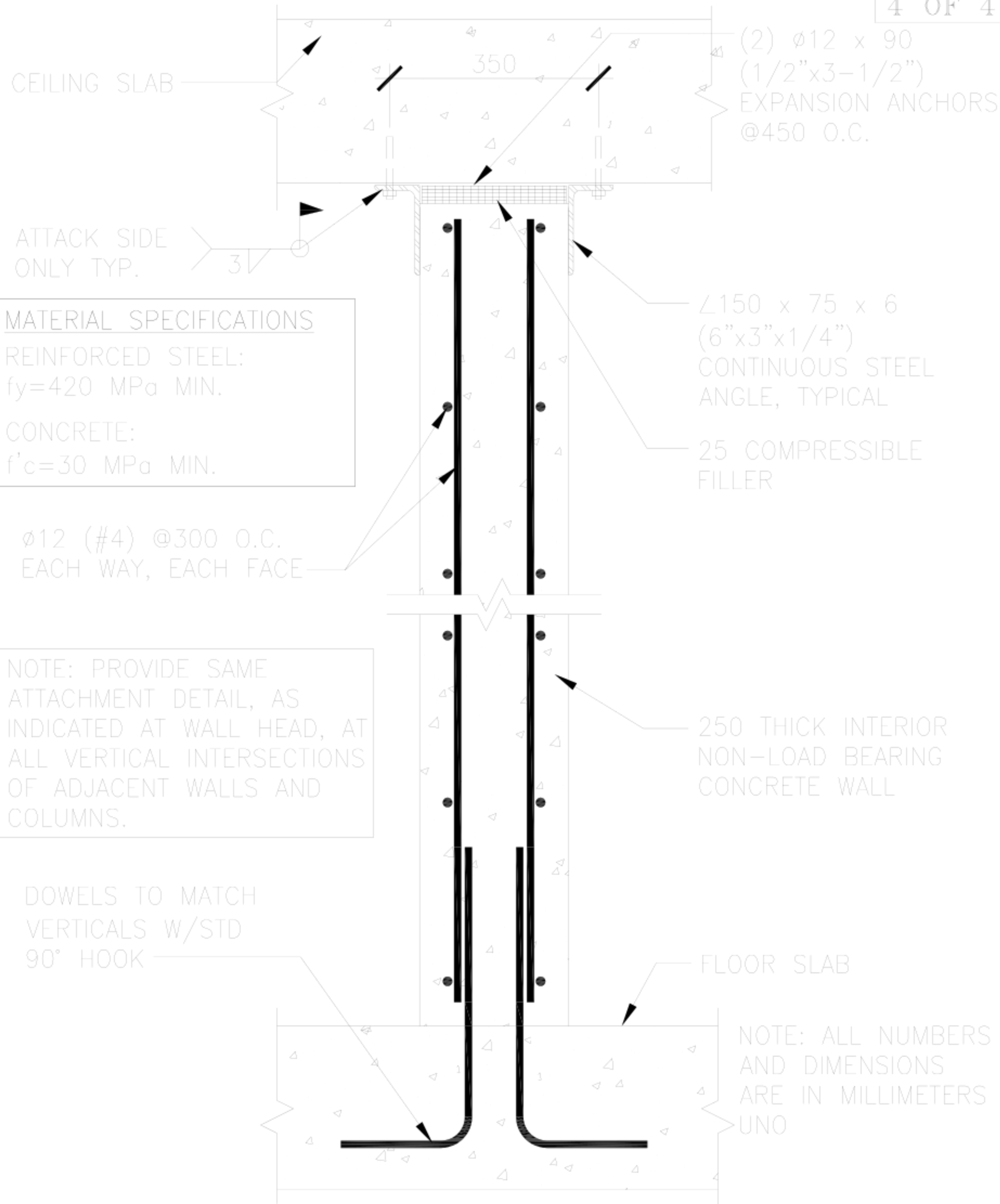


MATERIAL SPECIFICATIONS

REINFORCED STEEL:
fy=420 MPa MIN.

CONCRETE:
f'c=30 MPa MIN.

NOTE: PROVIDE SAME ATTACHMENT DETAIL, AS INDICATED AT WALL HEAD, AT ALL VERTICAL INTERSECTIONS OF ADJACENT WALLS AND COLUMNS.

NOTE: ALL NUMBERS AND DIMENSIONS ARE IN MILLIMETERS UNO

## 4 SECTION – 250mm CONCRETE WALL

SCALE: 1:10 (NON-LOAD BEARING CONDITION #2)

NOTE: THIS WALL DESIGN IS USED AT HARDLINE WALLS REQUIRING 15 MINUTE FE/BR PROTECTION

WARNING:
This document is the property of the U.S. Government. Further reproduction and/or distribution is prohibited without the express written permission of: Overseas Buildings Operations, U.S. Department of State, Washington, DC, 20522-0620. Information on this document is not to be altered except with the written approval of the individual whose seal appears hereon.

U.S. Department of State
Office of Overseas Buildings Operations

15 MINUTE FE/BR 250mm WALL
GPC-15R-DOS-03

OBO/SEB Security Details

| | |
|---|---|
| DWG.TITLE: GPC-15R-DOS-03.dwg | |
| REV: | DATE: |
| REV: | DATE: |
| SCALE: 1:10 | SHEET: 4 OF 4 |
| DRAWN BY: | |
| DATE: January 2011 | UNCLASSIFIED |

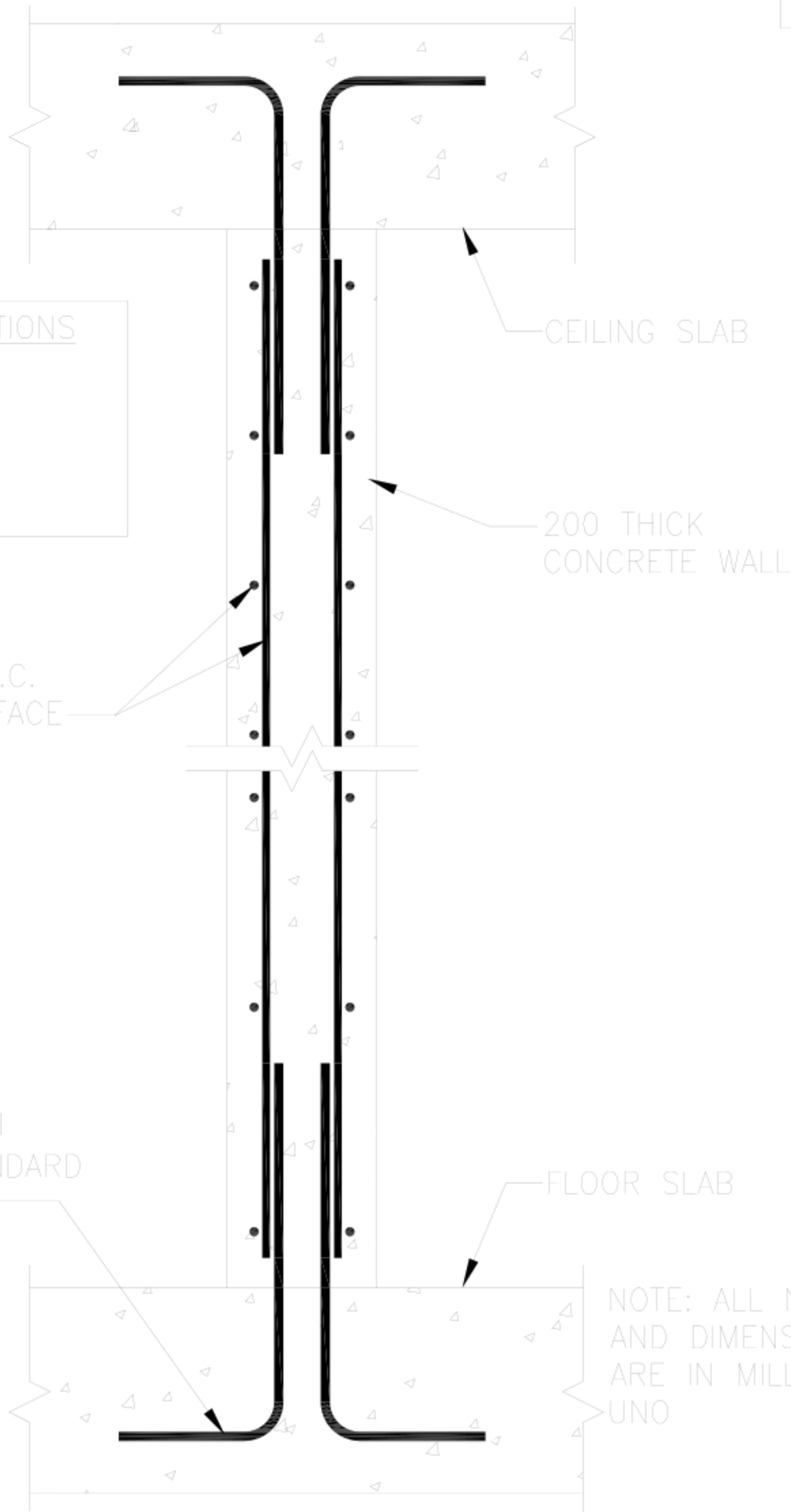


MATERIAL SPECIFICATIONS

REINFORCED STEEL:
fy=420 MPa MIN.

CONCRETE:
f'c=30 MPa MIN.

NOTE: ALL NUMBERS AND DIMENSIONS ARE IN MILLIMETERS UNO

1 SECTION – 200mm CONCRETE WALL
SCALE: 1:10

NOTE: THIS WALL DESIGN IS USED AT HARDLINE WALLS REQUIRING 15 MINUTE FE/BR PROTECTION

WARNING:
This document is the property of the U.S. Government. Further reproduction and/or distribution is prohibited without the express written permission of: Overseas Buildings Operations, U.S. Department of State, Washington, DC, 20522-0620. Information on this document is not to be altered except with the written approval of the individual whose seal appears hereon.

U.S. Department of State
Office of Overseas Buildings Operations

15 MINUTE FE/BR 200mm WALL
GPC-15R-DOS-04

OBO/SEB Security Details

| | |
|---|---|
| DWG.TITLE: GPC-15R-DOS-04.dwg | |
| REV: | DATE: |
| REV: | DATE: |
| SCALE: 1:10 | SHEET: 1 OF 4 |
| DRAWN BY: | |
| DATE: January 2009 | UNCLASSIFIED |

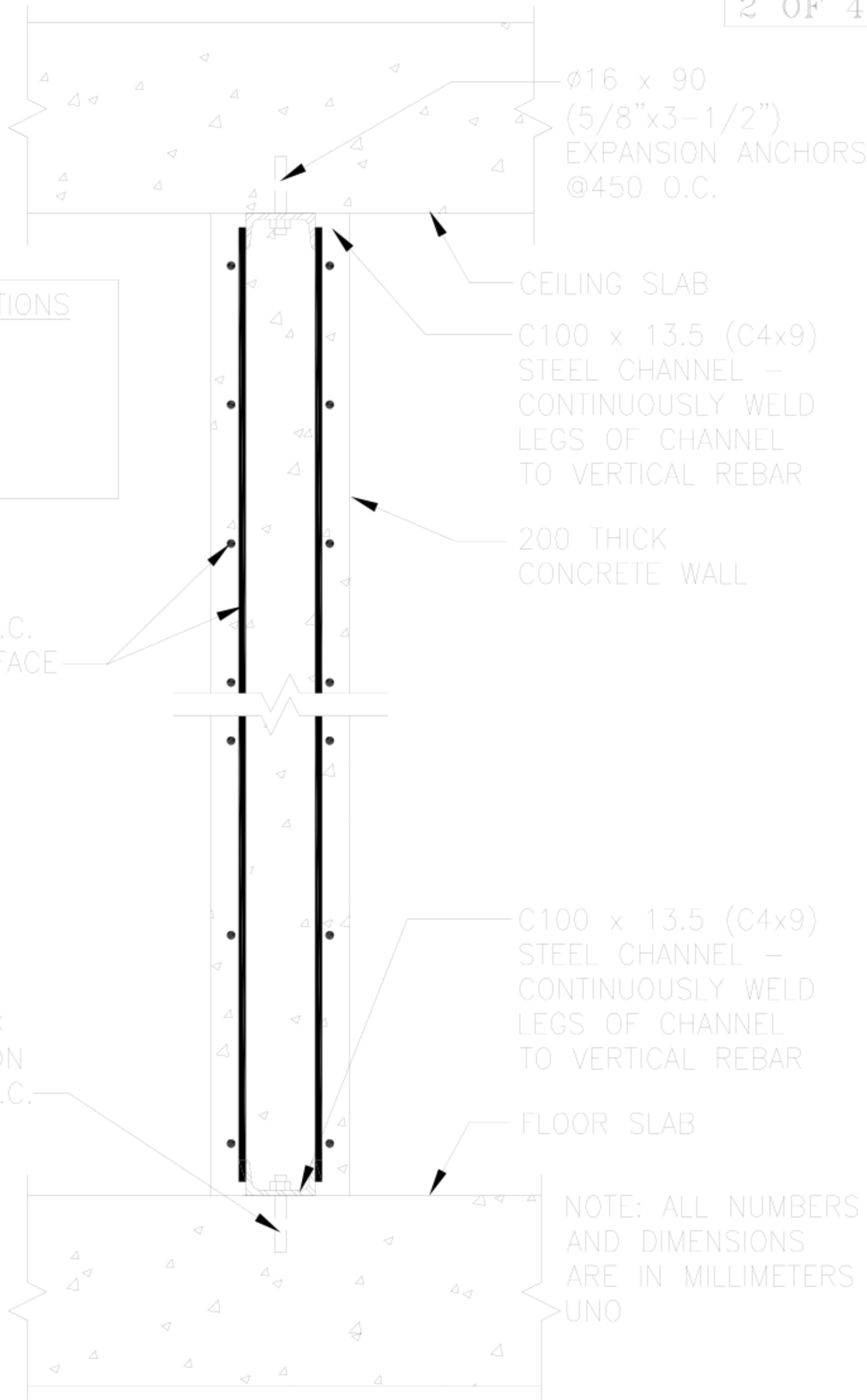


MATERIAL SPECIFICATIONS

REINFORCED STEEL:
fy=420 MPa MIN.

CONCRETE:
f'c=30 MPa MIN.

NOTE: ALL NUMBERS AND DIMENSIONS ARE IN MILLIMETERS UNO

## 2 SECTION - 200mm CONCRETE WALL

SCALE: 1:10 (RETRO FIT CONDITION)

NOTE: THIS WALL DESIGN IS USED AT HARDLINE WALLS REQUIRING 15 MINUTE FE/BR PROTECTION

WARNING:
This document is the property of the U.S. Government. Further reproduction and/or distribution is prohibited without the express written permission of: Overseas Buildings Operations, U.S. Department of State, Washington, DC, 20522-0620. Information on this document is not to be altered except with the written approval of the individual whose seal appears hereon.

U.S. Department of State

Office of Overseas Buildings Operations

15 MINUTE FE/BR 200mm WALL
GPC-15R-DOS-04

OBO/SEB Security Details

| | |
|---|---|
| DWG.TITLE: GPC-15R-DOS-04.dwg | |
| REV: | DATE: |
| REV: | DATE: |
| SCALE: 1:10 | SHEET: 2 OF 4 |
| DRAWN BY: | |
| DATE: January 2009 | UNCLASSIFIED |

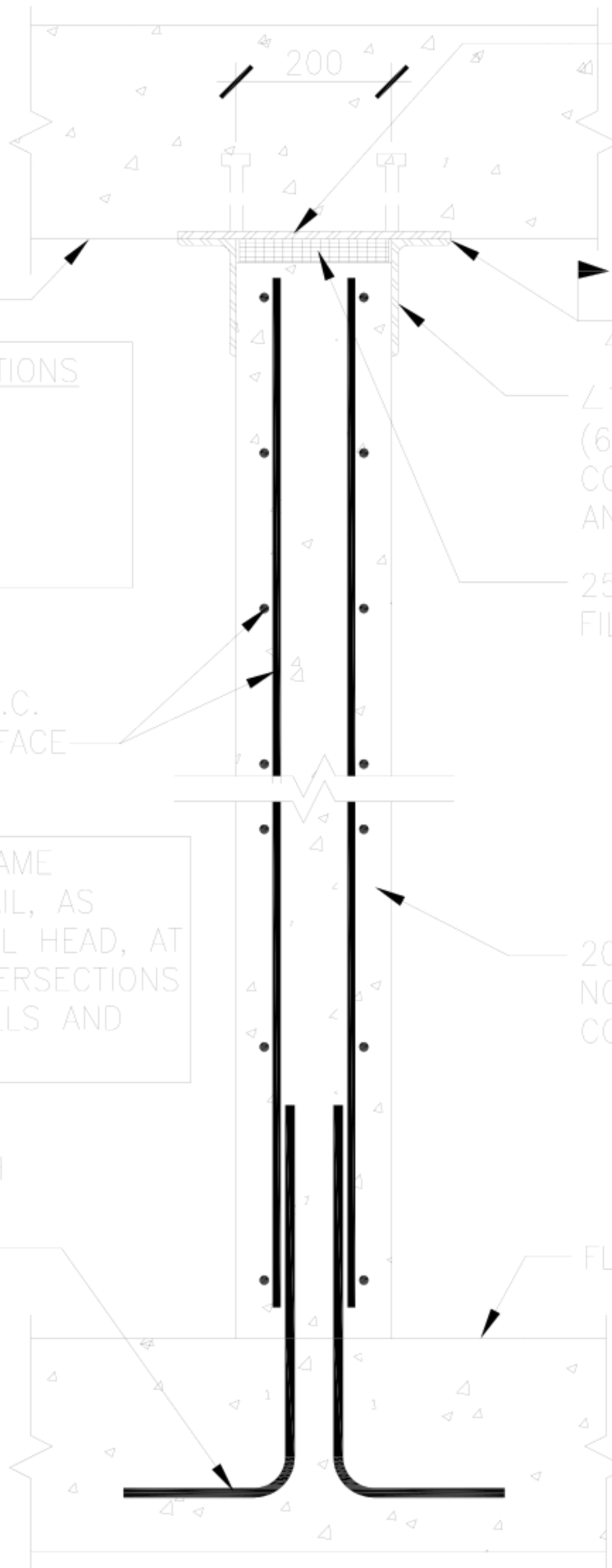


MATERIAL SPECIFICATIONS

REINFORCED STEEL:
fy=420 MPa MIN.

CONCRETE:
f'c=30 MPa MIN.

NOTE: PROVIDE SAME ATTACHMENT DETAIL, AS INDICATED AT WALL HEAD, AT ALL VERTICAL INTERSECTIONS OF ADJACENT WALLS AND COLUMNS.

NOTE: ALL NUMBERS AND DIMENSIONS ARE IN MILLIMETERS UNO

## 3 SECTION – 200mm CONCRETE WALL

SCALE: 1:10 (NON-LOAD BEARING CONDITION #1)

NOTE: THIS WALL DESIGN IS USED AT HARDLINE WALLS REQUIRING 15 MINUTE FE/BR PROTECTION

WARNING:
This document is the property of the U.S. Government. Further reproduction and/or distribution is prohibited without the express written permission of: Overseas Buildings Operations, U.S. Department of State, Washington, DC, 20522-0620. Information on this document is not to be altered except with the written approval of the individual whose seal appears hereon.

U.S. Department of State
Office of Overseas Buildings Operations

15 MINUTE FE/BR 200mm WALL
GPC-15R-DOS-04

OBO/SEB Security Details

| | |
|---|---|
| DWG.TITLE: GPC-15R-DOS-04.dwg | |
| REV: | DATE: |
| REV: | DATE: |
| SCALE: 1:10 | SHEET: 3 OF 4 |
| DRAWN BY: | |
| DATE: January 2011 | UNCLASSIFIED |

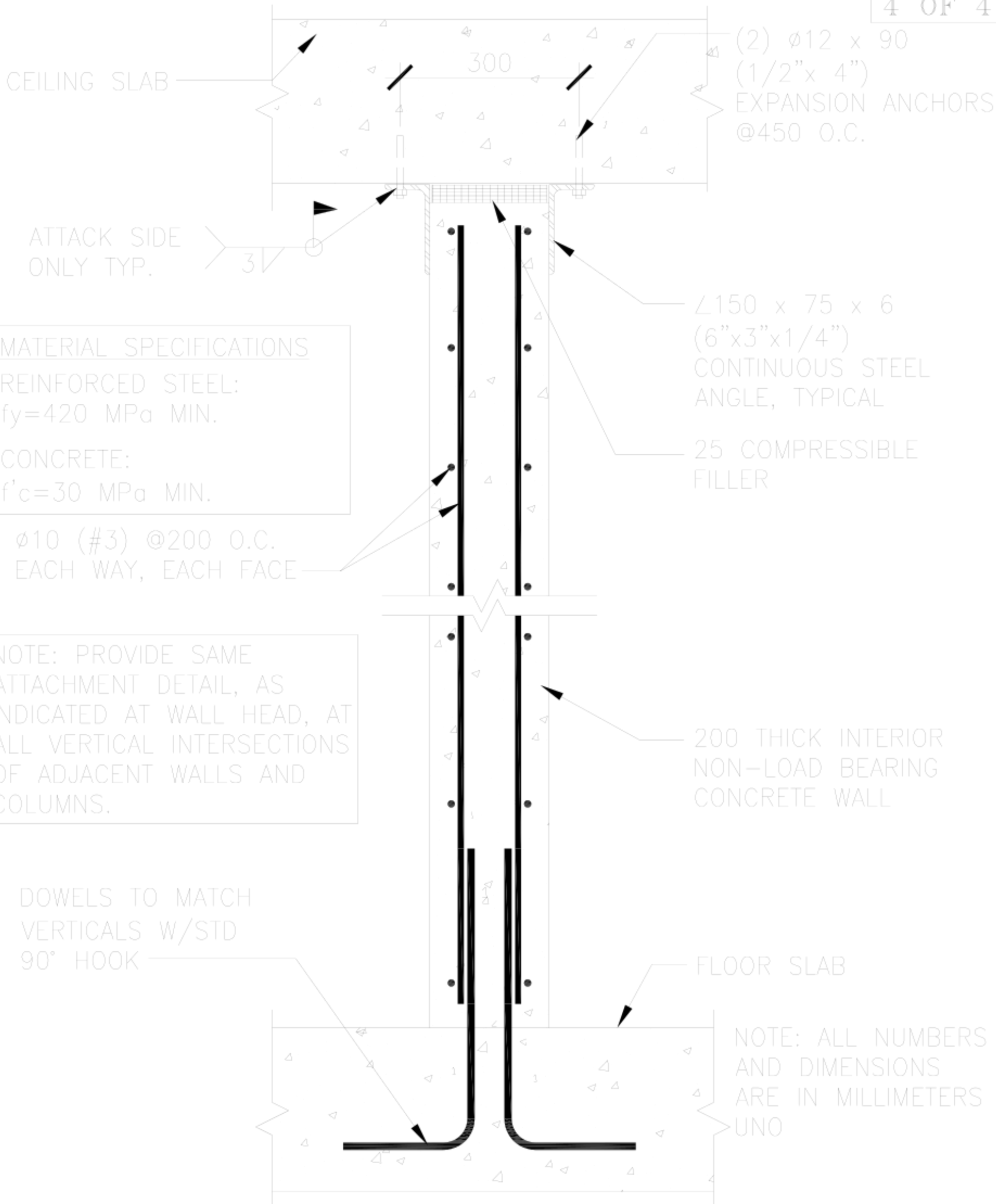


MATERIAL SPECIFICATIONS

REINFORCED STEEL:
fy=420 MPa MIN.

CONCRETE:
f'c=30 MPa MIN.

NOTE: PROVIDE SAME ATTACHMENT DETAIL, AS INDICATED AT WALL HEAD, AT ALL VERTICAL INTERSECTIONS OF ADJACENT WALLS AND COLUMNS.

NOTE: ALL NUMBERS AND DIMENSIONS ARE IN MILLIMETERS UNO

4 SECTION – 200mm CONCRETE WALL

SCALE: 1:10 (NON-LOAD BEARING CONDITION #2)

NOTE: THIS WALL DESIGN IS USED AT HARDLINE WALLS REQUIRING 15 MINUTE FE/BR PROTECTION

WARNING:
This document is the property of the U.S. Government. Further reproduction and/or distribution is prohibited without the express written permission of: Overseas Buildings Operations, U.S. Department of State, Washington, DC, 20522-0620. Information on this document is not to be altered except with the written approval of the individual whose seal appears hereon.

U.S. Department of State

Office of Overseas Buildings Operations

15 MINUTE FE/BR 200mm WALL
GPC-15R-DOS-04

OBO/SEB Security Details

| | |
|---|---|
| DWG.TITLE: GPC-15R-DOS-04.dwg | |
| REV: | DATE: |
| REV: | DATE: |
| SCALE: 1:10 | SHEET: 4 OF 4 |
| DRAWN BY: | |
| DATE: January 2011 | UNCLASSIFIED |

MATERIAL SPECIFICATIONS

STEEL PLATE & ANGLES:
fy=250 MPa MIN.

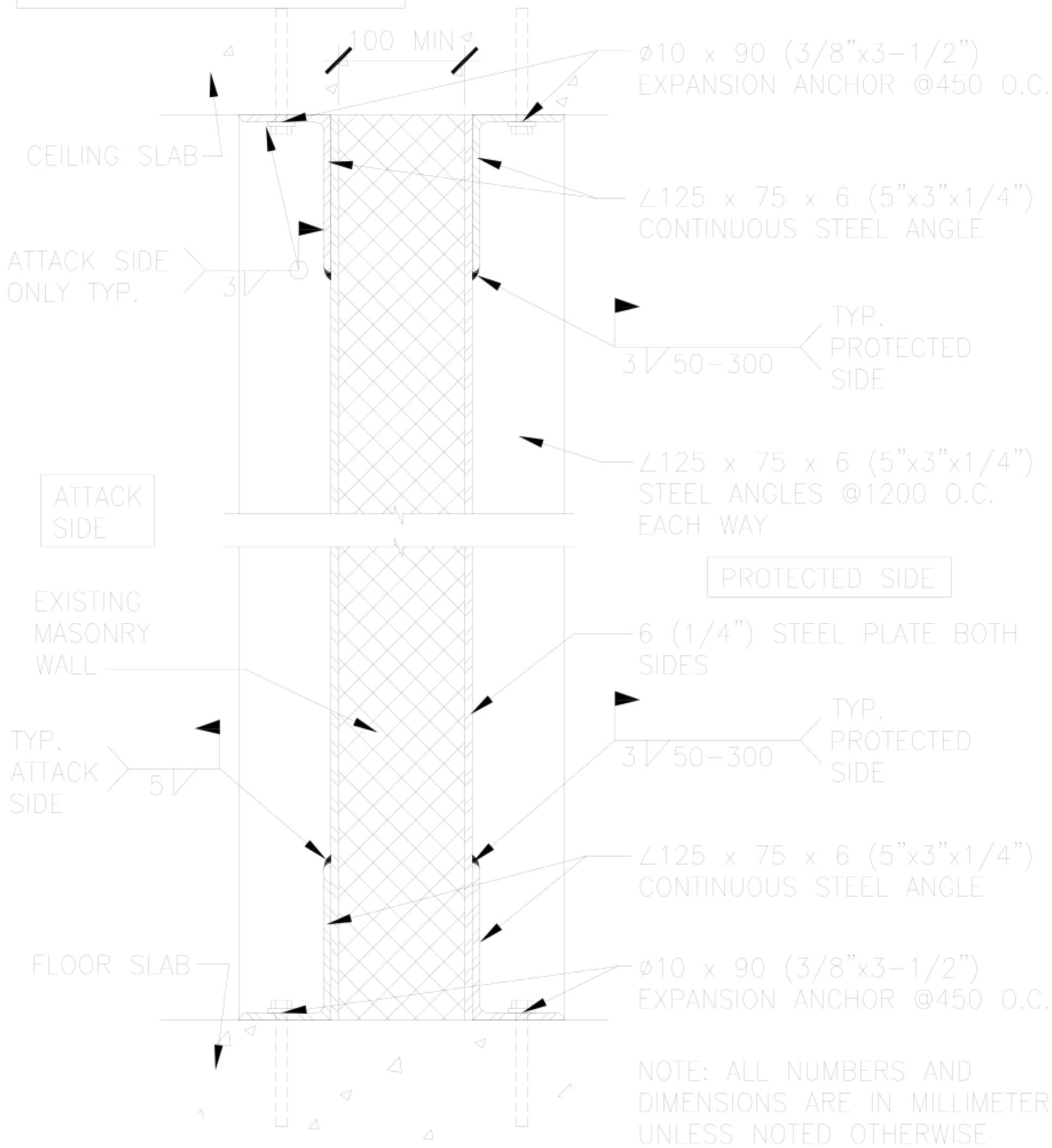


NOTE: ALL NUMBERS AND
DIMENSIONS ARE IN MILLIMETERS
UNLESS NOTED OTHERWISE

1 SECTION – UPGRADE 15 MINUTE WALL

SCALE: 1:5

NOTE: THIS DESIGN IS USED ON RENOVATION PROJECTS WHERE EXISTING WALLS REQUIRE UPGRADE TO 15 MINUTE FE/BR PROTECTION

WARNING:
This document is the property of the U.S. Government. Further reproduction and/or distribution is prohibited without the express written permission of: Overseas Buildings Operations, U.S. Department of State, Washington, DC, 20522-0620. Information on this document is not to be altered except with the written approval of the individual whose seal appears hereon.

U.S. Department of State

Office of
Overseas Buildings Operations

15 MINUTE MASONRY WALL W/ 6mm STEEL EACH SIDE ARMOR PIERCING
GPK-15A-DOS-01

OBO/SEB Security Details

| | |
|---|---|
| DWG.TITLE: GPK-15A-DOS-01.dwg | |
| REV: | DATE: |
| REV: | DATE: |
| SCALE: 1:5 | SHEET: 1 OF 1 |
| DRAWN BY: | |
| DATE: January 2009 | UNCLASSIFIED |

MATERIAL SPECIFICATIONS

STEEL PLATE & ANGLES:
fy=250 MPa MIN.

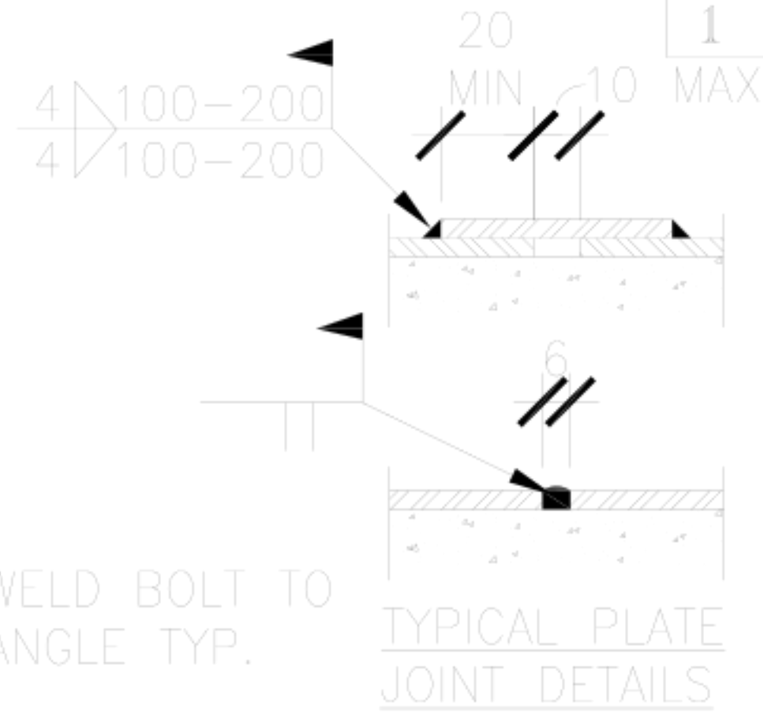


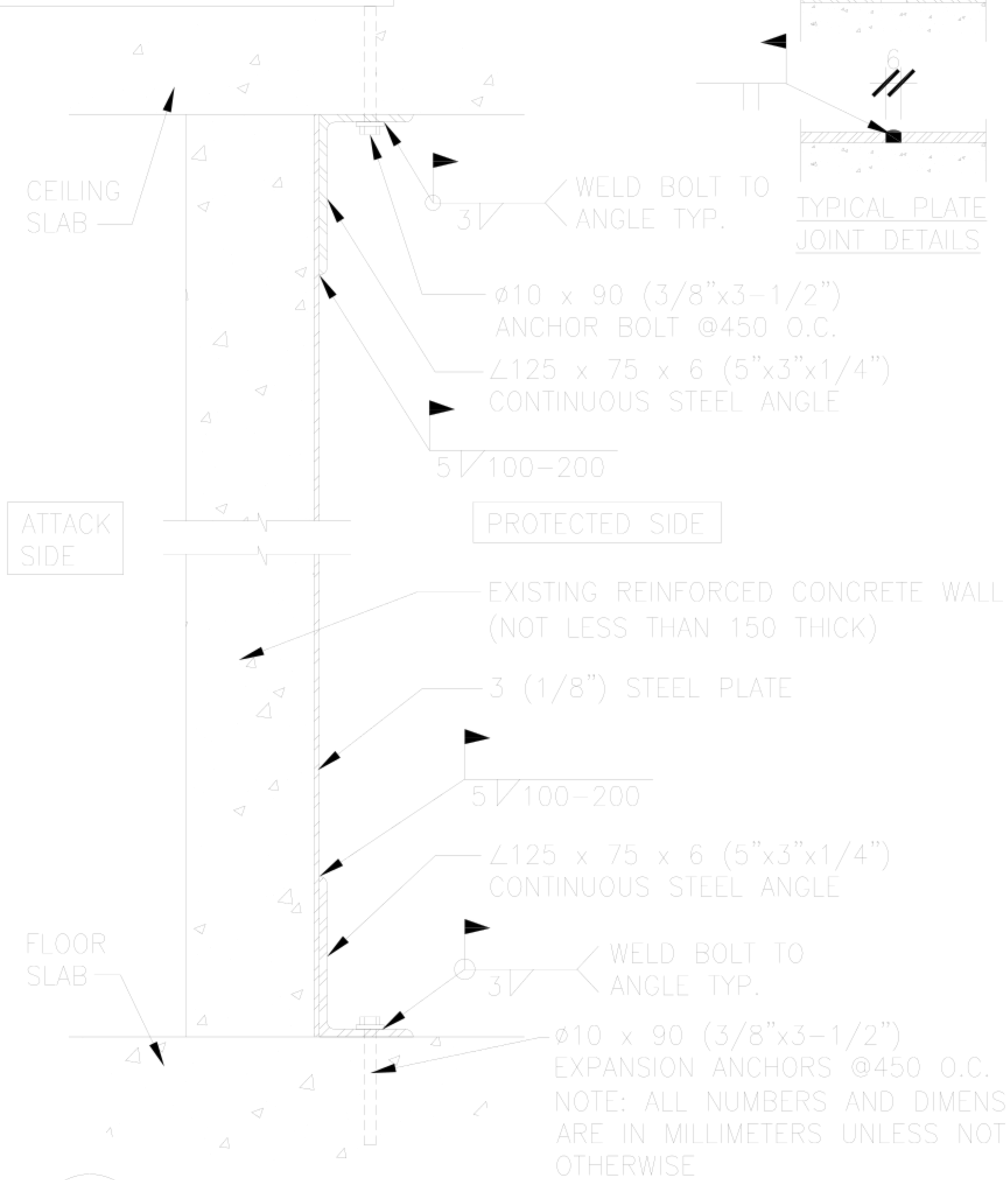


NOTE: ALL NUMBERS AND DIMENSIONS ARE IN MILLIMETERS UNLESS NOTED OTHERWISE

1 SECTION – UPGRADE 15 MINUTE WALL

SCALE: 1:5

NOTE: THIS DESIGN IS USED ON RENOVATION PROJECTS WHERE EXISITNG WALLS REQUIRE UPGRADE TO 15 MINUTE FE/BR PROTECTION

WARNING:
This document is the property of the U.S. Government. Further reproduction and/or distribution is prohibited without the express written permission of: Overseas Buildings Operations, U.S. Department of State, Washington, DC, 20522-0620. Information on this document is not to be altered except with the written approval of the individual whose seal appears hereon.

U.S. Department of State

Office of
Overseas Buildings Operations

15 MINUTE STL UPGRADE OF REINF CONC OR SOLID MASONRY WALL
GPK-15R-DOS-01

OBO/SEB Security Details

| | |
|---|---|
| DWG.TITLE: GPK-15R-DOS-01.dwg | |
| REV: | DATE: |
| REV: | DATE: |
| SCALE: 1:5 | SHEET: 1 OF 1 |
| DRAWN BY: | |
| DATE: January 2009 | UNCLASSIFIED |

MATERIAL SPECIFICATIONS
STEEL PLATE & ANGLES:
fy=250 MPa (MIN.)(36 KSI)

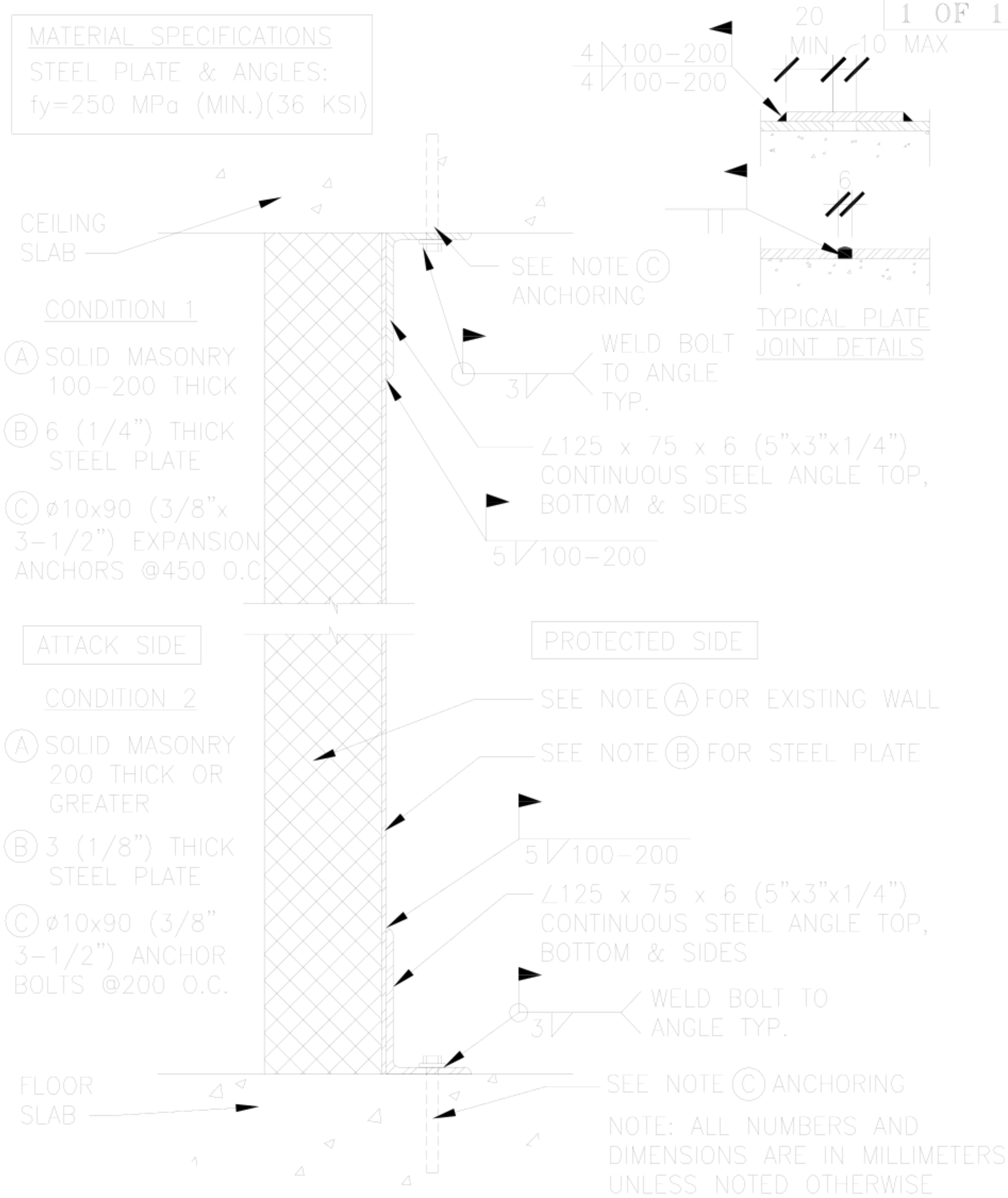


NOTE: ALL NUMBERS AND DIMENSIONS ARE IN MILLIMETERS UNLESS NOTED OTHERWISE

1 SECTION – UPGRADE 15 MINUTE WALL

SCALE: 1:5

NOTE: THIS DESIGN IS USED WHERE UPGRADE OF EXISTING SOLID MASONRY WALLS TO 15 MINUTE FE/BR CRITERIA IS REQUIRED

WARNING:
This document is the property of the U.S. Government. Further reproduction and/or distribution is prohibited without the express written permission of: Overseas Buildings Operations, U.S. Department of State, Washington, DC, 20522-0620. Information on this document is not to be altered except with the written approval of the individual whose seal appears hereon.

U.S. Department of State
Office of Overseas Buildings Operations

15 MINUTE FE/BR STL UPGRADE OF SOLID MASONRY WALL
GPK-15R-DOS-02

OBO/SEB Security Details

| | |
|---|---|
| DWG.TITLE: GPK-15R-DOS-02.dwg | |
| REV: | DATE: |
| REV: | DATE: |
| SCALE: 1:5 | SHEET: 1 OF 1 |
| DRAWN BY: | |
| DATE: January 2009 | UNCLASSIFIED |

MATERIAL SPECIFICATIONS

STEEL PLATE & ANGLES: fy=250 MPa MIN.
HIGH HARDNESS STEEL: ASTRAALLOY BP:33

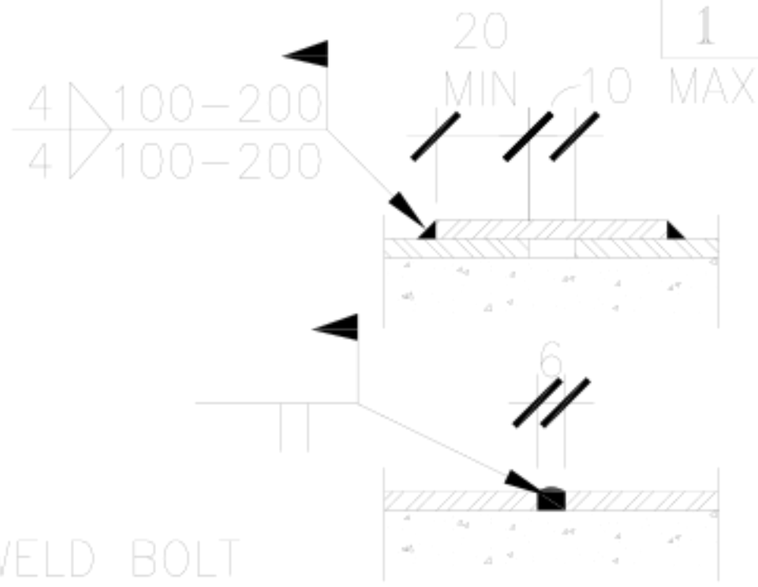


TYPICAL PLATE JOINT DETAILS

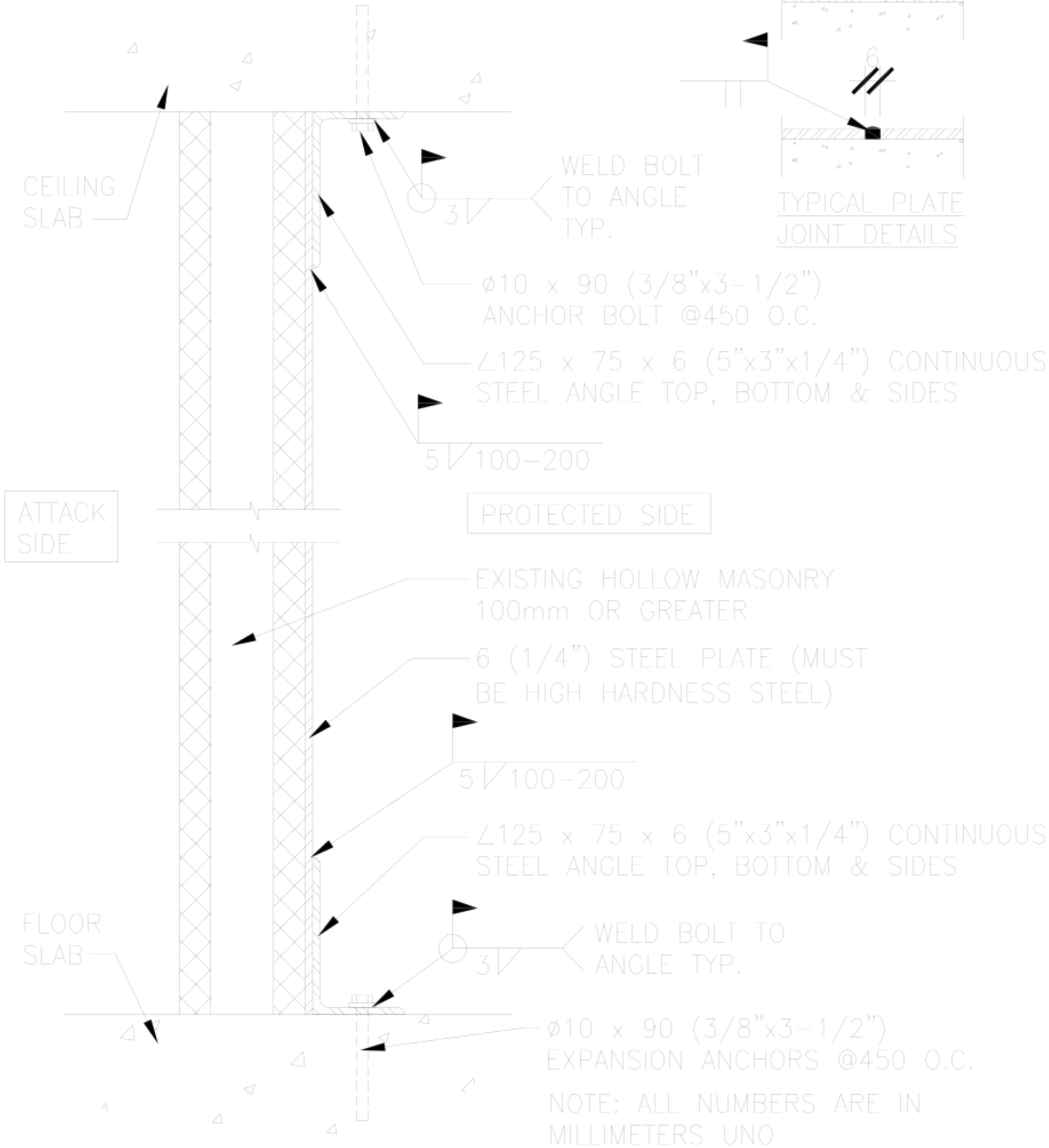


NOTE: ALL NUMBERS ARE IN MILLIMETERS UNO

## 1 SECTION – UPGRADE 15 MINUTE WALL

SCALE: 1:5

NOTE: THIS DESIGN IS USED WHERE UPGRADE OF EXISITNG HOLLOW MASONRY WALLS TO 15 MINUTE FE/BR CRITERIA IS REQUIRED

WARNING:
This document is the property of the U.S. Government. Further reproduction and/or distribution is prohibited without the express written permission of: Overseas Buildings Operations, U.S. Department of State, Washington, DC, 20522-0620. Information on this document is not to be altered except with the written approval of the individual whose seal appears hereon.

U.S. Department of State
Office of Overseas Buildings Operations

15 MINUTE FE/BR UPGRADE OF HOLLOW MASONRY WALL
GPK-15R-DOS-03

OBO/SEB Security Details

| | |
|---|---|
| DWG.TITLE: GPK-15R-DOS-03.dwg | |
| REV: | DATE: |
| REV: | DATE: |
| SCALE: 1:5 | SHEET: 1 OF 1 |
| DRAWN BY: | |
| DATE: January 2009 | UNCLASSIFIED |

MATERIAL SPECIFICATIONS

STEEL PLATE & ANGLES: fy=250 MPa MIN.
HIGH HARDNESS STEEL: ASTRAALLOY BP:33

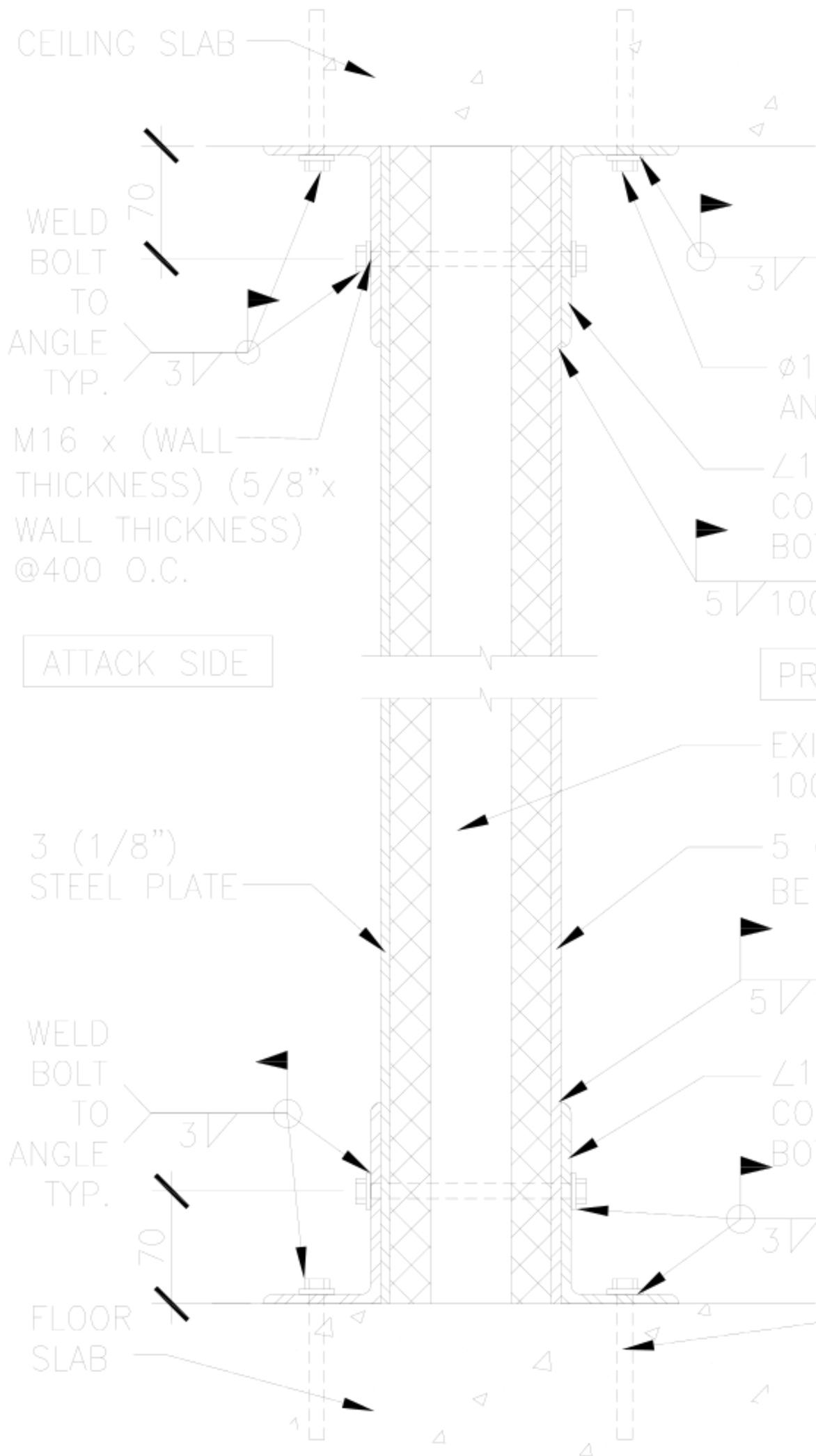


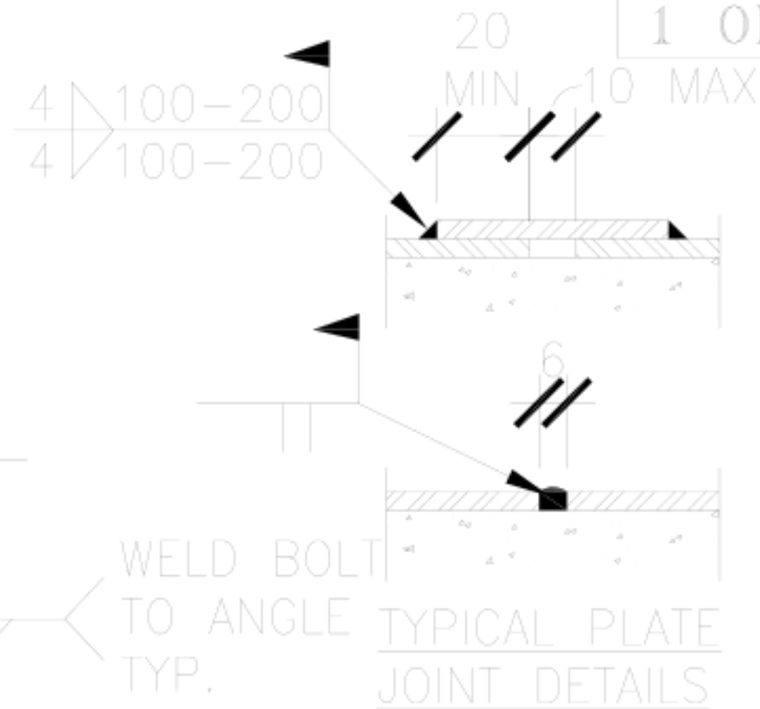


NOTE: ALL NUMBERS ARE IN MILLIMETERS

## 1 SECTION – UPGRADE 15 MINUTE WALL

SCALE: 1:5

NOTE: THIS DESIGN IS USED WHERE UPGRADE OF EXISITNG HOLLOW MASONRY WALLS TO 15 MINUTE FE/BR CRITERIA IS REQUIRED

WARNING:
This document is the property of the U.S. Government. Further reproduction and/or distribution is prohibited without the express written permission of: Overseas Buildings Operations, U.S. Department of State, Washington, DC, 20522-0620. Information on this document is not to be altered except with the written approval of the individual whose seal appears hereon.

U.S. Department of State
Office of Overseas Buildings Operations

15 MINUTE FE/BR TWO SIDED UPGRADE TO HOLLOW MASONRY WALL
GPK-15R-DOS-04

OBO/SEB Security Details

| | |
|---|---|
| DWG.TITLE: GPK-15R-DOS-04.dwg | |
| REV: | DATE: |
| REV: | DATE: |
| SCALE: 1:5 | SHEET: 1 OF 1 |
| DRAWN BY: | |
| DATE: January 2009 | UNCLASSIFIED |

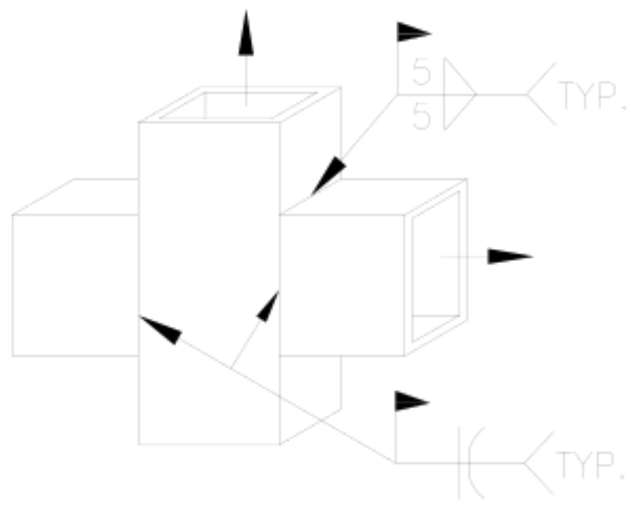


ISOMETRIC VIEW OF JOINT

A

SCALE: N.T.S.

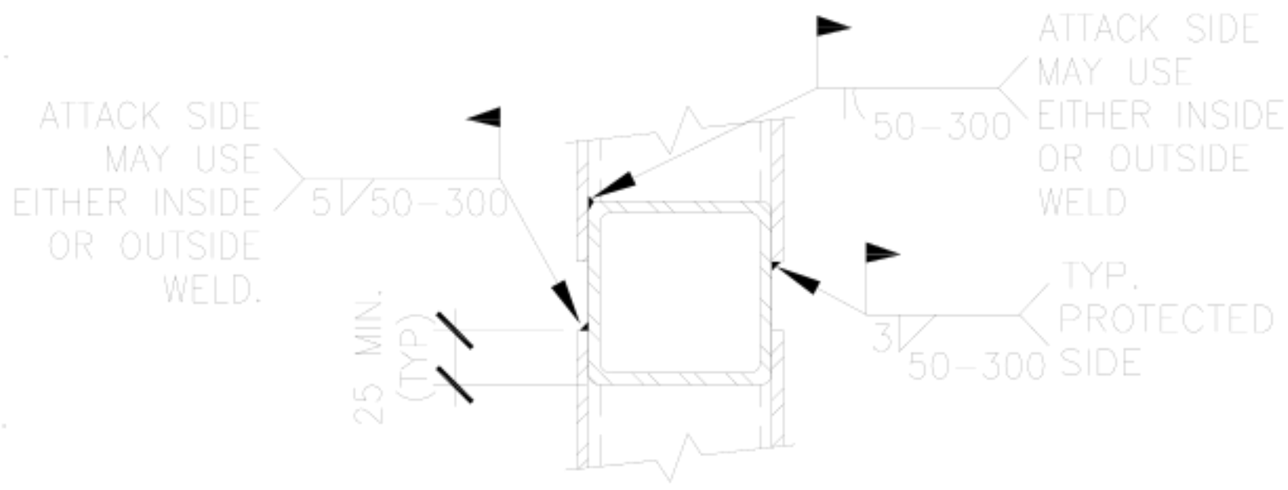


DETAIL AT EDGE OF PLATES

B

SCALE: N.T.S.

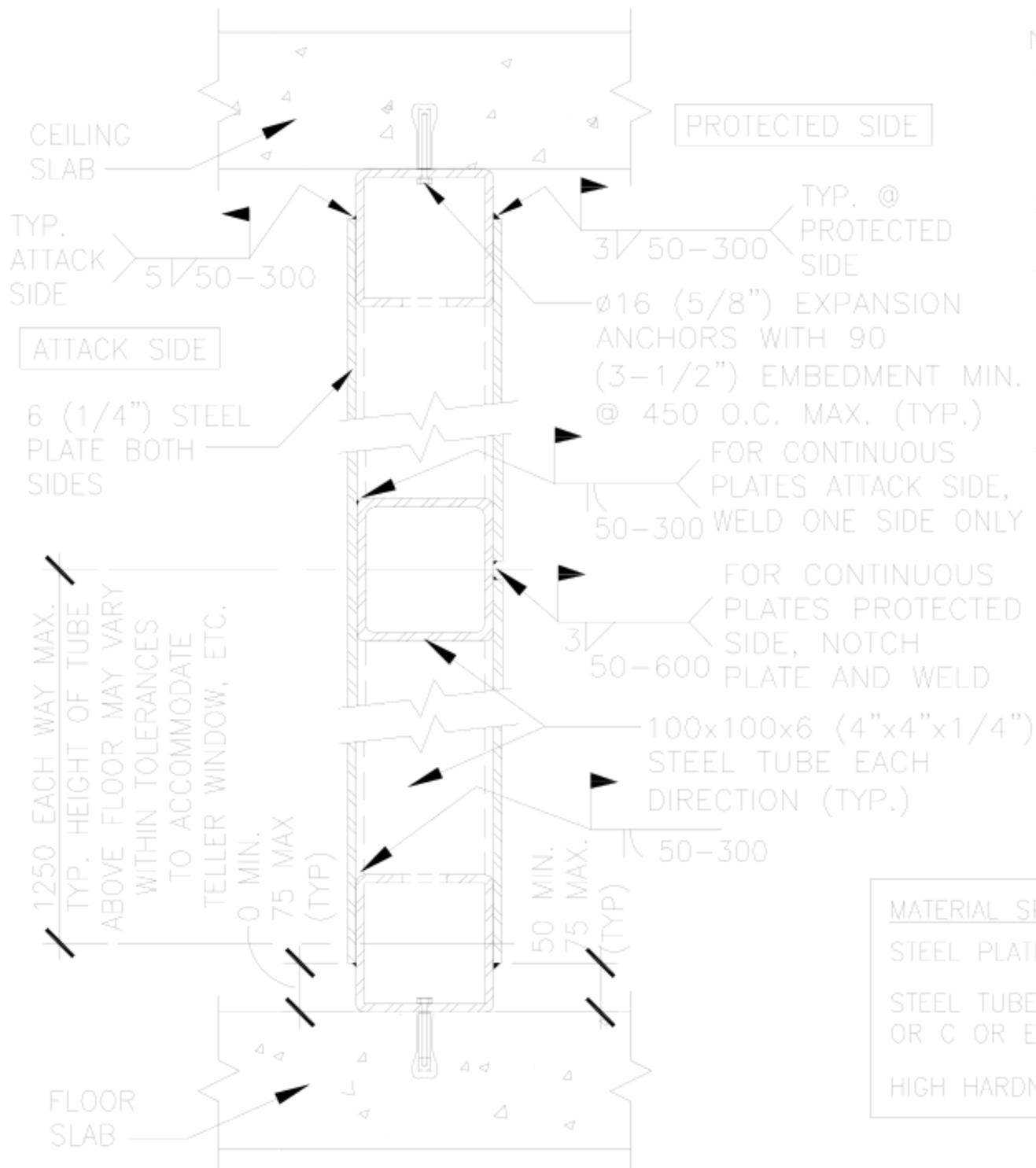


NOTES:

1. ANCHORAGE SHOWN IS FOR CONCRETE ONLY. FOR OTHER SUBSTRATES, REFER TO OBO/PE/DE/SEB FOR GUIDANCE.
2. ARCHITECTURAL FINISH NOT SHOWN.
3. WELDING PER AWS D1.1 FLARE-BEVEL-GROOVE WELDS SHALL HAVE JOINTS WELDED FLUSH. WELDING PROCEDURES AND SEQUENCING SHALL MINIMIZE DISTORTION.
4. ELECTRODES E7018. ELECTRODES SHALL BE PURCHASED IN HERMETICALLY SEALED CONTAINERS OR SHALL BE DRIED FOR AT LEAST 2 HOURS BETWEEN 230° C AND 260° C BEFORE THEY ARE USED.

MATERIAL SPECIFICATIONS

STEEL PLATE AND STEEL ANGLES: 250 MPa

STEEL TUBE: ASTM A500 GRADE B OR C OR EQUIVALENT fy=320 MPa

HIGH HARDNESS STEEL: ASTRALLOY BP 6:33

1

15 MINUTE FE/BR HARDLINE WALL

SCALE: N.T.S.

NOTE: THIS DETAIL IS USED FOR 15 MINUTE FE/BR PROTECTION IS REQUIRED.

WARNING:
This document is the property of the U.S. Government. Further reproduction and/or distribution is prohibited without the express written permission of: Overseas Buildings Operations, U.S. Department of State, Washington, DC, 20522-0620. Information on this document is not to be altered except with the written approval of the individual whose seal appears hereon.

U.S. Department of State

Office of Overseas Buildings Operations

15 MINUTE FE/BR HARDLINE WALL
DUAL STEEL PLATE
GPS-15R-DOS-01

OBO/SEB Security Details

| | |
|---|---|
| DWG.TITLE: GPS-15R-DOS-01.dwg | |
| REV: | DATE: |
| REV: | DATE: |
| SCALE: N.T.S. | SHEET: 1 OF 1 |
| DRAWN BY: | |
| DATE: January 2009 | UNCLASSIFIED |

NOTES:
1. ANCHORAGE SHOWN IS FOR CONCRETE ONLY. FOR OTHER SUBSTRATES, REFER TO OBO FOR GUIDANCE.
2. ARCHITECTURAL FINISH NOT SHOWN.

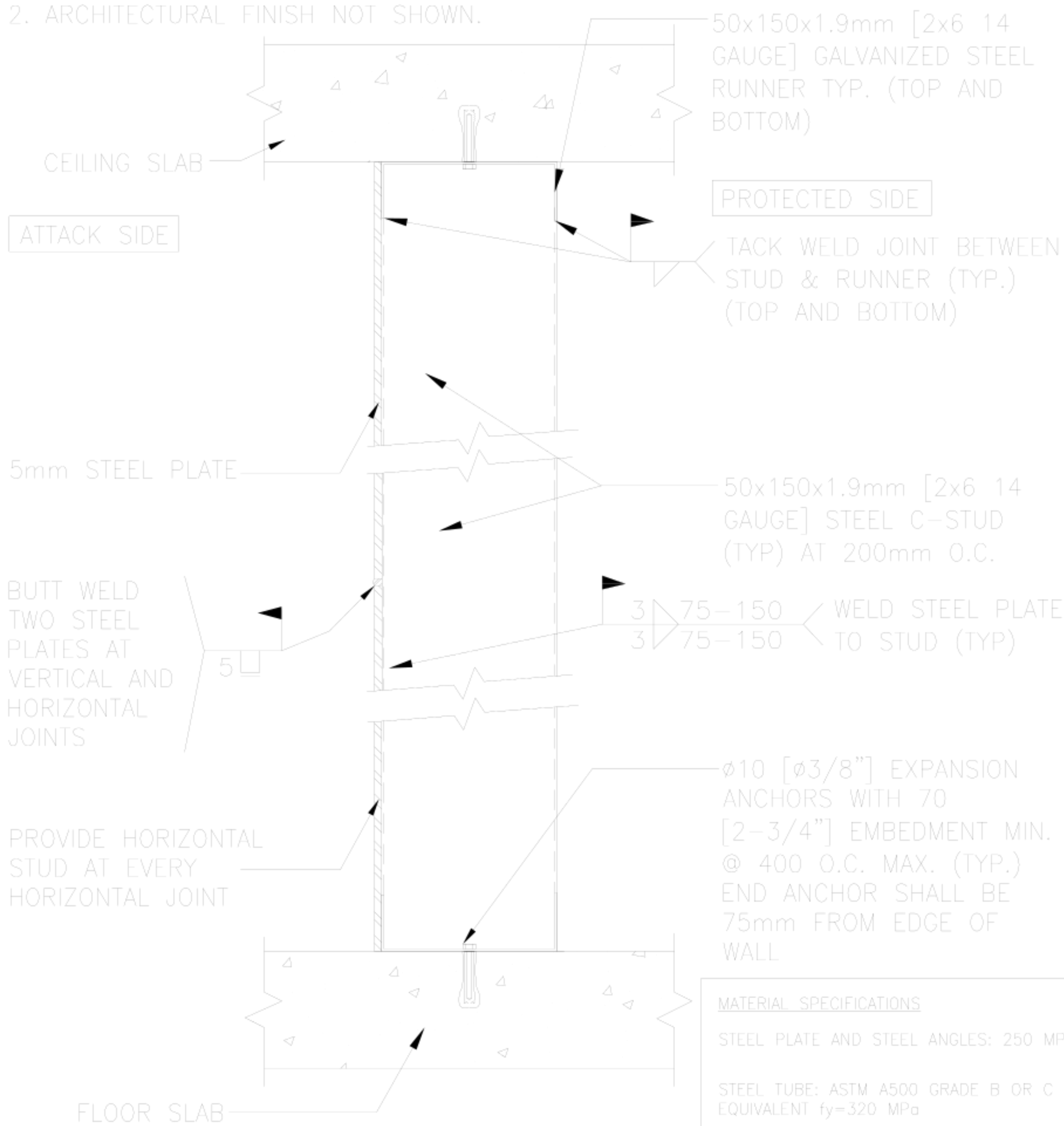


MATERIAL SPECIFICATIONS

STEEL PLATE AND STEEL ANGLES: 250 MPa

STEEL TUBE: ASTM A500 GRADE B OR C OR EQUIVALENT fy=320 MPa

HIGH HARDNESS STEEL: ASTRALLOY BP 6:33

NOTE: THIS DETAIL IS USED FOR 15 MINUTE FE ONLY HARDLINES IN AREAS WITH CONCRETE CONSTRUCTION.

## 1 15 MINUTE FE ONLY HARDLINE WALL

SCALE: N.T.S.

WARNING:
This document is the property of the U.S. Government. Further reproduction and/or distribution is prohibited without the express written permission of: Overseas Buildings Operations, U.S. Department of State, Washington, DC, 20522-0620. Information on this document is not to be altered except with the written approval of the individual whose seal appears hereon.

U.S. Department of State
Office of Overseas Buildings Operations

15 MINUTE FE WALL
STEEL PLATE AND STEEL PLATE WALL GPS-15N-DOS-02

OBO/SEB Security Details

| | |
|---|---|
| DWG.TITLE: GPS-15N-DOS-02.dwg | |
| REV: | DATE: |
| REV: | DATE: |
| SCALE: N.T.S. | SHEET: 1 OF 1 |
| DRAWN BY: | |
| DATE: January 2009 | UNCLASSIFIED |

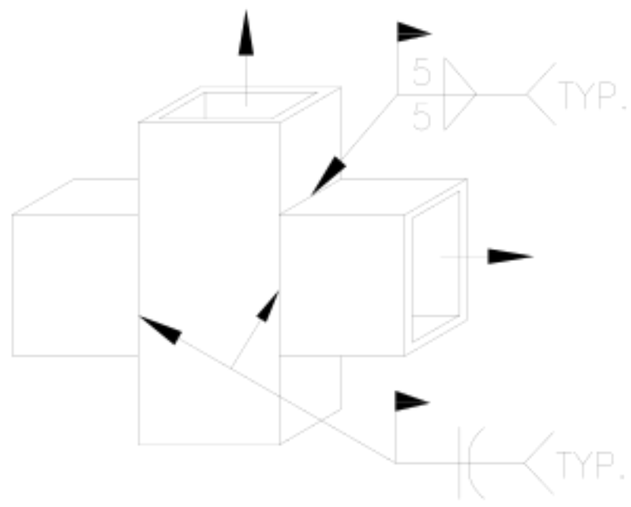


ISOMETRIC VIEW OF JOINT

A

SCALE: N.T.S.

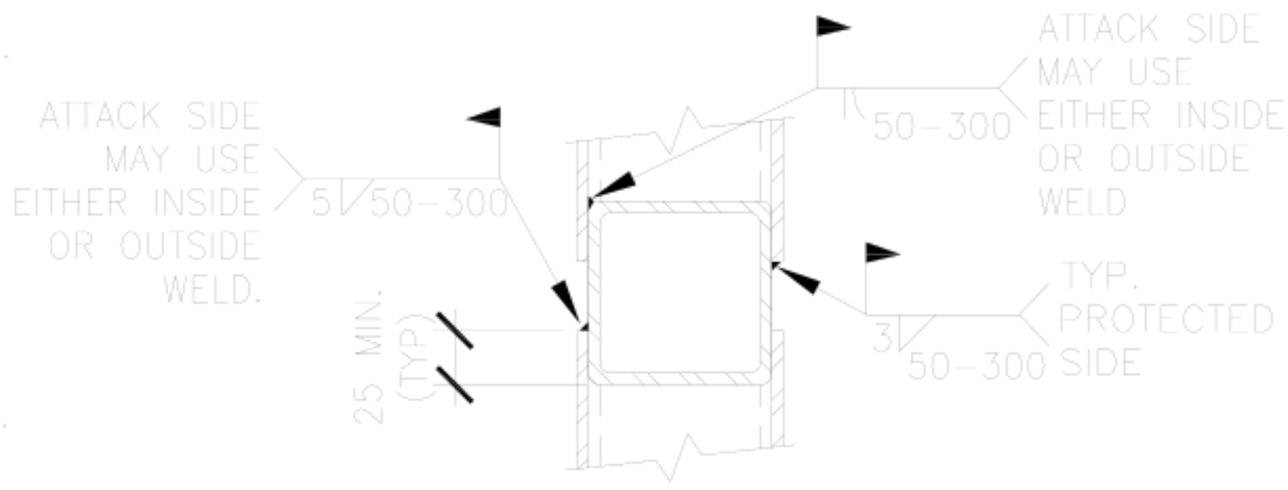


DETAIL AT EDGE OF PLATES

B

SCALE: N.T.S.

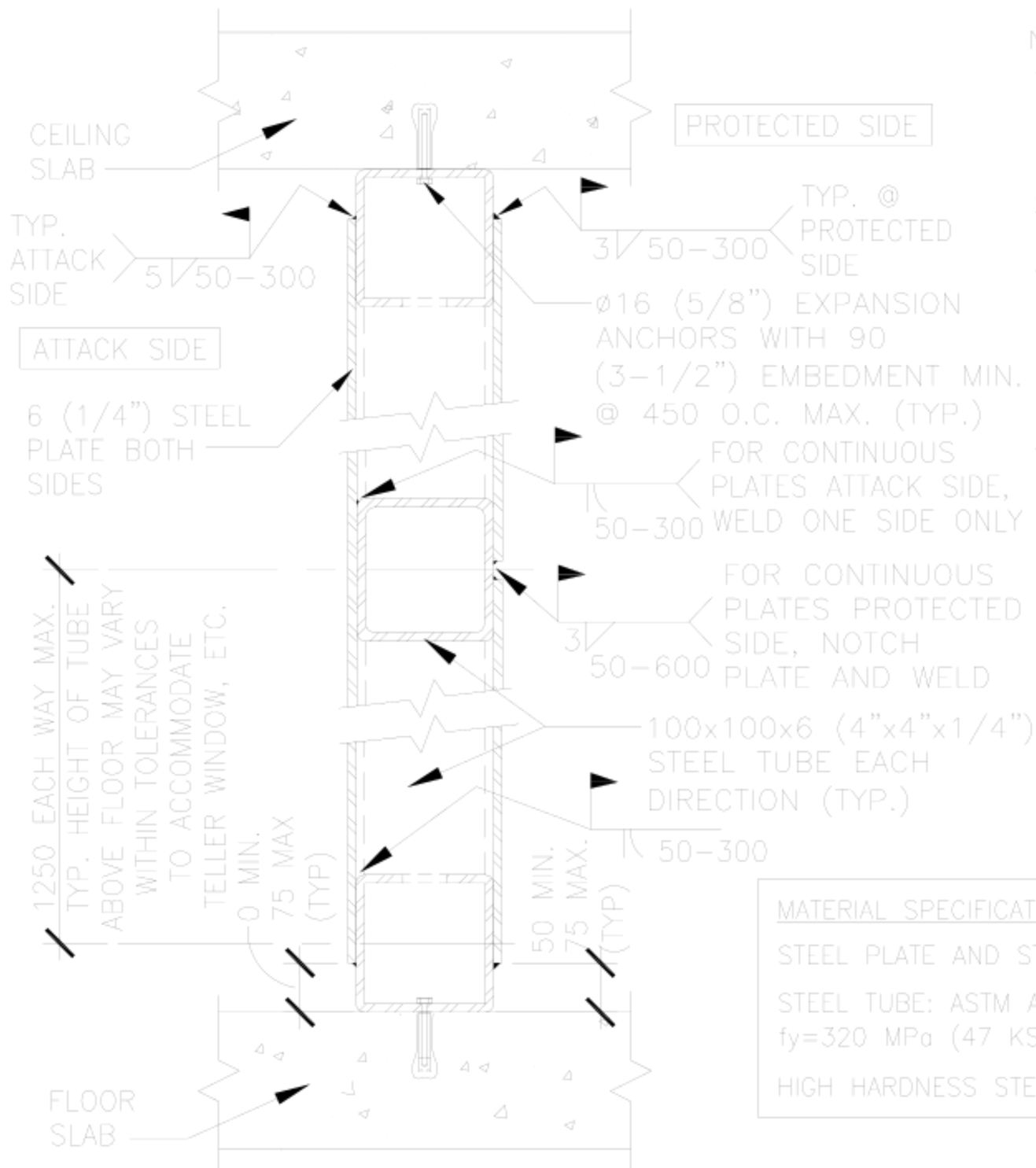


NOTES:

1. ANCHORAGE SHOWN IS FOR CONCRETE ONLY. FOR OTHER SUBSTRATES, REFER TO OBO/PE/DE/SEB FOR GUIDANCE.
2. ARCHITECTURAL FINISH NOT SHOWN.
3. WELDING PER AWS D1.1 FLARE-BEVEL-GROOVE WELDS SHALL HAVE JOINTS WELDED FLUSH. WELDING PROCEDURES AND SEQUENCING SHALL MINIMIZE DISTORTION.
4. ELECTRODES E7018. ELECTRODES SHALL BE PURCHASED IN HERMETICALLY SEALED CONTAINERS OR SHALL BE DRIED FOR AT LEAST 2 HOURS BETWEEN 230° C AND 260° C BEFORE THEY ARE USED.

MATERIAL SPECIFICATIONS

STEEL PLATE AND STEEL ANGLES: 250 MPa (36 KSI)

STEEL TUBE: ASTM A500 GRADE B OR C OR EQUIVALENT fy=320 MPa (47 KSI)

HIGH HARDNESS STEEL: ASTRALLOY BP 6:33

1

15 MINUTE FE/BR HARDLINE WALL

SCALE: N.T.S.

NOTE: THIS DETAIL IS USED FOR 15 MINUTE FE/BR HARDLINES IN AREAS WITH CONCRETE CONSTRUCTION. OPTION: INSTEAD OF TWO 6mm THICK STEEL PLATES, HIGH HARDNESS STEEL MAY BE USED WITH 6mm (1/4") ON THE ATTACK SIDE AND 3mm (1/8") ON THE PROTECTED SIDE.

WARNING:
This document is the property of the U.S. Government. Further reproduction and/or distribution is prohibited without the express written permission of: Overseas Buildings Operations, U.S. Department of State, Washington, DC, 20522-0620. Information on this document is not to be altered except with the written approval of the individual whose seal appears hereon.

U.S. Department of State

Office of Overseas Buildings Operations

15 MINUTE FE/BR HARDLINE WALL
ALTERNATE DUAL STEEL PLATE
GPS-15R-DOS-02

OBO/SEB Security Details

| | |
|---|---|
| DWG.TITLE: GPS-15R-DOS-02.dwg | |
| REV: | DATE: |
| REV: | DATE: |
| SCALE: N.T.S. | SHEET: 1 OF 1 |
| DRAWN BY: | |
| DATE: January 2009 | UNCLASSIFIED |

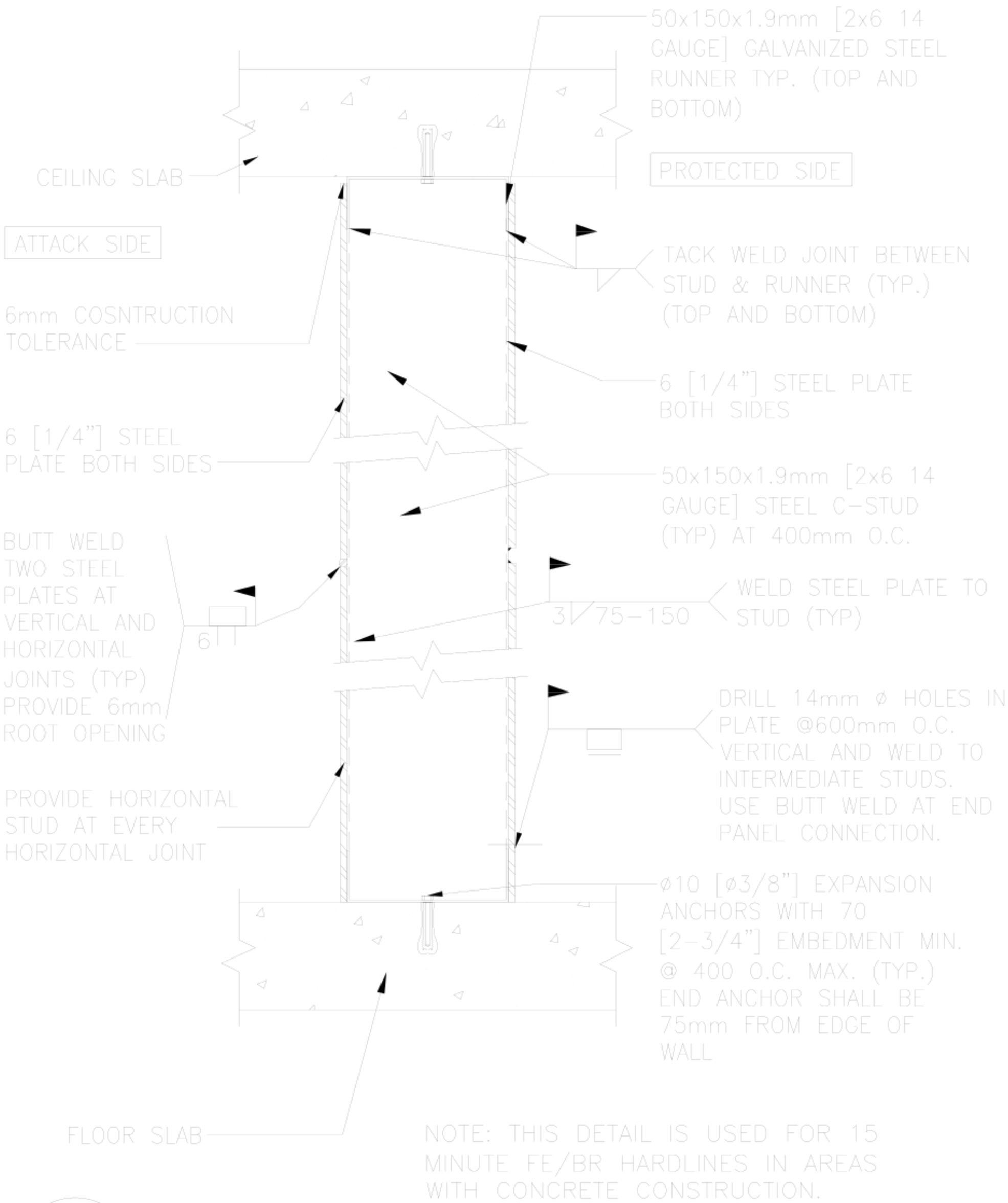


NOTE: THIS DETAIL IS USED FOR 15 MINUTE FE/BR HARDLINES IN AREAS WITH CONCRETE CONSTRUCTION.

## 1 15 MINUTE FE/BR HARDLINE WALL

SCALE: N.T.S.

WARNING:
This document is the property of the U.S. Government. Further reproduction and/or distribution is prohibited without the express written permission of: Overseas Buildings Operations, U.S. Department of State, Washington, DC, 20522-0620. Information on this document is not to be altered except with the written approval of the individual whose seal appears hereon.

U.S. Department of State
Office of Overseas Buildings Operations

15 MINUTE FE/BR HARDLINE WALL
GPS-15R-DOS-02A
MODIFIED GPS-15R-DOS-02

OBO/SEB Security Details

| | |
|---|---|
| DWG.TITLE: GPS-15R-DOS-02A.dwg | |
| REV: | DATE: |
| REV: | DATE: |
| SCALE: N.T.S. | SHEET: 1 OF 3 |
| DRAWN BY: | |
| DATE: January 2009 | UNCLASSIFIED |

NOTES:
1. ANCHORAGE SHOWN IS FOR CONCRETE ONLY. FOR OTHER SUBSTRATES, REFER TO OBO FOR GUIDANCE.
2. ARCHITECTURAL FINISH NOT SHOWN.

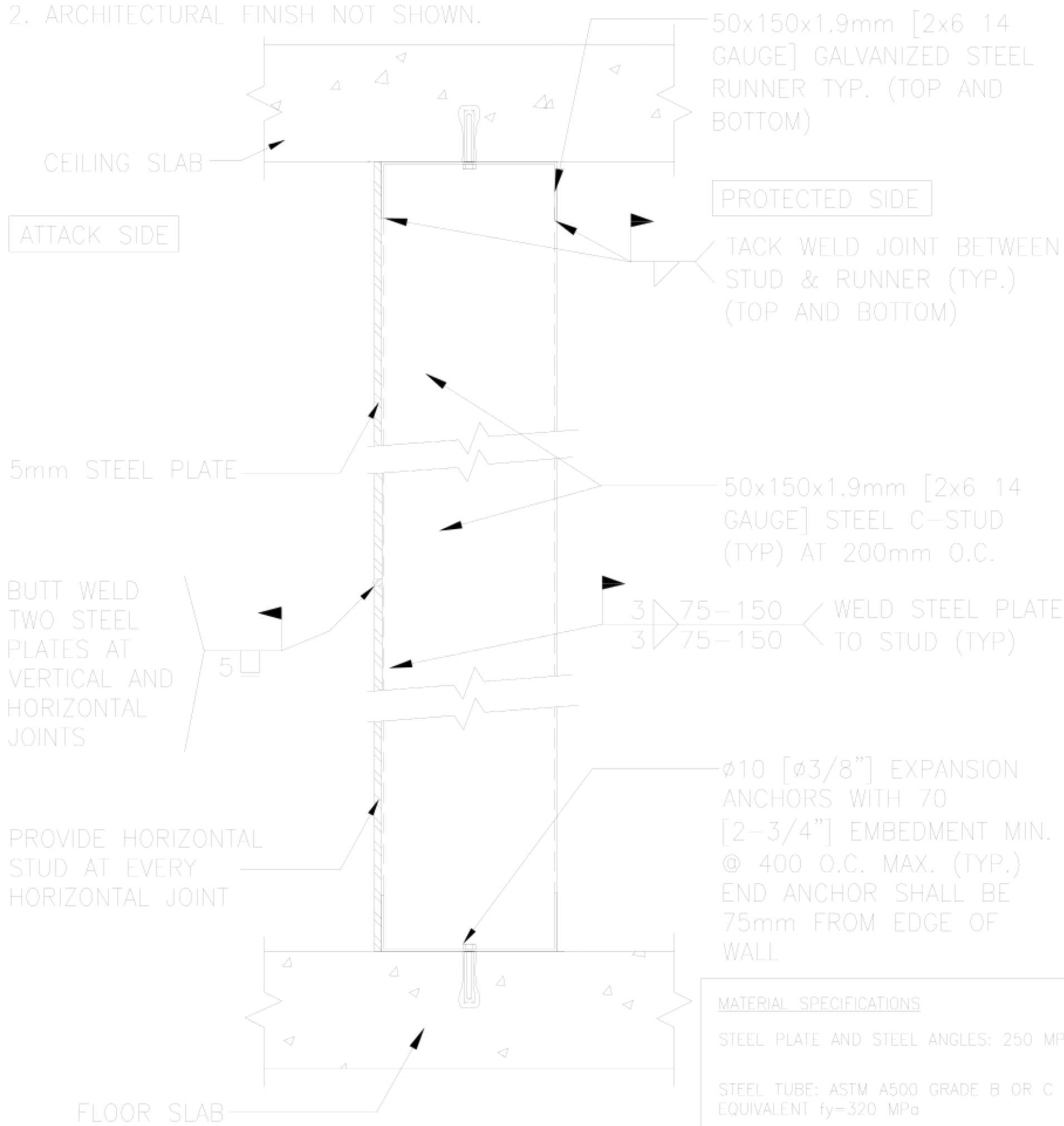


MATERIAL SPECIFICATIONS

STEEL PLATE AND STEEL ANGLES: 250 MPa

STEEL TUBE: ASTM A500 GRADE B OR C OR EQUIVALENT fy=320 MPa

HIGH HARDNESS STEEL: ASTRALLOY BP 6:33

NOTE: THIS DETAIL IS USED FOR 15 MINUTE FE ONLY HARDLINES IN AREAS WITH CONCRETE CONSTRUCTION.

## 1 15 MINUTE FE ONLY HARDLINE WALL

SCALE: N.T.S.

WARNING:
This document is the property of the U.S. Government. Further reproduction and/or distribution is prohibited without the express written permission of: Overseas Buildings Operations, U.S. Department of State, Washington, DC, 20522-0620. Information on this document is not to be altered except with the written approval of the individual whose seal appears hereon.

U.S. Department of State
Office of Overseas Buildings Operations

15 MINUTE FE WALL
STEEL PLATE AND STEEL PLATE WALL GPS-15N-DOS-02

OBO/SEB Security Details

| | |
|---|---|
| DWG.TITLE: GPS-15N-DOS-02.dwg | |
| REV: | DATE: |
| REV: | DATE: |
| SCALE: N.T.S. | SHEET: 1 OF 1 |
| DRAWN BY: | |
| DATE: January 2009 | UNCLASSIFIED |

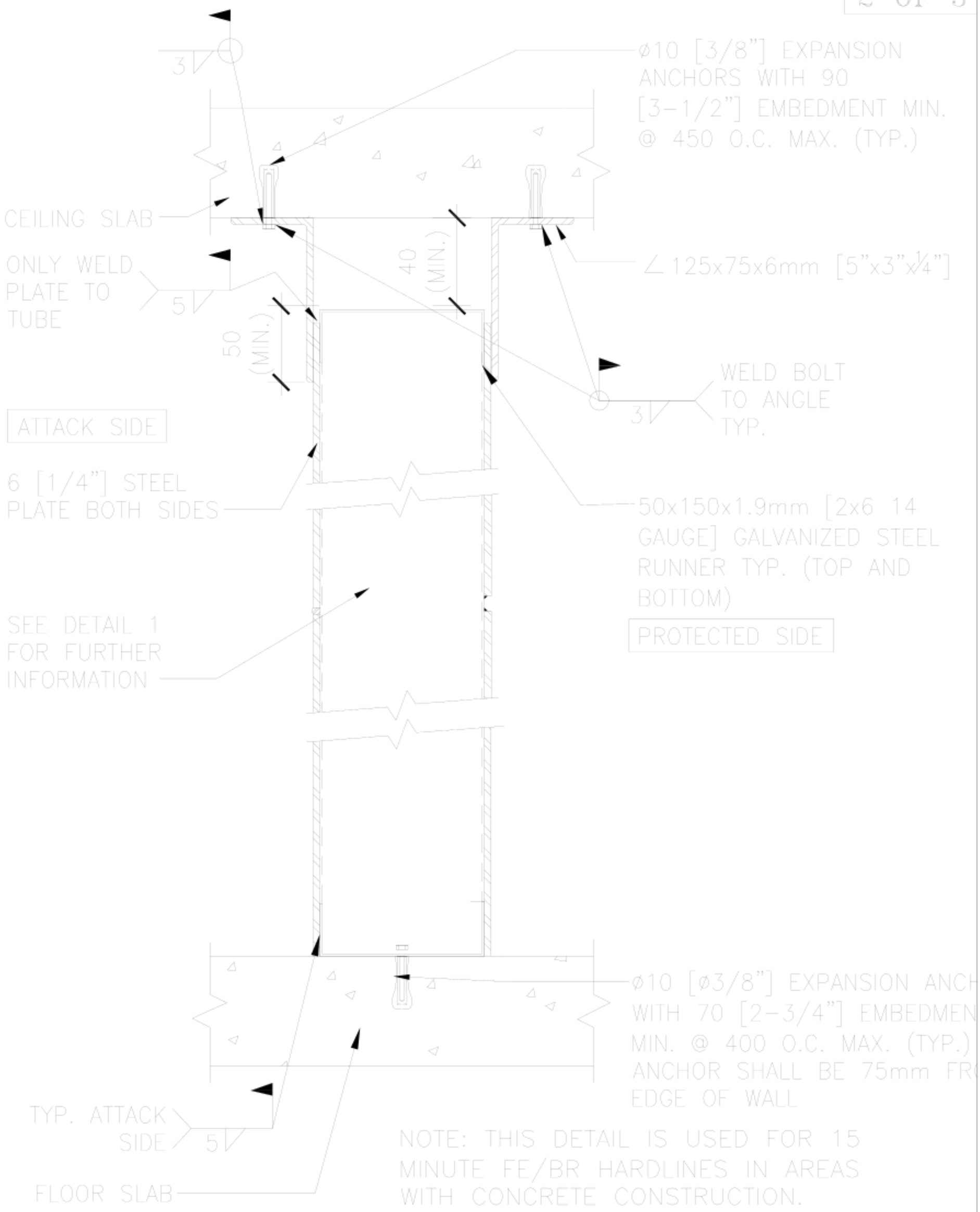


NOTE: THIS DETAIL IS USED FOR 15 MINUTE FE/BR HARDLINES IN AREAS WITH CONCRETE CONSTRUCTION.

## 2 15 MINUTE FE/BR HARDLINE WALL

SCALE: N.T.S.

WARNING:
This document is the property of the U.S. Government. Further reproduction and/or distribution is prohibited without the express written permission of: Overseas Buildings Operations, U.S. Department of State, Washington, DC, 20522-0620. Information on this document is not to be altered except with the written approval of the individual whose seal appears hereon.

U.S. Department of State

Office of Overseas Buildings Operations

15 MINUTE FE/BR HARDLINE WALL
GPS-15R-DOS-02A
MODIFIED GPS-15R-DOS-02

OBO/SEB Security Details

| | |
|---|---|
| DWG.TITLE: GPS-15R-DOS-02A.dwg | |
| REV: | DATE: |
| REV: | DATE: |
| SCALE: N.T.S. | SHEET: 2 OF 3 |
| DRAWN BY: | |
| DATE: January 2009 | UNCLASSIFIED |

MATERIAL SPECIFICATIONS

STEEL PLATE AND STEEL ANGLES: 250 MPa (36 KSI)

STEEL TUBE: ASTM A500 GRADE B OR C OR EQUIVALENT fy=320 MPa (47 KSI)

HIGH HARDNESS STEEL: ASTRALLOY BP 6:33

OPTION: INSTEAD OF TWO 6mm THICK STEEL PLATES, HIGH HARDNESS STEEL MAY BE USED WITH 6mm [1/4"] ON THE ATTACK SIDE AND 3mm [1/8"] ON THE PROTECTED SIDE.

NOTES:

1. ANCHORAGE SHOWN IS FOR CONCRETE ONLY. FOR OTHER SUBSTRATES, REFER TO OBO FOR GUIDANCE.
2. ARCHITECTURAL FINISH NOT SHOWN.

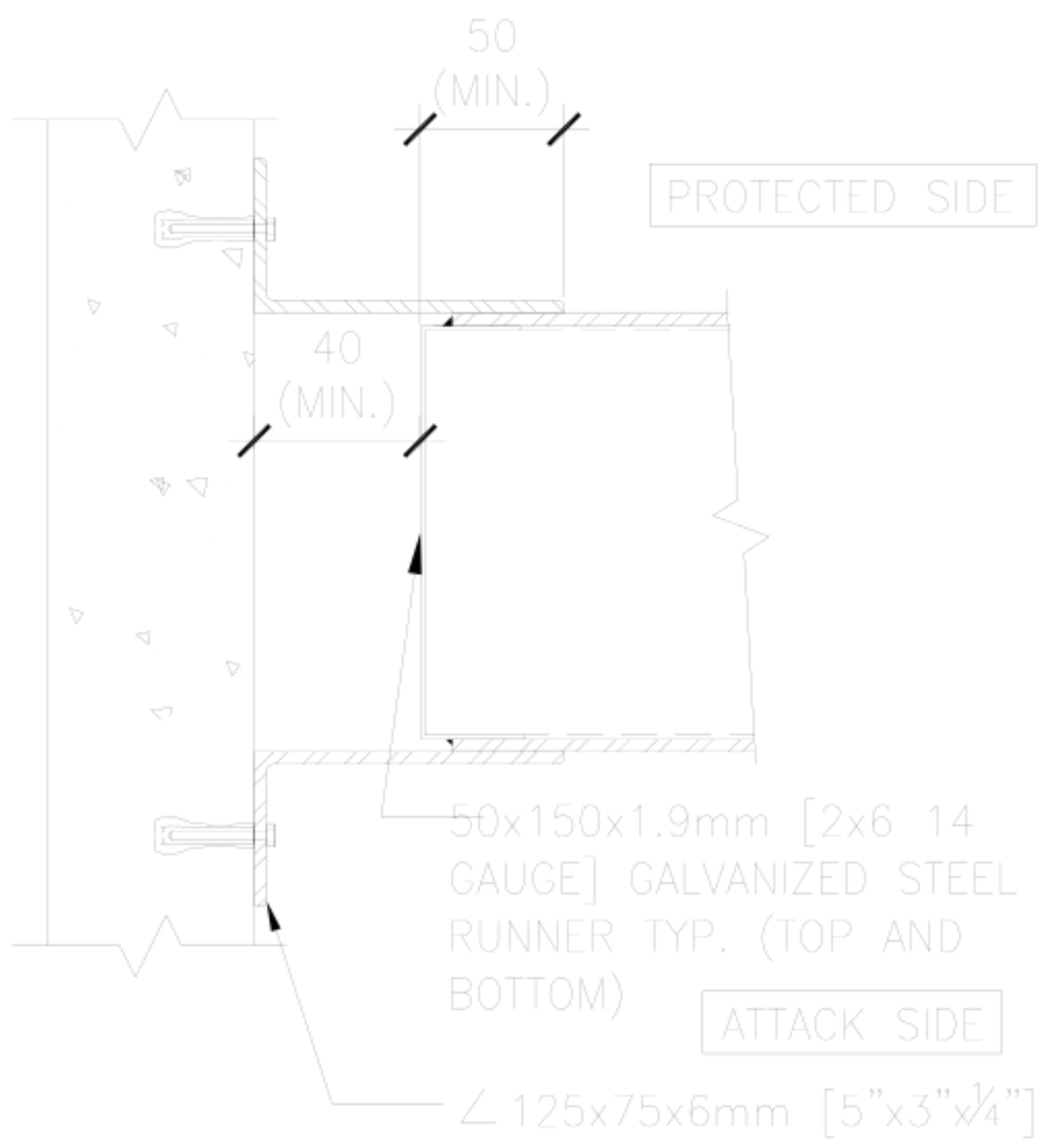


A

DETAIL AT CONNECTION TO WALL

SCALE: N.T.S.

WARNING:
This document is the property of the U.S. Government. Further reproduction and/or distribution is prohibited without the express written permission of: Overseas Buildings Operations, U.S. Department of State, Washington, DC, 20522-0620. Information on this document is not to be altered except with the written approval of the individual whose seal appears hereon.

U.S. Department of State

Office of Overseas Buildings Operations

15 MINUTE FE/BR HARDLINE WALL
GPS-15R-DOS-02A
MODIFIED GPS-15R-DOS-02

OBO/SEB Security Details

| | |
|---|---|
| DWG.TITLE: GPS-15R-DOS-02A.dwg | |
| REV: | DATE: |
| REV: | DATE: |
| SCALE: N.T.S. | SHEET: 3 OF 3 |
| DRAWN BY: | |
| DATE: January 2009 | UNCLASSIFIED |

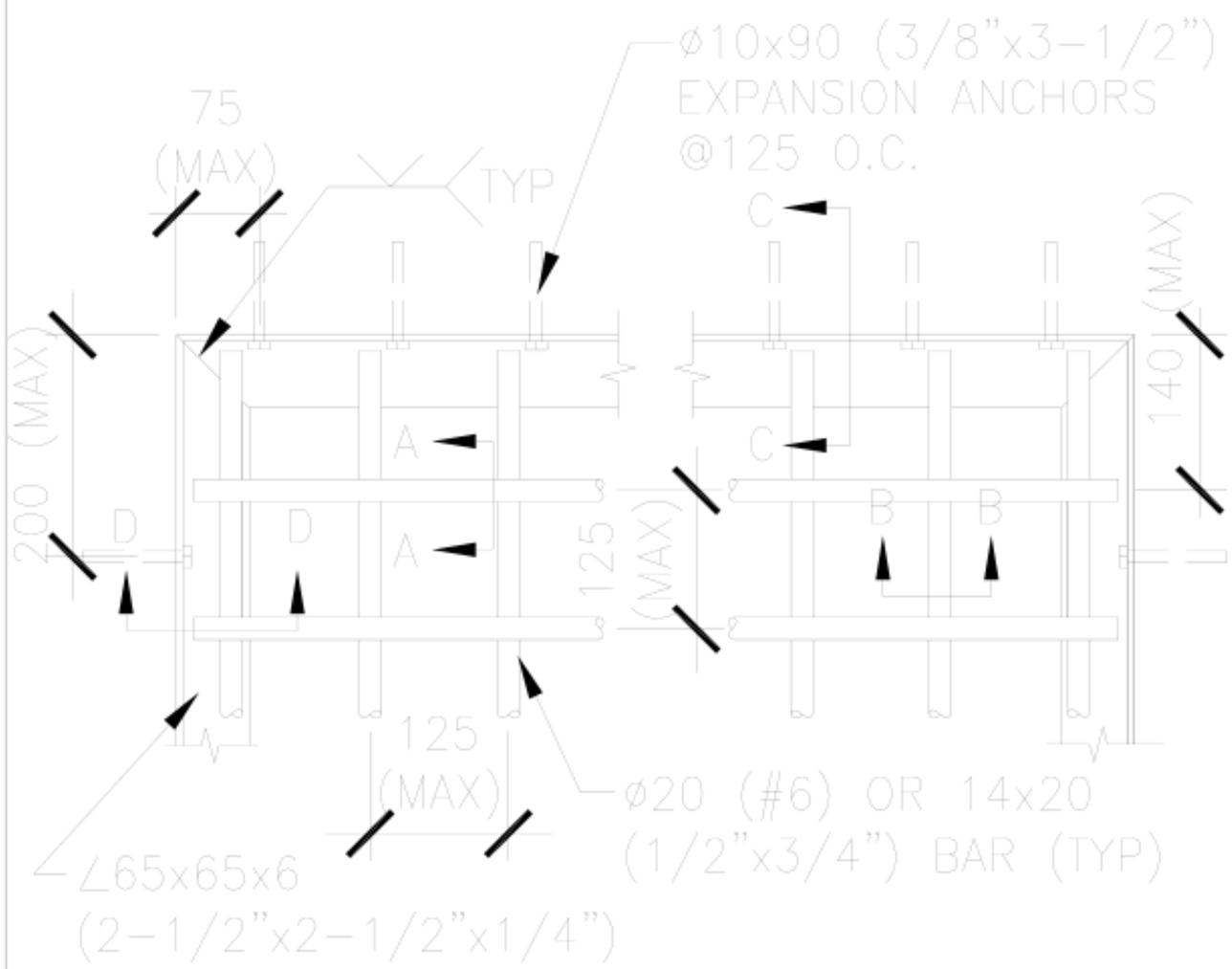


MATERIAL SPECIFICATIONS:
ANGLES:
fy=250 MPa MIN.
REINFORCING BARS:
fy=400 MPa MIN.
SQUARE BARS:
fy=250 MPa MIN.

ANCHORING SPECIFICATIONS:
CONCRETE: M10x90 (3/8"x3-1/2")(MIN) DROP-IN EXPANSION ANCHORS @125 O.C. (MAX). ANCHOR/BOLT HEADS SHOULD BE WELDED TO THE FRAME
STEEL: M10x1.5x25 (3/8"-16NC x 1") SOCKET HEAD CAP SCREWS @125 O.C. ANCHOR/BOLT HEADS SHOULD BE WELDED TO THE FRAME
MASONRY: M10x150 (3/8"x6")(MIN) HILTI C-20 OR EQUIVALENT @250 O.C. ANCHOR/BOLT HEADS SHOULD BE WELDED TO THE FRAME

ALL DIMENSIONS ARE IN MM. ACCEPTABLE IP SIZES IN ( ).

SPACING & TYPE OF ANCHORS SHOWN ARE FOR CONCRETE ONLY. ANCHORAGE TO OTHER SUBSTRATE CONDITIONS SHOULD BE COORDINATED THROUGH OBO.

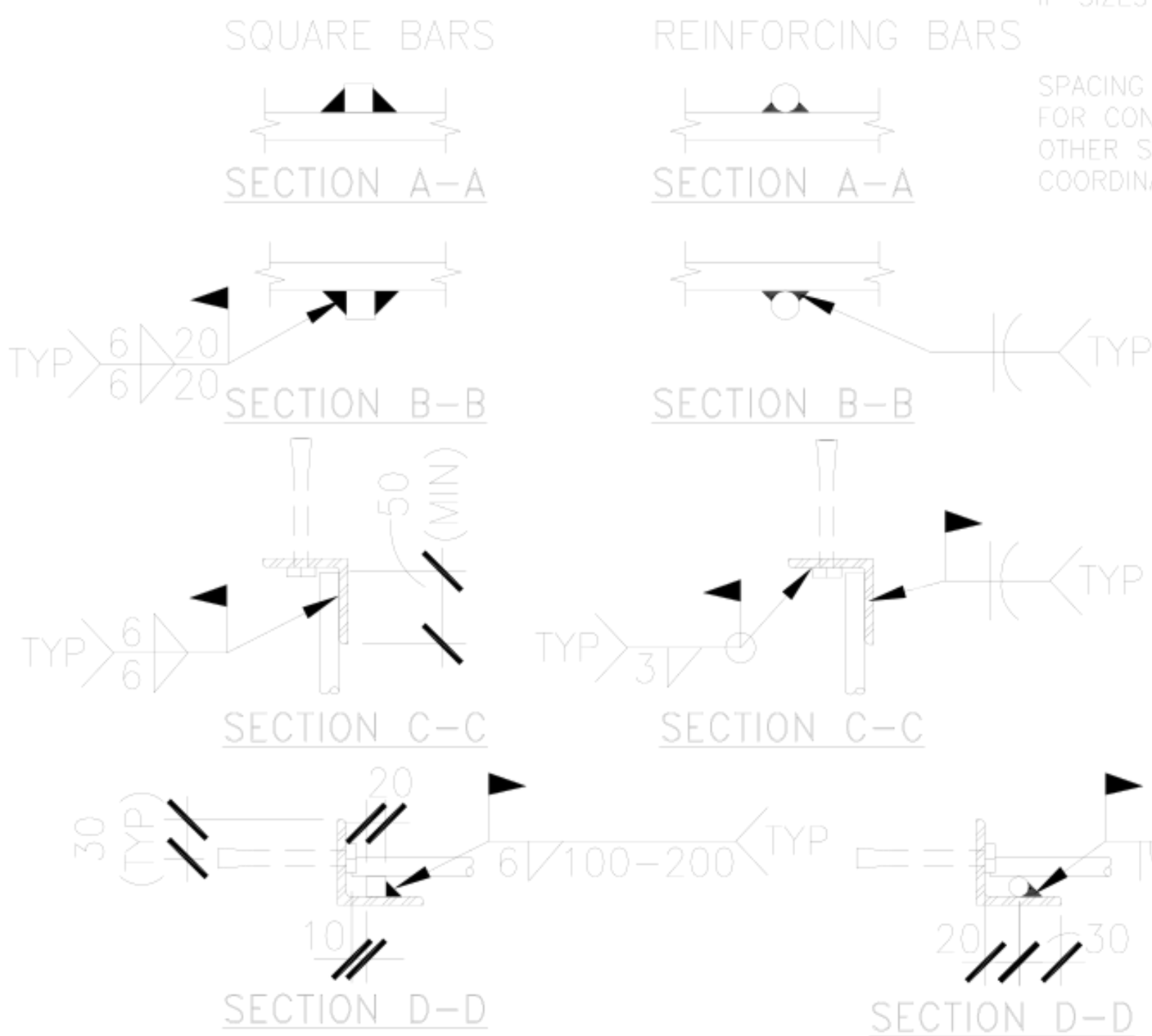


## 1 ELEVATION-15 MINUTE FE GRILLE

SCALE: N.T.S.

NOTE: THESE GRILLES ARE USED AT WINDOW OPENINGS, DUCT PENETRATIONS AND OTHER OPENINGS REQUIRING 15 MINUTE FE PROTECTION

WARNING:
This document is the property of the U.S. Government. Further reproduction and/or distribution is prohibited without the express written permission of: Overseas Buildings Operations, U.S. Department of State, Washington, DC, 20522-0620. Information on this document is not to be altered except with the written approval of the individual whose seal appears hereon.

U.S. Department of State
Office of Overseas Buildings Operations

# INTERIM 15 MINUTE FE GRILLE (JAMB MOUNT) XGW-15N-DOS-01

OBO/SEB Security Details

| | |
|---|---|
| DWG.TITLE: XGW-15N-DOS-01.dwg | |
| REV: | DATE: |
| REV: | DATE: |
| SCALE: 1:10 | SHEET: 1 OF 1 |
| DRAWN BY: | |
| DATE: January 2009 | UNCLASSIFIED |

ALL DIMENSIONS ARE IN MM.
ACCEPTABLE IP SIZES IN ( ).

MATERIAL SPECIFICATIONS:
ANGLES:
fy=250 MPa (36 KSI) MIN.
STEEL PLATE:
fy=250 MPa (36 KSI) MIN.

ø20 (#6) AT 125 O.C. INTEGRAL PART OF WALL CONSTRUCTION, TACK WELD AT ALL INTERSEC.

6 (¼") STEEL PLATE DUCT. INSIDE DIMS. TO BE SAME AS S.M. DUCT, CONTINUOUSLY WELD AT ALL JOINTS

DRILL IN EXPANSION ROD COUPLING (TYP), ø16 (⅝") HANGER ROD (MIN)

SHEET METAL DUCT, ATTACH TO STEEL PLATE AS PER SMACNA TYPICAL.

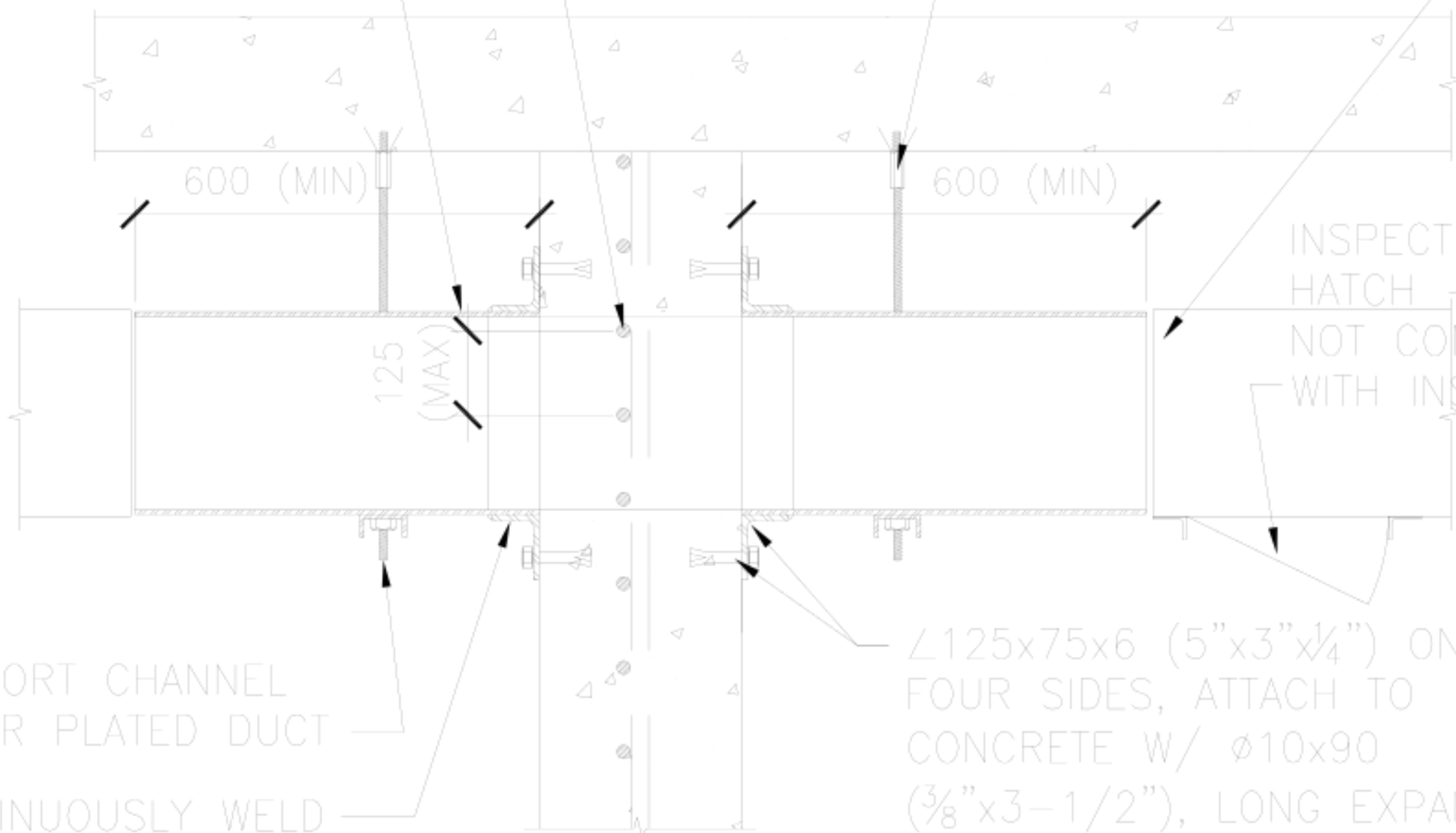


INSPECTION HATCH – DO NOT CONCEAL WITH INSULATION

SUPPORT CHANNEL UNDER PLATED DUCT

CONTINUOUSLY WELD PLATE TO STEEL ANGLE (TYP)

ATTACK SIDE

∠125x75x6 (5"x3"x¼") ON ALL FOUR SIDES, ATTACH TO CONCRETE W/ ø10x90 (⅜"x3-1/2"), LONG EXPANSION BOLTS @ 125 O.C.
MAY SUBSTITUTE ø16x90 (⅝"x3-12/") AT STEEL DUCT EXTENSIONS ONLY.

PROTECTED SIDE

## 1 SECTION: 15 MINUTE FE DUCT PENETRATION

SCALE: 1:15

NOTE: THIS DUCT PENETRATION MUST BE CONCEALED ABOVE A FINISHED CEILING AND TRANSIT WALL HORIZONTALLY (DOES NOT APPLY TO VERTICAL PENETRATIONS). DUCT PENETRATION USES REBAR WITHIN WALL.

WARNING:
This document is the property of the U.S. Government. Further reproduction and/or distribution is prohibited without the express written permission of: Overseas Buildings Operations, U.S. Department of State, Washington, DC, 20522-0620. Information on this document is not to be altered except with the written approval of the individual whose seal appears hereon.

U.S. Department of State
Office of Overseas Buildings Operations

INTERIM 15 MINUTE FE DUCT PENETRATION USING REBAR IN WALL
XGX-15N-DOS-01

OBO/SEB Security Details

| | |
|---|---|
| DWG.TITLE: XGX-15N-DOS-01.dwg | |
| REV: | DATE: |
| REV: | DATE: |
| SCALE: 1:15 | SHEET: 1 OF 4 |
| DRAWN BY: | |
| DATE: January 2012 | UNCLASSIFIED |

ALL DIMENSIONS ARE IN MM. ACCEPTABLE IP SIZES IN ( ).

MATERIAL SPECIFICATIONS:
ANGLES:
fy=250 MPa (36 KSI) MIN.
STEEL PLATE:
fy=250 MPa (36 KSI) MIN.

6 (¼") STEEL PLATE DUCT. INSIDE DIMENSIONS TO BE SAME AS SHEET METAL DUCT, CONTINUOUSLY WELD AT ALL JOINTS

DRILL IN EXPANSION ROD COUPLING (TYP), WITH ø16 (⅝") (MIN) HANGER ROD

ATTACH SHEET METAL DUCT TO STEEL PLATE PRE SMACNA, TYPICAL

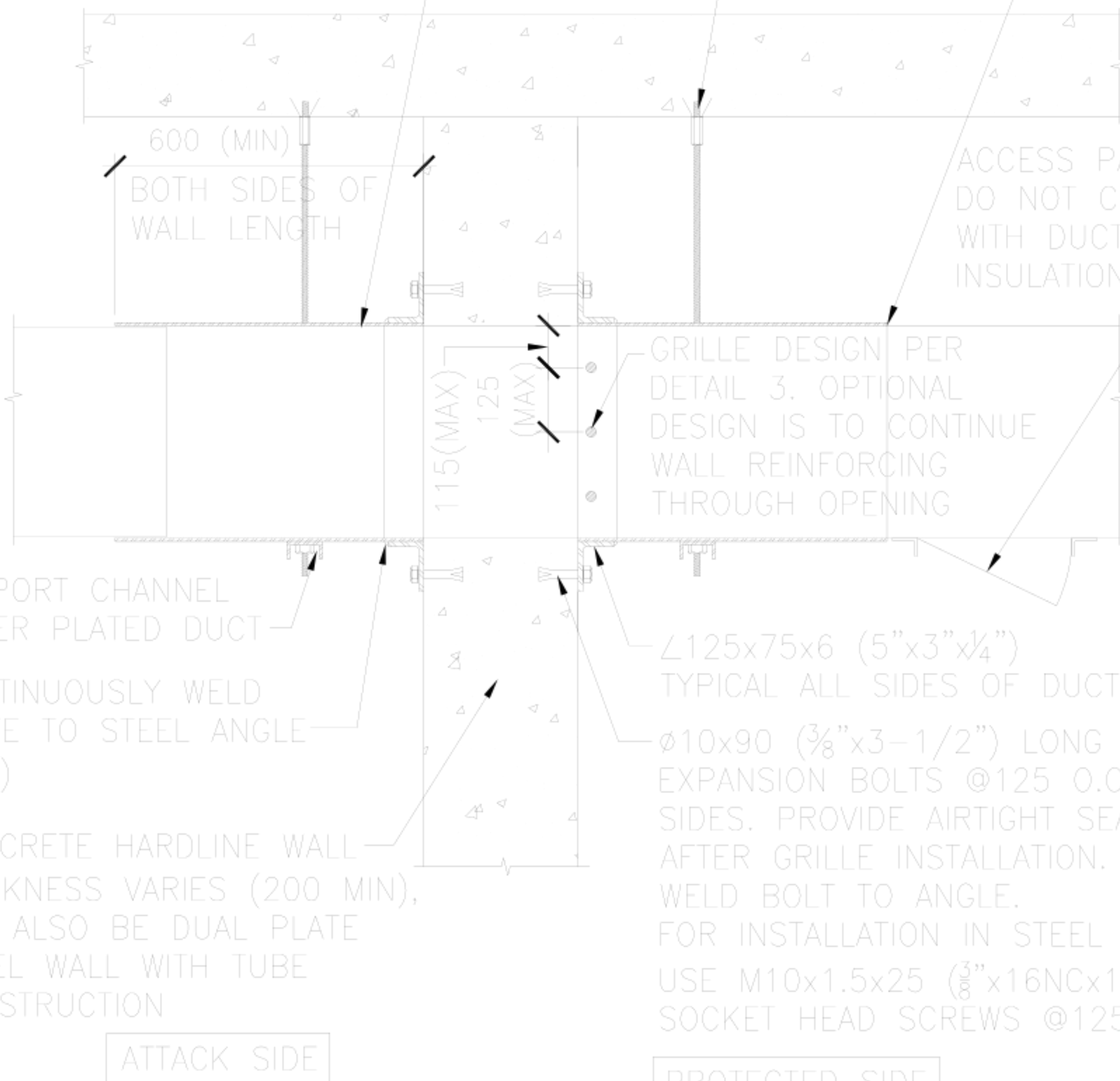


## 2 SECTION: 15 MINUTE FE DUCT PENETRATION

SCALE: 1:15

NOTE: THIS DUCT PENETRATION IS USED ABOVE CEILINGS AT DUCT TRANSITIONS THROUGH 15-MINUTE RATED CONCRETE HARDLINE WALLS

WARNING:
This document is the property of the U.S. Government. Further reproduction and/or distribution is prohibited without the express written permission of: Overseas Buildings Operations, U.S. Department of State, Washington, DC, 20522-0620. Information on this document is not to be altered except with the written approval of the individual whose seal appears hereon.

U.S. Department of State
Office of Overseas Buildings Operations

INTERIM 15 MINUTE FE DUCT PENETRATION GRILL PROTECTED SIDE
XGX-15N-DOS-01

OBO/SEB Security Details

| | |
|---|---|
| DWG.TITLE: XGX-15N-DOS-01.dwg | |
| REV: | DATE: |
| REV: | DATE: |
| SCALE: 1:15 | SHEET: 2 OF 4 |
| DRAWN BY: | |
| DATE: January 2012 | UNCLASSIFIED |

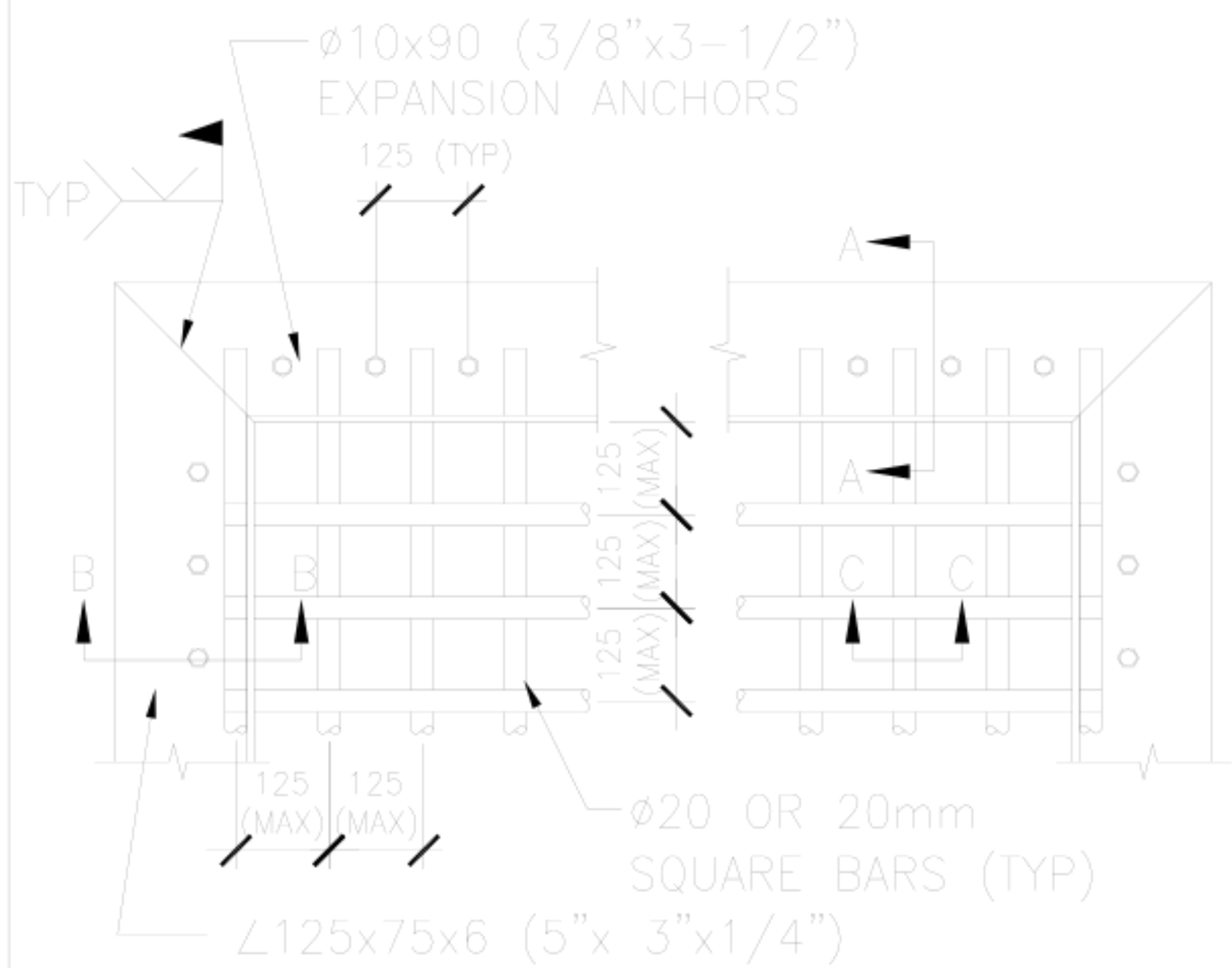


MATERIAL SPECIFICATIONS:
ANGLES:
fy=250 MPa (36 KSI) MIN.
REINFORCING BARS:
fy=400 MPa (60 KSI) MIN.
SQUARE BARS:
fy=250 MPa (36 KSI) MIN.

ANCHORING SPECIFICATIONS:
CONCRETE: M10x90 (3/8"x3-1/2")(MIN) DROP-IN EXPANSION ANCHORS @125 O.C. (MAX). ANCHOR/BOLT HEADS SHOULD BE WELDED TO THE FRAME
STEEL: M10x1.5x25 (3/8"-16NC x 1") SOCKET HEAD CAP SCREWS @125 O.C. ANCHOR/BOLT HEADS SHOULD BE WELDED TO THE FRAME
MASONRY: M10x150 (3/8"x6")(MIN) HILTI C-20 OR EQUIVALENT @250 O.C. ANCHOR/BOLT HEADS SHOULD BE WELDED TO THE FRAME

ALL DIMENSIONS ARE IN MM. ACCEPTABLE IP SIZES IN ( ).

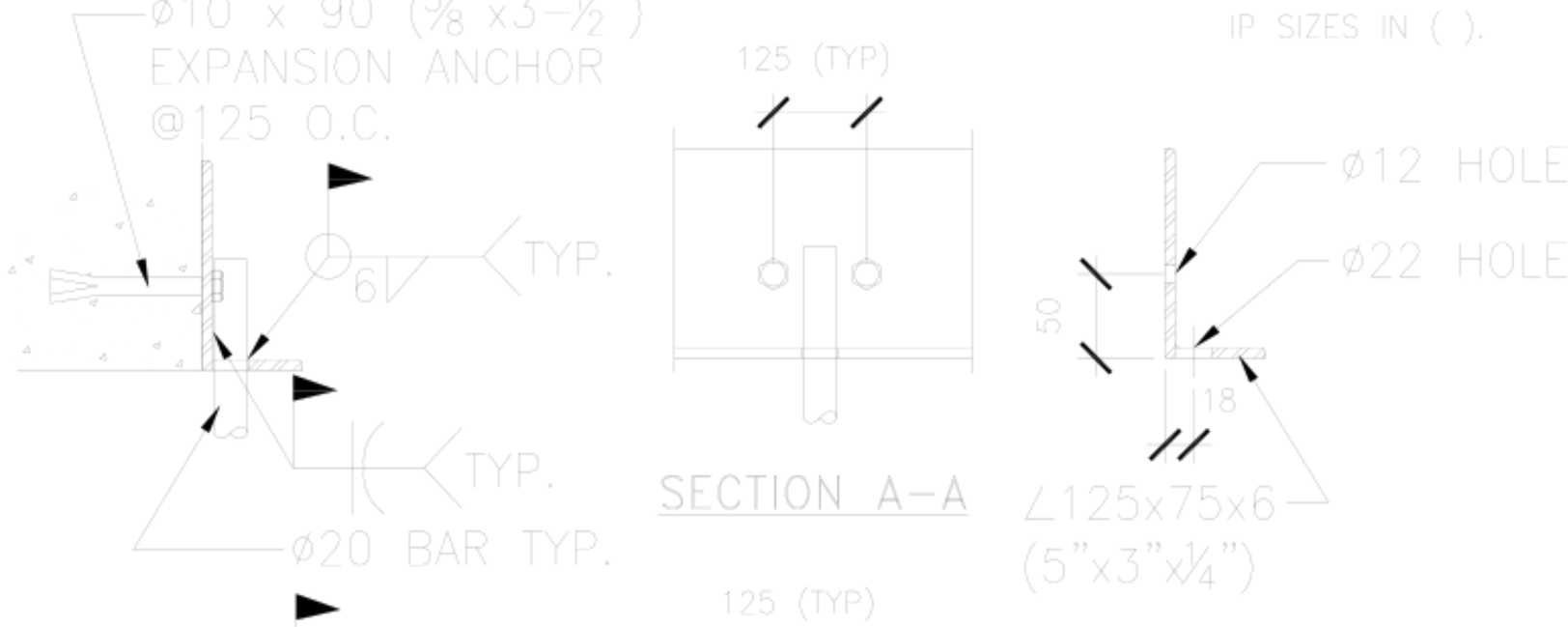


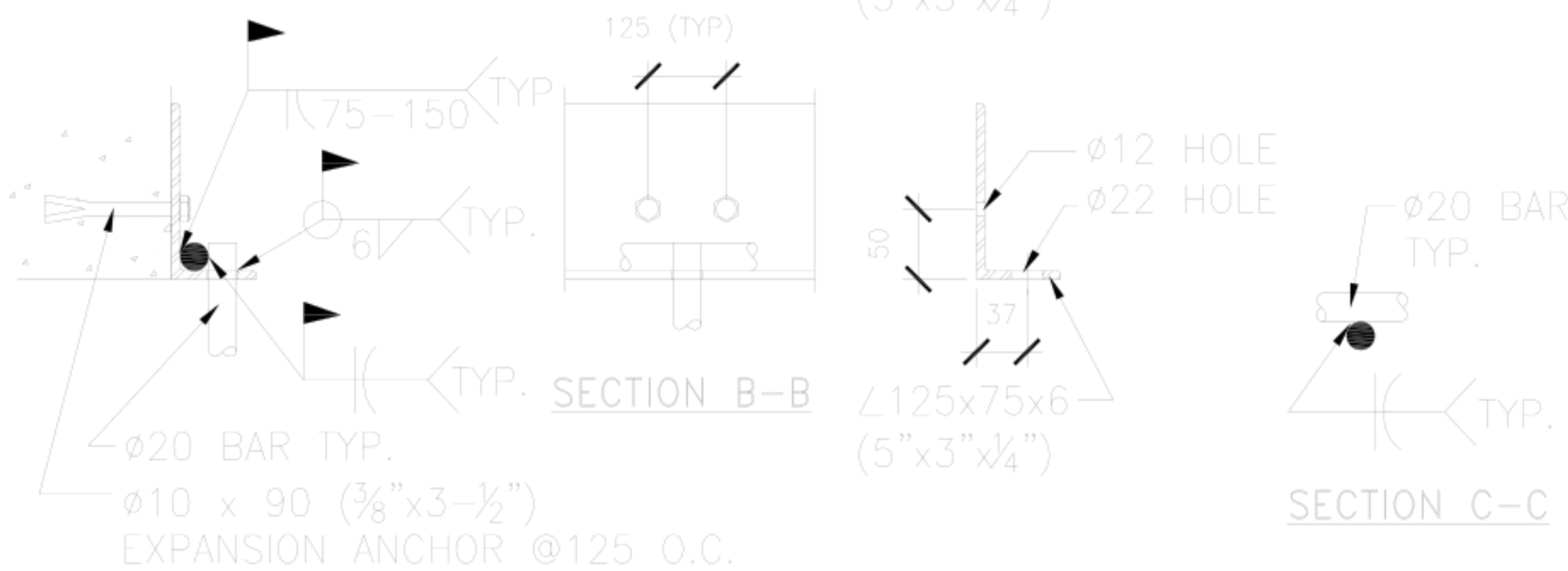


## 3 ELEVATION – 15 MINUTE FE GRILLE

SCALE: NTS

NOTE: THESE GRILLES ARE USED AT WINDOW OPENINGS, DUCT PENETRATIONS AND OTHER OPENINGS REQUIRING 15 MINUTE FE PROTECTION

WARNING:
This document is the property of the U.S. Government. Further reproduction and/or distribution is prohibited without the express written permission of: Overseas Buildings Operations, U.S. Department of State, Washington, DC, 20522-0620. Information on this document is not to be altered except with the written approval of the individual whose seal appears hereon.

U.S. Department of State
Office of Overseas Buildings Operations

INTERIM 15 MINUTE FE GRILLE
(ABOVE CEILING DUCT PENETRATION)
XGX-15N-DOS-01

OBO/SEB Security Details

| | |
|---|---|
| DWG.TITLE: XGX-15N-DOS-01.dwg | |
| REV: | DATE: |
| REV: | DATE: |
| SCALE: 1:15 | SHEET: 3 OF 4 |
| DRAWN BY: | |
| DATE: January 2012 | UNCLASSIFIED |

ALL DIMENSIONS ARE IN MM. ACCEPTABLE IP SIZES IN ( ).

MATERIAL SPECIFICATIONS:
ANGLES:
fy=250 MPa (36 KSI) MIN.
STEEL PLATE:
fy=250 MPa (36 KSI) MIN.

6 (¼") STEEL PLATE DUCT. INSIDE DIMS. TO BE SAME AS S.M. DUCT, CONTINUOUSLY WELD AT ALL JOINTS

DRILL IN EXPANSION ROD COUPLING (TYP), 16ø (⅝") HANGER ROD (MIN)

SHEET METAL DUCT, ATTACH TO STEEL PLATE PER SMACNA, TYPICAL

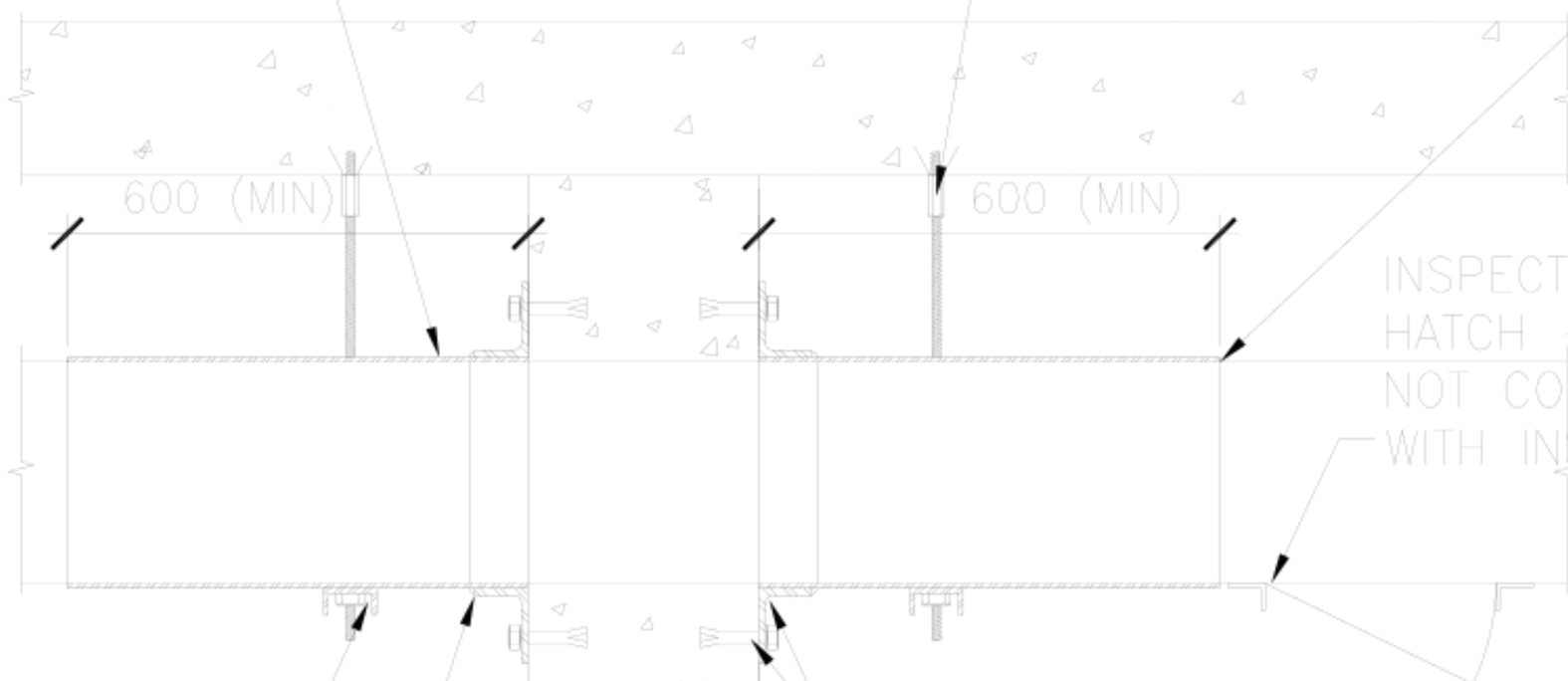


INSPECTION HATCH – DO NOT CONCEAL WITH INSULATION

SUPPORT CHANNEL UNDER PLATED DUCT

CONTINUOUSLY WELD PLATE TO STEEL ANGLE (TYP)

CONCRETE HARDLINE WALL 200 THICKNESS (MIN), MAY ALSO BE DUAL PLATE STEEL WALL W/ TUBE CONST.

∠125x75x6 (5"x3"x¼") ON ALL FOUR SIDES, ATTACH TO CONCRETE W/ 10ø (⅜"), 90 (3-½") LONG EXPANSION BOLTS @ 125 O.C. WELD TO ANGLE AFTER INSALLATION. MAY SUBSTITUTE 16ø (⅝"), 40 (1-½") LONG EXPANSION BOLTS @ 400 O.C. FOR DUCT STEEL EXTENSION ONLY.

ATTACK SIDE

PROTECTED SIDE

## 4 SECTION: 15 MINUTE BR DUCT PENETRATION

SCALE: 1:15

NOTE: THIS DUCT PENETRATION IS USED ABOVE CEILINGS WHERE DUCT SIZE IS NON-MAN PASSABLE (LESS THAN 620 SQ CM)

WARNING:
This document is the property of the U.S. Government. Further reproduction and/or distribution is prohibited without the express written permission of: Overseas Buildings Operations, U.S. Department of State, Washington, DC, 20522-0620. Information on this document is not to be altered except with the written approval of the individual whose seal appears hereon.

U.S. Department of State
Office of Overseas Buildings Operations

INTERIM 15 MINUTE DUCT PENETRATION WHEN DUCT IS NON-MAN PASSABLE
XGX-15N-DOS-01

OBO/SEB Security Details

| | |
|---|---|
| DWG.TITLE: XGX-15N-DOS-01.dwg | |
| REV: | DATE: |
| REV: | DATE: |
| SCALE: 1:15 | SHEET: 4 OF 4 |
| DRAWN BY: | |
| DATE: January 2012 | UNCLASSIFIED |

# Certified Assemblies

## 60-Minute FE/BR

Unclassified

# Certified Assemblies – 60 Minute

**GPC-60A-DOS-01 - 300-mm (12") thick concrete wall (with 12-mm (#4) @ 300-mm (12") o.c. EW-EF (rebar grids staggered front and back). Armor-piercing resistant.**

**GPC-60A-DOS-02 - 300-mm (12") thick concrete wall (with 12-mm (#4) @ 300-mm (12") o.c. EW-EF (rebar grids aligned). Armor-piercing resistant.**

**GPC-60R-DOS-02 - 250-mm (10”) reinforced concrete wall, 12-mm (#4) rebar 300mm (12”) o.c. each way, each face, rebar grids staggered.**

**GPK-60A-DOS-01 - 150-mm (6”) reinforced concrete with 6mm (1/4”) steel backing. Armor-piercing resistant.**

**GPK-60R-DOS-01 - 200-mm (8") concrete wall, 20-mm (#6) rebar 125-mm (5") o.c. each way.**

**GPS-60R-DOS-01 - Dual steel plate wall.**

# Certified Assemblies – 60 Minute

**GPS-60R-DOS-02 - Dual steel plate wall. Seismic variation of GPS-15R-DOS-01.**

**GPS-60R-DOS-03 - Dual steel plate wall, meets seismic requirements. Also used to provide 15-minute FE/BR protection.**

**GPS-60R-DOS-04 – Modified GPS-60R-DOS-01**

**GPS-60R-DOS-04A – Modified GPS-60R-DOS-04**

**GPS-60R-DOS-05 – 60 Minute Dual Plate Steel Wall**

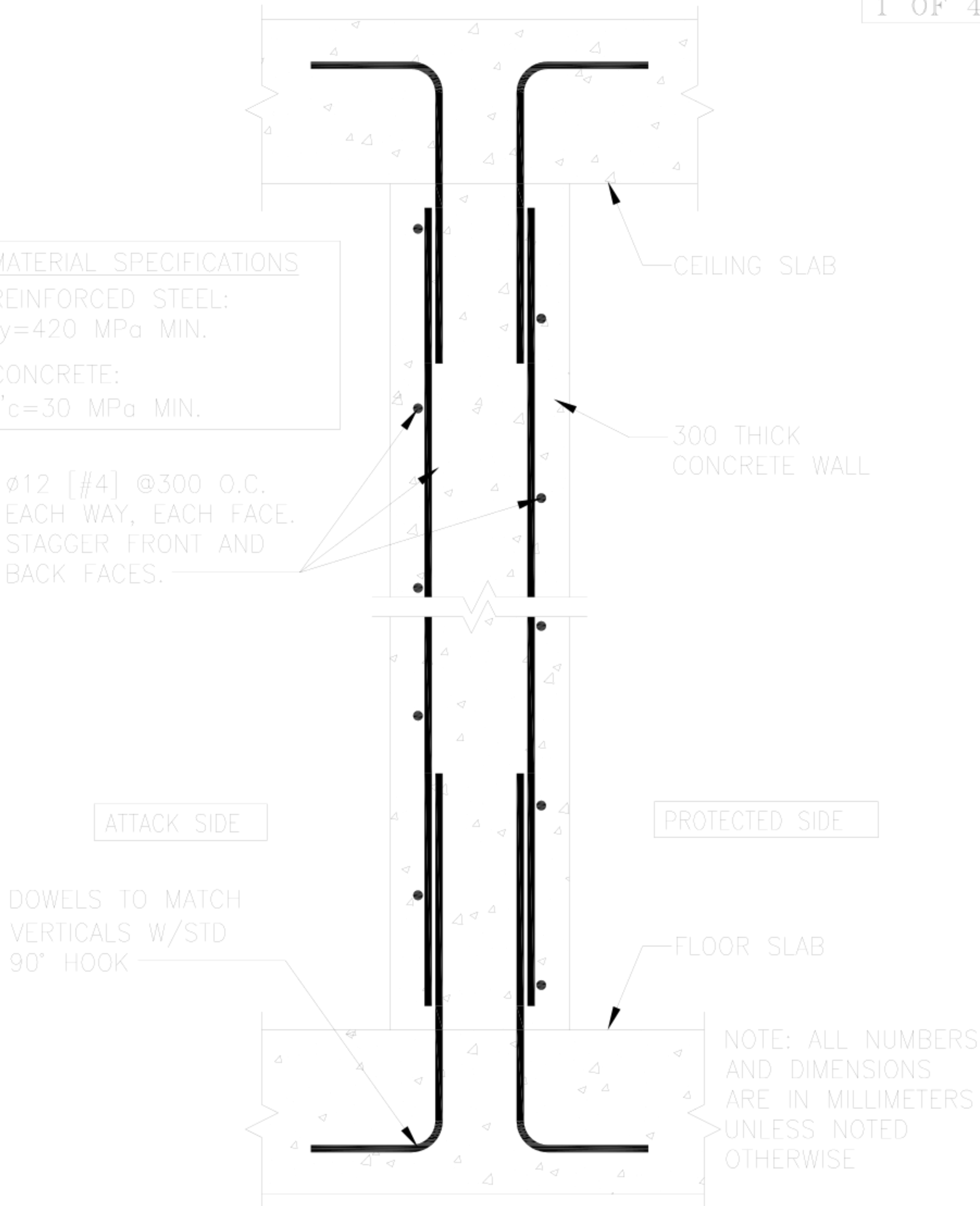


MATERIAL SPECIFICATIONS

REINFORCED STEEL:
fy=420 MPa MIN.

CONCRETE:
f'c=30 MPa MIN.

NOTE: ALL NUMBERS AND DIMENSIONS ARE IN MILLIMETERS UNLESS NOTED OTHERWISE

1 SECTION – 300mm CONCRETE WALL
SCALE: 1:10

NOTE: THIS WALL DESIGN IS USED AT HARDLINE WALLS REQUIRING 60 MINUTE FE/BR PROTECTION

WARNING:
This document is the property of the U.S. Government. Further reproduction and/or distribution is prohibited without the express written permission of: Overseas Buildings Operations, U.S. Department of State, Washington, DC, 20522-0620. Information on this document is not to be altered except with the written approval of the individual whose seal appears hereon.

U.S. Department of State
Office of Overseas Buildings Operations

60 MINUTE FE/BR 300mm WALL
GPC-60A-DOS-01

OBO/SEB Security Details

| | |
|---|---|
| DWG.TITLE: GPC-60A-DOS-01.dwg | |
| REV: | DATE: |
| REV: | DATE: |
| SCALE: 1:10 | SHEET: 1 OF 4 |
| DRAWN BY: | |
| DATE: January 2009 | UNCLASSIFIED |

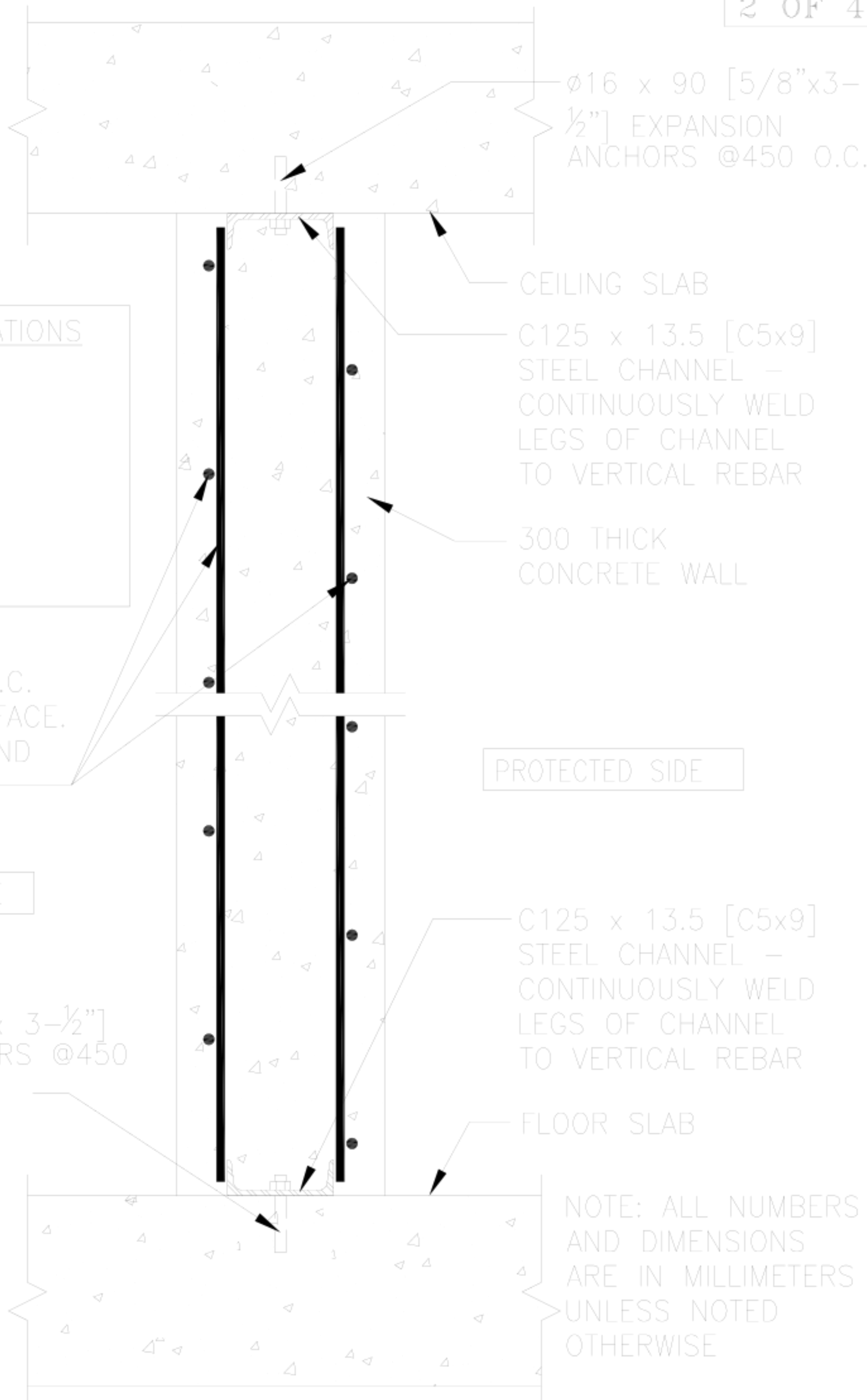


MATERIAL SPECIFICATIONS

REINFORCED STEEL:
fy=420 MPa MIN.

CONCRETE:
f'c=30 MPa MIN.

STEEL SHAPES:
fy=250 MPa MIN.

NOTE: ALL NUMBERS AND DIMENSIONS ARE IN MILLIMETERS UNLESS NOTED OTHERWISE

## 2 SECTION – 300mm CONCRETE WALL

SCALE: 1:10 (RETRO FIT CONDITION)

NOTE: THIS WALL DESIGN IS USED AT HARDLINE WALLS REQUIRING 60 MINUTE FE/BR PROTECTION

WARNING:
This document is the property of the U.S. Government. Further reproduction and/or distribution is prohibited without the express written permission of: Overseas Buildings Operations, U.S. Department of State, Washington, DC, 20522-0620. Information on this document is not to be altered except with the written approval of the individual whose seal appears hereon.

U.S. Department of State

Office of Overseas Buildings Operations

60 MINUTE FE/BR 300mm WALL
GPC-60A-DOS-01

OBO/SEB Security Details

| | |
|---|---|
| DWG.TITLE: GPC-60A-DOS-01.dwg | |
| REV: | DATE: |
| REV: | DATE: |
| SCALE: 1:10 | SHEET: 2 OF 4 |
| DRAWN BY: | |
| DATE: January 2009 | UNCLASSIFIED |

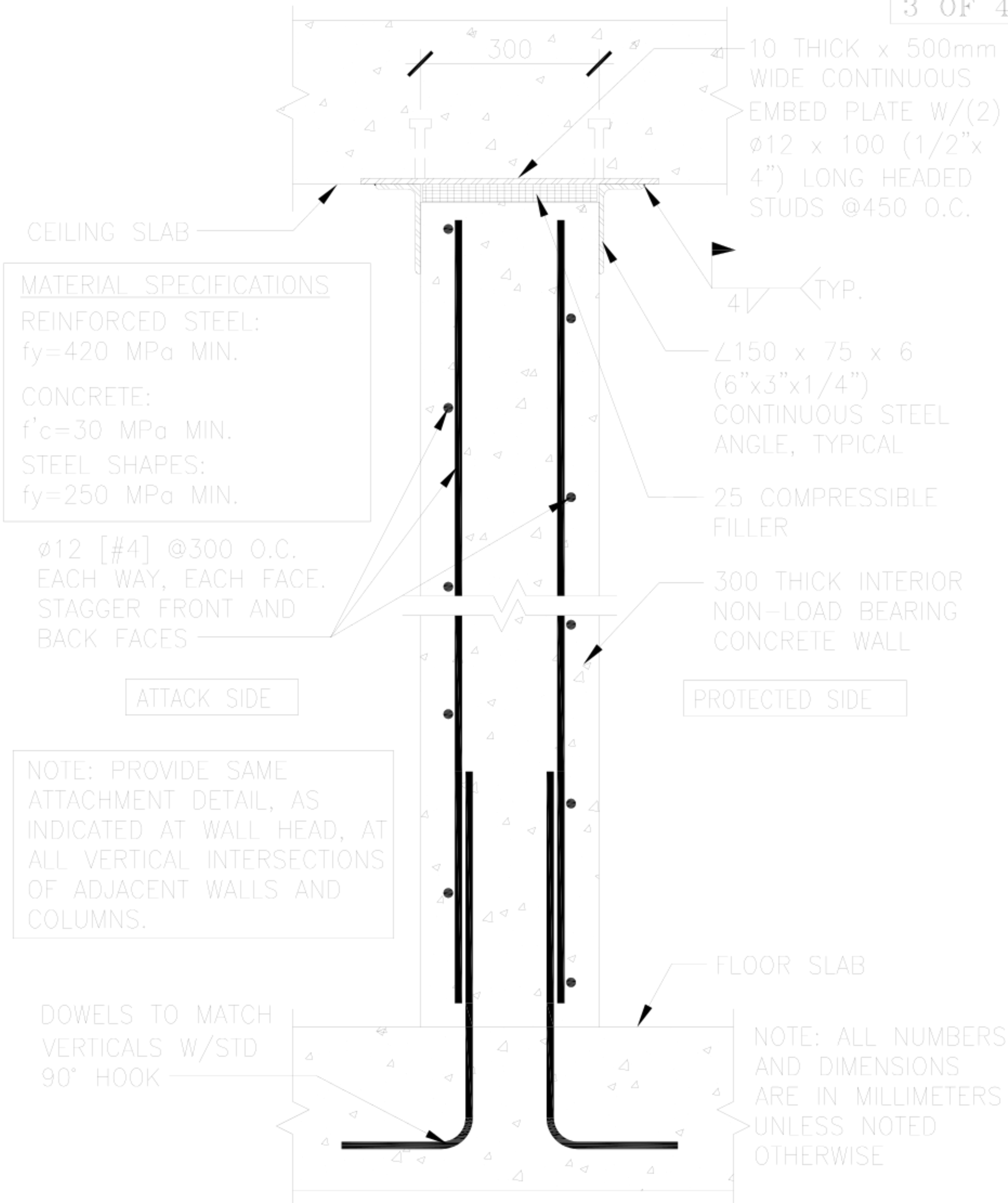


MATERIAL SPECIFICATIONS

REINFORCED STEEL:
fy=420 MPa MIN.

CONCRETE:
f'c=30 MPa MIN.

STEEL SHAPES:
fy=250 MPa MIN.

NOTE: PROVIDE SAME ATTACHMENT DETAIL, AS INDICATED AT WALL HEAD, AT ALL VERTICAL INTERSECTIONS OF ADJACENT WALLS AND COLUMNS.

NOTE: ALL NUMBERS AND DIMENSIONS ARE IN MILLIMETERS UNLESS NOTED OTHERWISE

## 3 SECTION – 300mm CONCRETE WALL

SCALE: 1:10 (NON-LOAD BEARING #1)

NOTE: THIS WALL DESIGN IS USED AT HARDLINE WALLS REQUIRING 60 MINUTE FE/BR PROTECTION

WARNING:
This document is the property of the U.S. Government. Further reproduction and/or distribution is prohibited without the express written permission of: Overseas Buildings Operations, U.S. Department of State, Washington, DC, 20522-0620. Information on this document is not to be altered except with the written approval of the individual whose seal appears hereon.

U.S. Department of State
Office of Overseas Buildings Operations

60 MINUTE FE/BR 300mm WALL
GPC-60A-DOS-01

OBO/SEB Security Details

| | |
|---|---|
| DWG.TITLE: GPC-60A-DOS-01.dwg | |
| REV: | DATE: |
| REV: | DATE: |
| SCALE: 1:10 | SHEET: 3 OF 4 |
| DRAWN BY: | |
| DATE: January 2011 | UNCLASSIFIED |

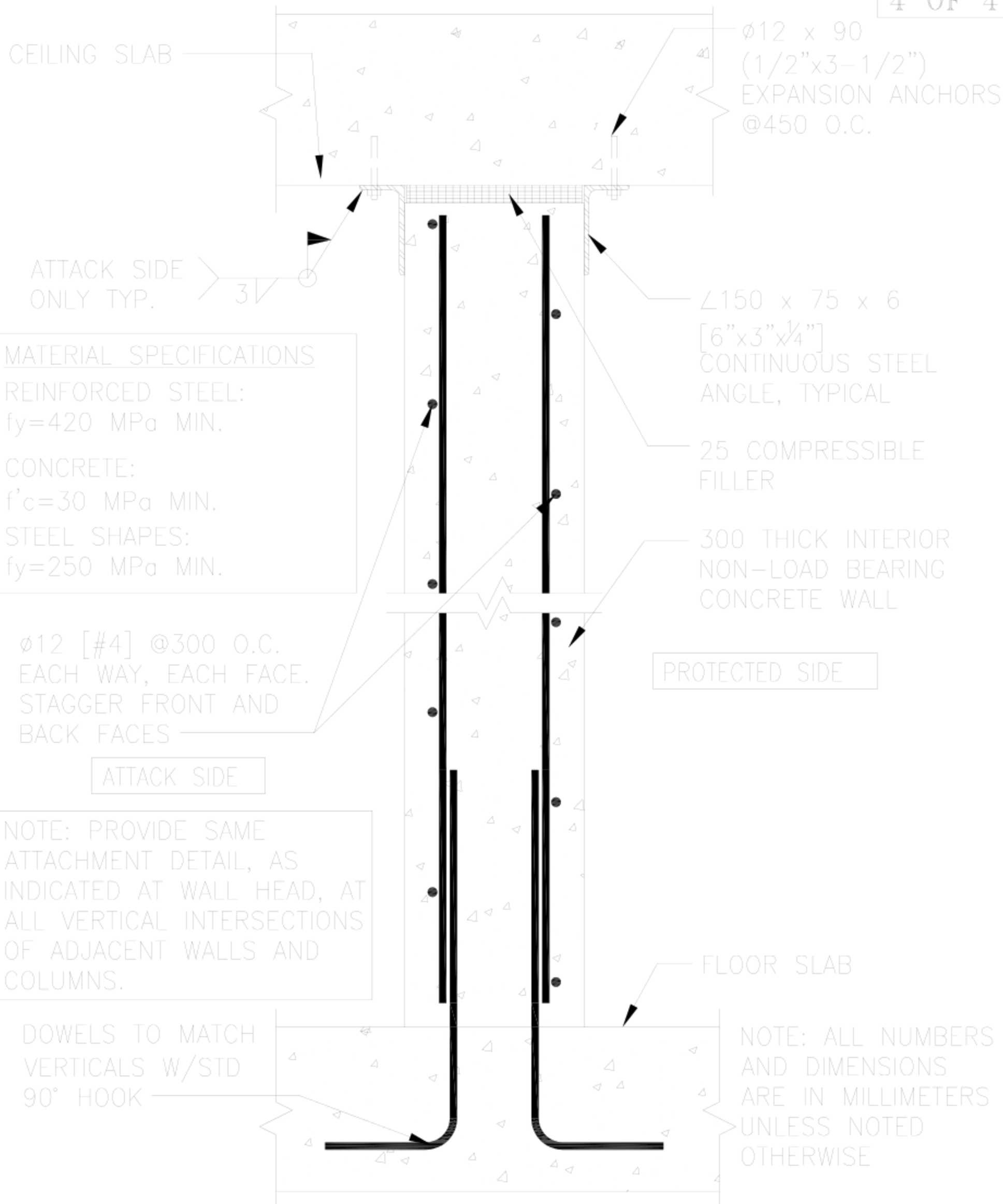


MATERIAL SPECIFICATIONS

REINFORCED STEEL:
fy=420 MPa MIN.

CONCRETE:
f'c=30 MPa MIN.

STEEL SHAPES:
fy=250 MPa MIN.

NOTE: PROVIDE SAME ATTACHMENT DETAIL, AS INDICATED AT WALL HEAD, AT ALL VERTICAL INTERSECTIONS OF ADJACENT WALLS AND COLUMNS.

NOTE: ALL NUMBERS AND DIMENSIONS ARE IN MILLIMETERS UNLESS NOTED OTHERWISE

## 4 SECTION – 300mm CONCRETE WALL

SCALE: 1:10 (NON-LOAD BEARING #2)

NOTE: THIS WALL DESIGN IS USED AT HARDLINE WALLS REQUIRING 60 MINUTE FE/BR PROTECTION

WARNING:
This document is the property of the U.S. Government. Further reproduction and/or distribution is prohibited without the express written permission of: Overseas Buildings Operations, U.S. Department of State, Washington, DC, 20522-0620. Information on this document is not to be altered except with the written approval of the individual whose seal appears hereon.

U.S. Department of State

Office of Overseas Buildings Operations

60 MINUTE FE/BR 300mm WALL
GPC-60A-DOS-01

OBO/SEB Security Details

| | |
|---|---|
| DWG.TITLE: GPC-60A-DOS-01.dwg | |
| REV: | DATE: |
| REV: | DATE: |
| SCALE: 1:10 | SHEET: 4 OF 4 |
| DRAWN BY: | |
| DATE: January 2011 | UNCLASSIFIED |

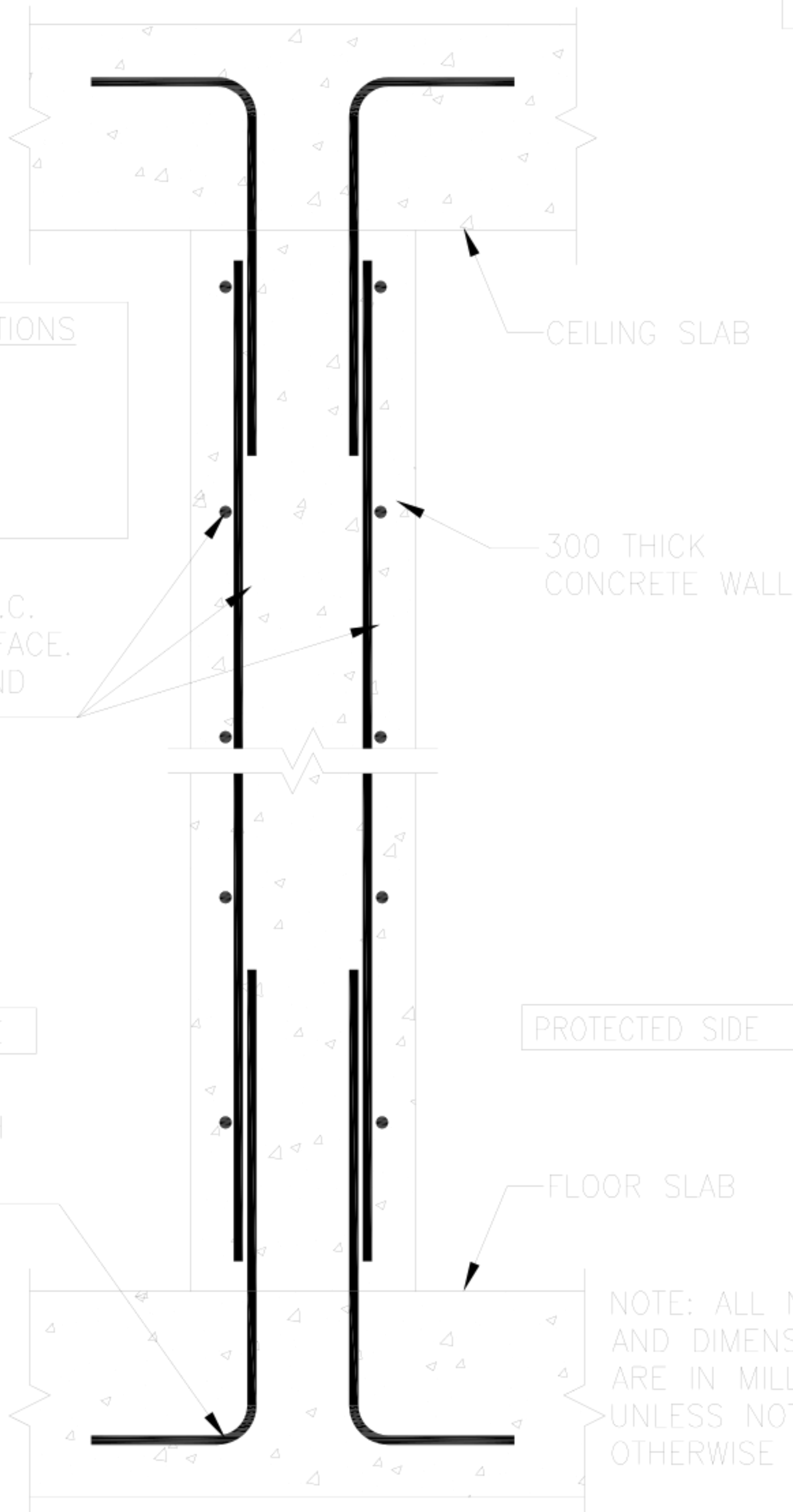


MATERIAL SPECIFICATIONS

REINFORCED STEEL:
fy=420 MPa MIN.

CONCRETE:
f'c=30 MPa MIN.

NOTE: ALL NUMBERS AND DIMENSIONS ARE IN MILLIMETERS UNLESS NOTED OTHERWISE

## 1 SECTION – 300mm CONCRETE WALL

SCALE: 1:10

NOTE: THIS WALL DESIGN IS USED AT HARDLINE WALLS REQUIRING 60 MINUTE FE/BR PROTECTION

WARNING:
This document is the property of the U.S. Government. Further reproduction and/or distribution is prohibited without the express written permission of: Overseas Buildings Operations, U.S. Department of State, Washington, DC, 20522-0620. Information on this document is not to be altered except with the written approval of the individual whose seal appears hereon.

U.S. Department of State

Office of Overseas Buildings Operations

# 60 MINUTE FE/BR 300mm WALL GPC-60A-DOS-02

OBO/SEB Security Details

| | |
|---|---|
| DWG.TITLE: GPC-60A-DOS-02.dwg | |
| REV: | DATE: |
| REV: | DATE: |
| SCALE: 1:10 | SHEET: 1 OF 4 |
| DRAWN BY: | |
| DATE: January 2009 | UNCLASSIFIED |

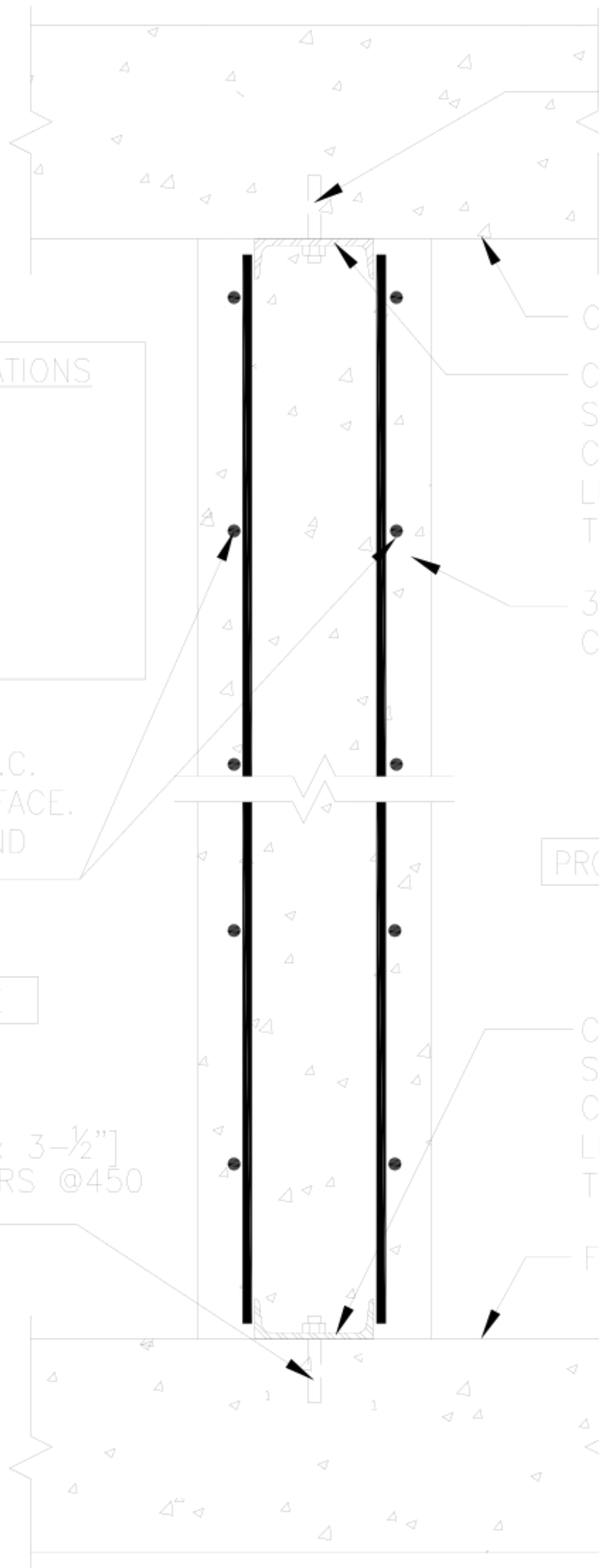


MATERIAL SPECIFICATIONS

REINFORCED STEEL:
fy=420 MPa MIN.

CONCRETE:
f'c=30 MPa MIN.

STEEL SHAPES:
fy=250 MPa MIN.

NOTE: ALL NUMBERS AND DIMENSIONS ARE IN MILLIMETERS UNLESS NOTED OTHERWISE

## 2 SECTION – 300mm CONCRETE WALL

SCALE: 1:10 (RETRO FIT CONDITION)

NOTE: THIS WALL DESIGN IS USED AT HARDLINE WALLS REQUIRING 60 MINUTE FE/BR PROTECTION

WARNING:
This document is the property of the U.S. Government. Further reproduction and/or distribution is prohibited without the express written permission of: Overseas Buildings Operations, U.S. Department of State, Washington, DC, 20522-0620. Information on this document is not to be altered except with the written approval of the individual whose seal appears hereon.

U.S. Department of State

Office of Overseas Buildings Operations

60 MINUTE FE/BR 300mm WALL
GPC-60A-DOS-02

OBO/SEB Security Details

| | |
|---|---|
| DWG.TITLE: GPC-60A-DOS-02.dwg | |
| REV: | DATE: |
| REV: | DATE: |
| SCALE: 1:10 | SHEET: 2 OF 4 |
| DRAWN BY: | |
| DATE: January 2009 | UNCLASSIFIED |

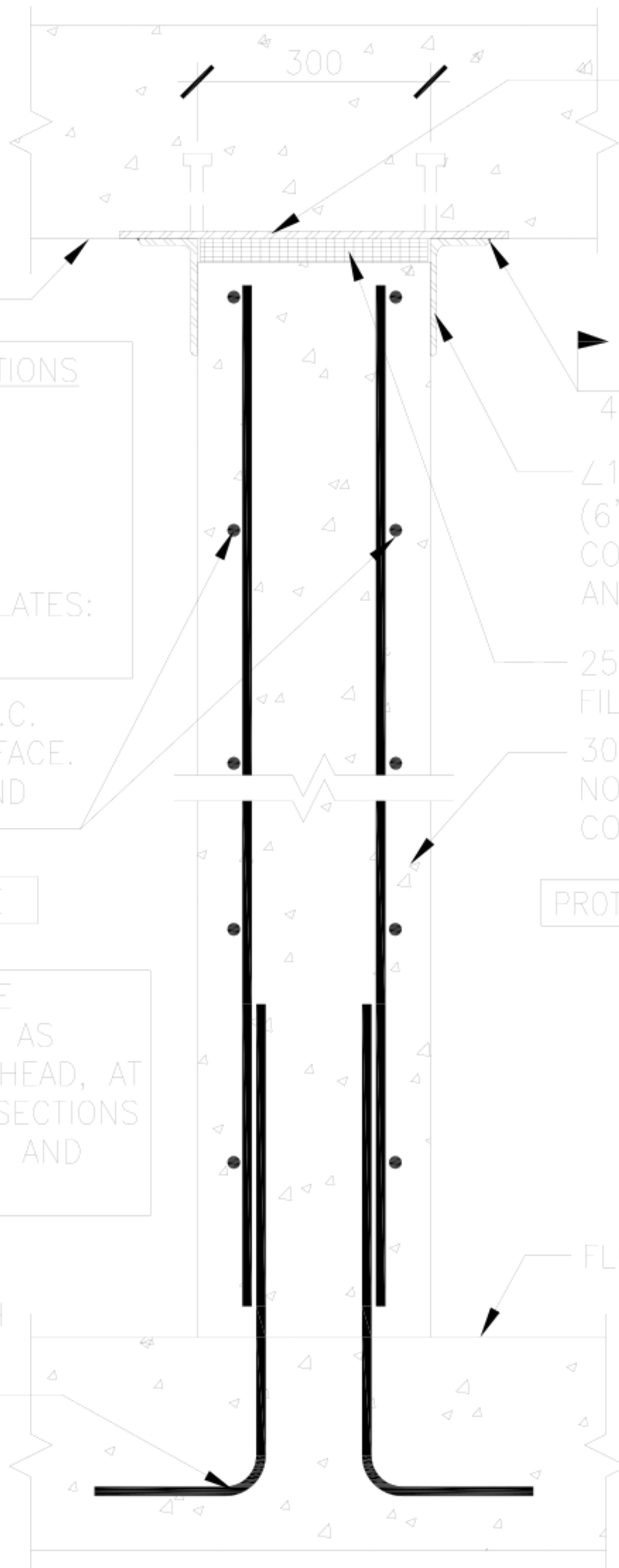


MATERIAL SPECIFICATIONS

REINFORCED STEEL:
fy=420 MPa MIN.

CONCRETE:
f'c=30 MPa MIN.

STEEL ANGLES & PLATES:
fy=250 MPa MIN.

NOTE: PROVIDE SAME ATTACHMENT DETAIL, AS INDICATED AT WALL HEAD, AT ALL VERTICAL INTERSECTIONS OF ADJACENT WALLS AND COLUMNS.

NOTE: ALL NUMBERS AND DIMENSIONS ARE IN MILLIMETERS UNLESS NOTED OTHERWISE

## 3 SECTION – 300mm CONCRETE WALL

SCALE: 1:10 (NON-LOAD BEARING #1)

NOTE: THIS WALL DESIGN IS USED AT HARDLINE WALLS REQUIRING 60 MINUTE FE/BR PROTECTION

WARNING:
This document is the property of the U.S. Government. Further reproduction and/or distribution is prohibited without the express written permission of: Overseas Buildings Operations, U.S. Department of State, Washington, DC, 20522-0620. Information on this document is not to be altered except with the written approval of the individual whose seal appears hereon.

U.S. Department of State
Office of Overseas Buildings Operations

60 MINUTE FE/BR 300mm WALL
GPC-60A-DOS-02

OBO/SEB Security Details

| | |
|---|---|
| DWG.TITLE: GPC-60A-DOS-02.dwg | |
| REV: | DATE: |
| REV: | DATE: |
| SCALE: 1:10 | SHEET: 3 OF 4 |
| DRAWN BY: | |
| DATE: January 2011 | UNCLASSIFIED |

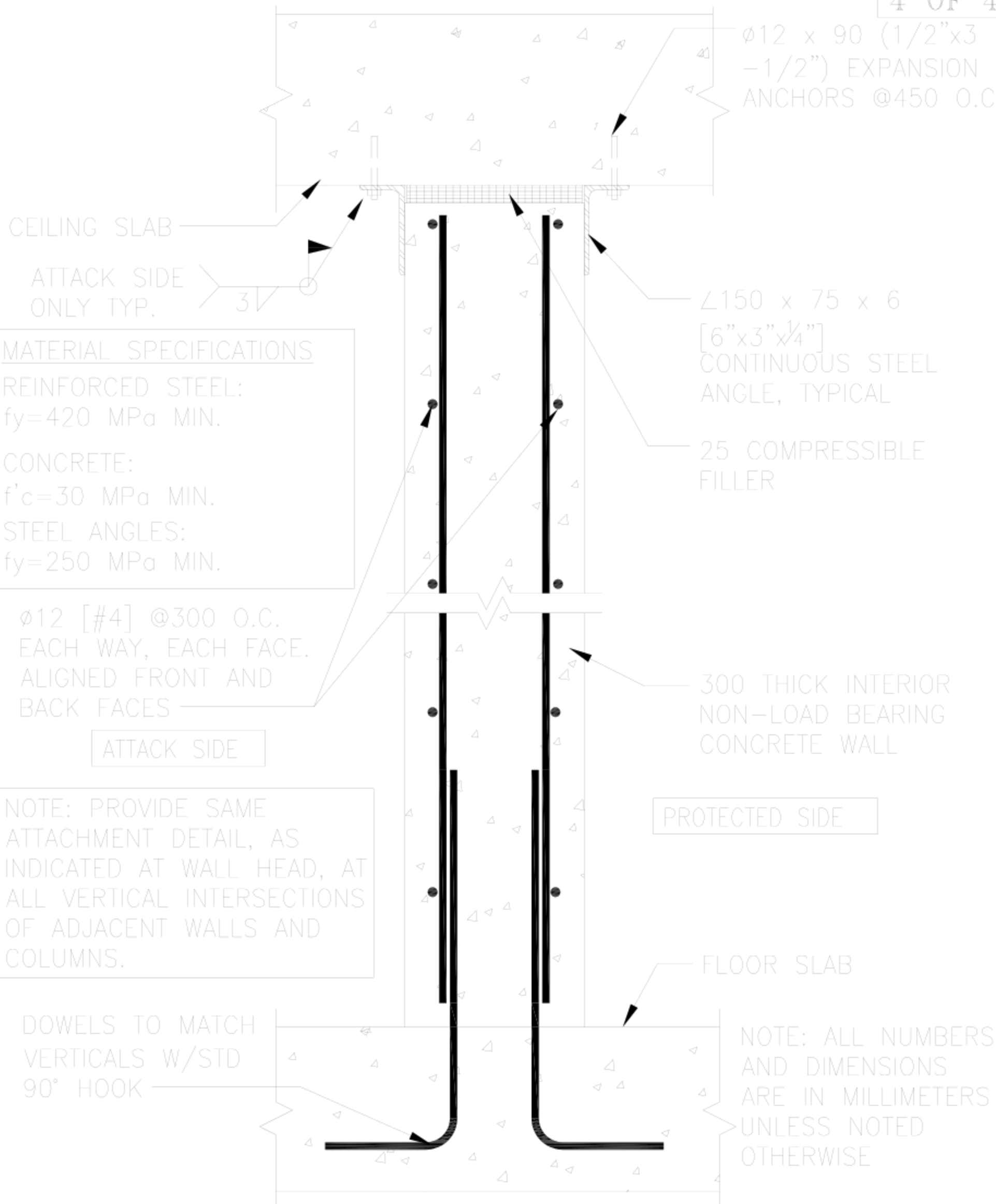


MATERIAL SPECIFICATIONS

REINFORCED STEEL:
fy=420 MPa MIN.

CONCRETE:
f'c=30 MPa MIN.

STEEL ANGLES:
fy=250 MPa MIN.

NOTE: PROVIDE SAME ATTACHMENT DETAIL, AS INDICATED AT WALL HEAD, AT ALL VERTICAL INTERSECTIONS OF ADJACENT WALLS AND COLUMNS.

NOTE: ALL NUMBERS AND DIMENSIONS ARE IN MILLIMETERS UNLESS NOTED OTHERWISE

## 4 SECTION – 300mm CONCRETE WALL

SCALE: 1:10 (NON-LOAD BEARING #2)

NOTE: THIS WALL DESIGN IS USED AT HARDLINE WALLS REQUIRING 60 MINUTE FE/BR PROTECTION

WARNING:
This document is the property of the U.S. Government. Further reproduction and/or distribution is prohibited without the express written permission of: Overseas Buildings Operations, U.S. Department of State, Washington, DC, 20522-0620. Information on this document is not to be altered except with the written approval of the individual whose seal appears hereon.

U.S. Department of State
Office of Overseas Buildings Operations

60 MINUTE FE/BR 300mm WALL
GPC-60A-DOS-02

OBO/SEB Security Details

| | |
|---|---|
| DWG.TITLE: GPC-60A-DOS-02.dwg | |
| REV: | DATE: |
| REV: | DATE: |
| SCALE: 1:10 | SHEET: 4 OF 4 |
| DRAWN BY: | |
| DATE: January 2011 | UNCLASSIFIED |

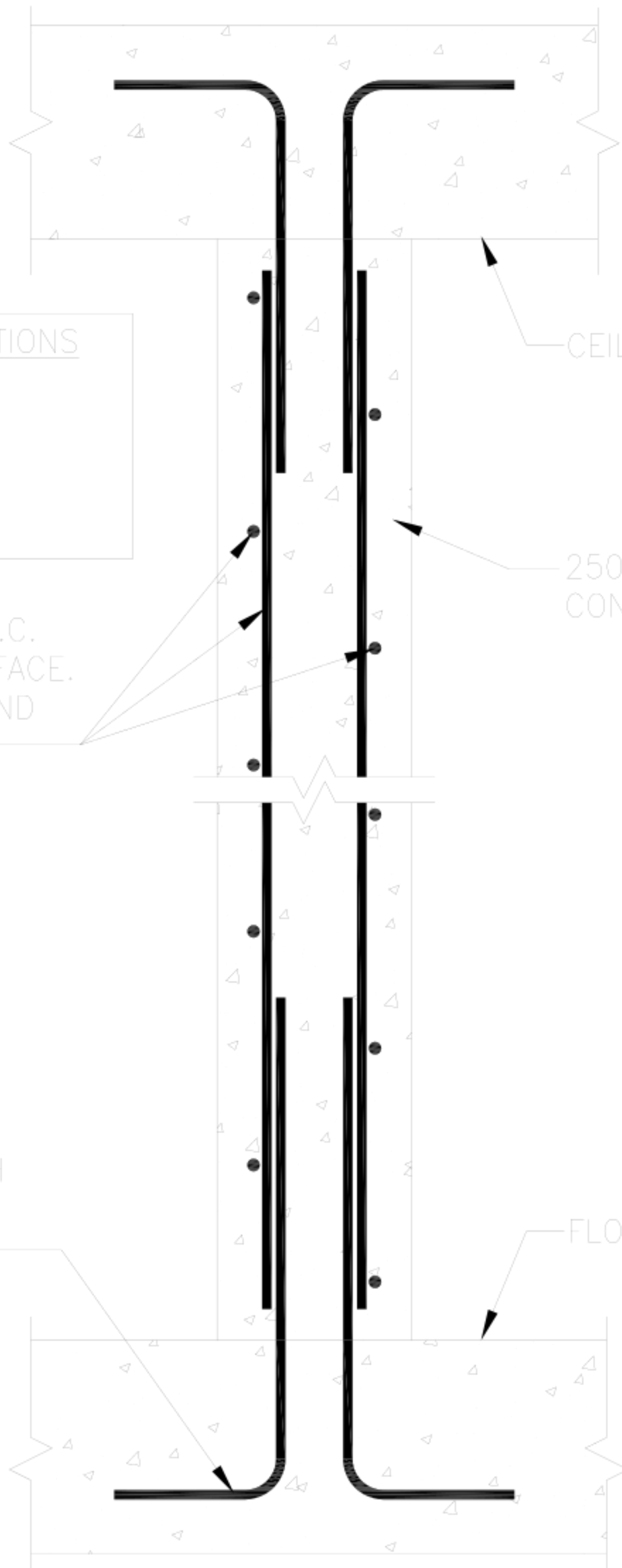


MATERIAL SPECIFICATIONS

REINFORCED STEEL:
fy=420 MPa MIN.

CONCRETE:
f'c=30 MPa MIN.

ø12 [#4] @300 O.C.
EACH WAY, EACH FACE.
STAGGER FRONT AND
BACK FACES.

DOWELS TO MATCH
VERTICALS W/STD
90° HOOK

NOTE: ALL NUMBERS
AND DIMENSIONS
ARE IN MILLIMETERS
UNLESS NOTED
OTHERWISE

1 SECTION – 250mm CONCRETE WALL

SCALE: 1:10

NOTE: THIS WALL DESIGN IS USED AT HARDLINE
WALLS REQUIRING 60 MINUTE FE/BR PROTECTION

WARNING:
This document is the property of the U.S. Government. Further reproduction and/or distribution is prohibited without the express written permission of: Overseas Buildings Operations, U.S. Department of State, Washington, DC, 20522-0620. Information on this document is not to be altered except with the written approval of the individual whose seal appears hereon.

U.S. Department of State
Office of
Overseas Buildings Operations

60 MINUTE FE/BR 250mm WALL
GPC-60R-DOS-02

OBO/SEB Security Details

| | |
|---|---|
| DWG.TITLE: GPC-60R-DOS-02.dwg | |
| REV: | DATE: |
| REV: | DATE: |
| SCALE: 1:10 | SHEET: 1 OF 4 |
| DRAWN BY: | |
| DATE: January 2009 | UNCLASSIFIED |

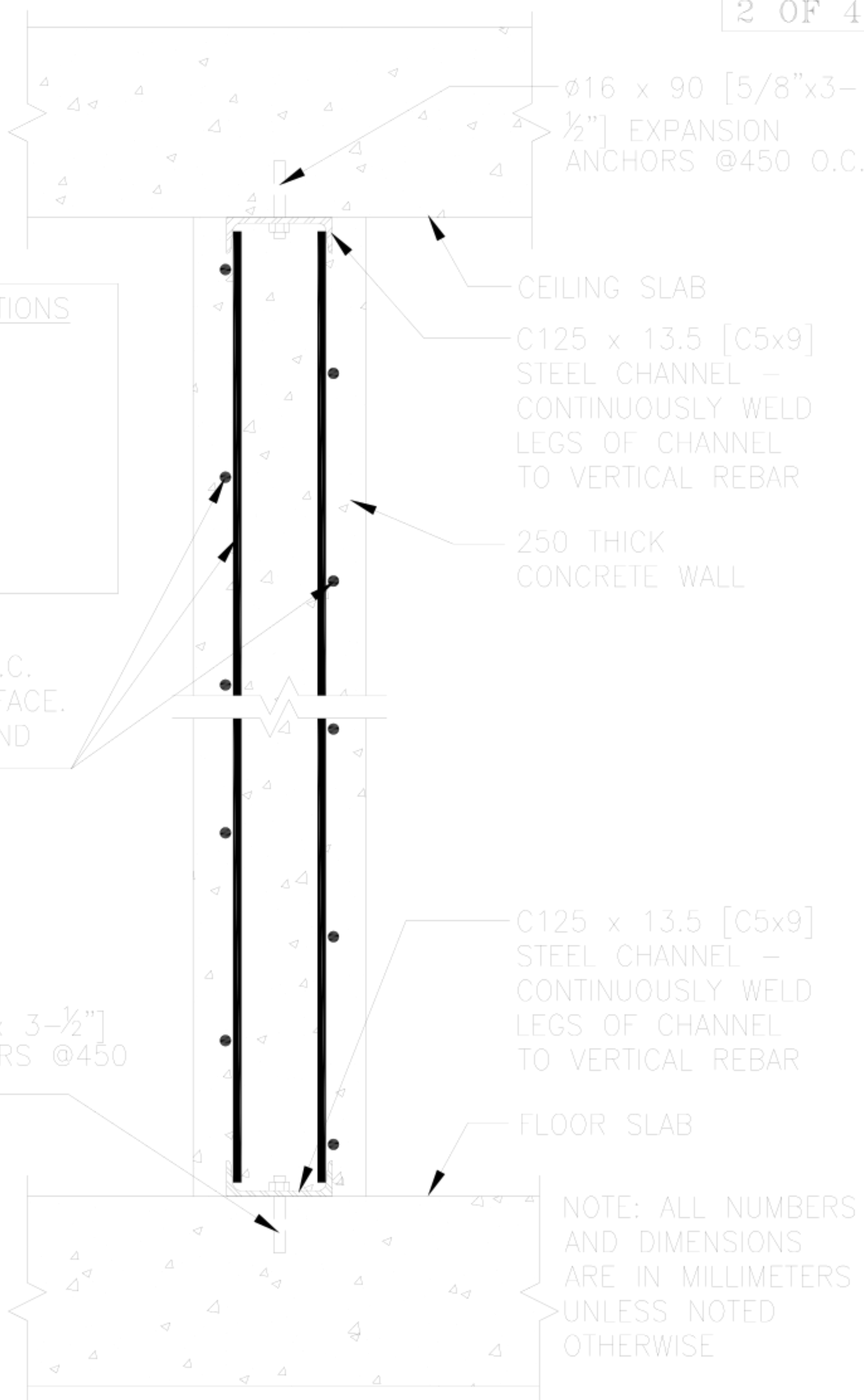


MATERIAL SPECIFICATIONS

REINFORCED STEEL:
fy=420 MPa MIN.

CONCRETE:
f'c=30 MPa MIN.

STEEL SHAPES:
fy=250 MPa MIN.

NOTE: ALL NUMBERS AND DIMENSIONS ARE IN MILLIMETERS UNLESS NOTED OTHERWISE

## 2 SECTION – 250mm CONCRETE WALL

SCALE: 1:10 (RETRO FIT CONDITION)

NOTE: THIS WALL DESIGN IS USED AT HARDLINE WALLS REQUIRING 60 MINUTE FE/BR PROTECTION

WARNING:
This document is the property of the U.S. Government. Further reproduction and/or distribution is prohibited without the express written permission of: Overseas Buildings Operations, U.S. Department of State, Washington, DC, 20522-0620. Information on this document is not to be altered except with the written approval of the individual whose seal appears hereon.

U.S. Department of State
Office of Overseas Buildings Operations

60 MINUTE FE/BR 250mm WALL
GPC-60R-DOS-02

OBO/SEB Security Details

| | |
|---|---|
| DWG.TITLE: GPC-60R-DOS-02.dwg | |
| REV: | DATE: |
| REV: | DATE: |
| SCALE: 1:10 | SHEET: 2 OF 4 |
| DRAWN BY: | |
| DATE: January 2009 | UNCLASSIFIED |

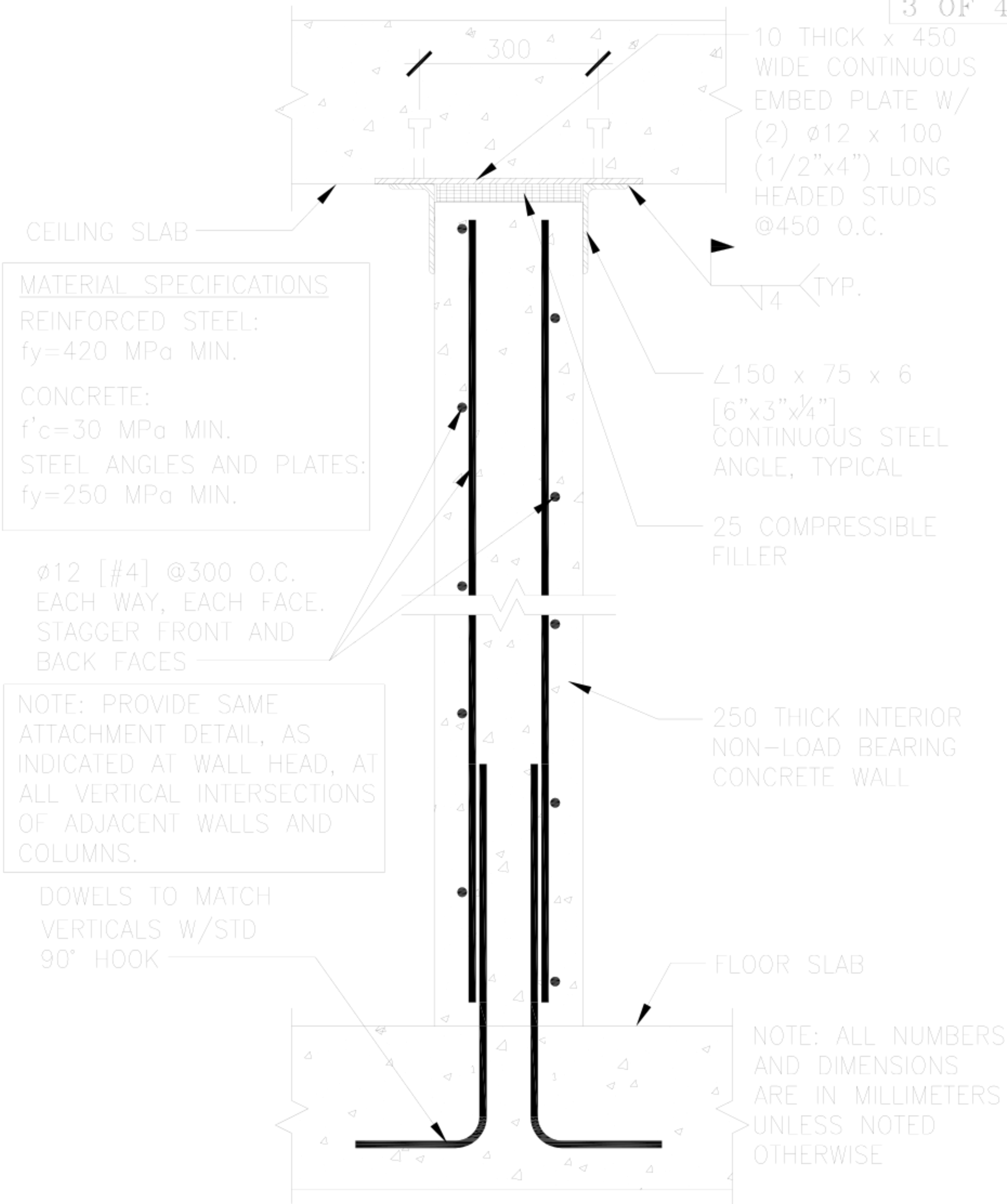


MATERIAL SPECIFICATIONS

REINFORCED STEEL:
fy=420 MPa MIN.

CONCRETE:
f'c=30 MPa MIN.

STEEL ANGLES AND PLATES:
fy=250 MPa MIN.

NOTE: PROVIDE SAME ATTACHMENT DETAIL, AS INDICATED AT WALL HEAD, AT ALL VERTICAL INTERSECTIONS OF ADJACENT WALLS AND COLUMNS.

NOTE: ALL NUMBERS AND DIMENSIONS ARE IN MILLIMETERS UNLESS NOTED OTHERWISE

## 3 SECTION – 250mm CONCRETE WALL

SCALE: 1:10 (NON-LOAD BEARING #1)

NOTE: THIS WALL DESIGN IS USED AT HARDLINE WALLS REQUIRING 60 MINUTE FE/BR PROTECTION

WARNING:
This document is the property of the U.S. Government. Further reproduction and/or distribution is prohibited without the express written permission of: Overseas Buildings Operations, U.S. Department of State, Washington, DC, 20522-0620. Information on this document is not to be altered except with the written approval of the individual whose seal appears hereon.

U.S. Department of State
Office of Overseas Buildings Operations

60 MINUTE FE/BR 250mm WALL
GPC-60R-DOS-02

OBO/SEB Security Details

| | |
|---|---|
| DWG.TITLE: GPC-60R-DOS-02.dwg | |
| REV: | DATE: |
| REV: | DATE: |
| SCALE: 1:10 | SHEET: 3 OF 4 |
| DRAWN BY: | |
| DATE: January 2011 | UNCLASSIFIED |

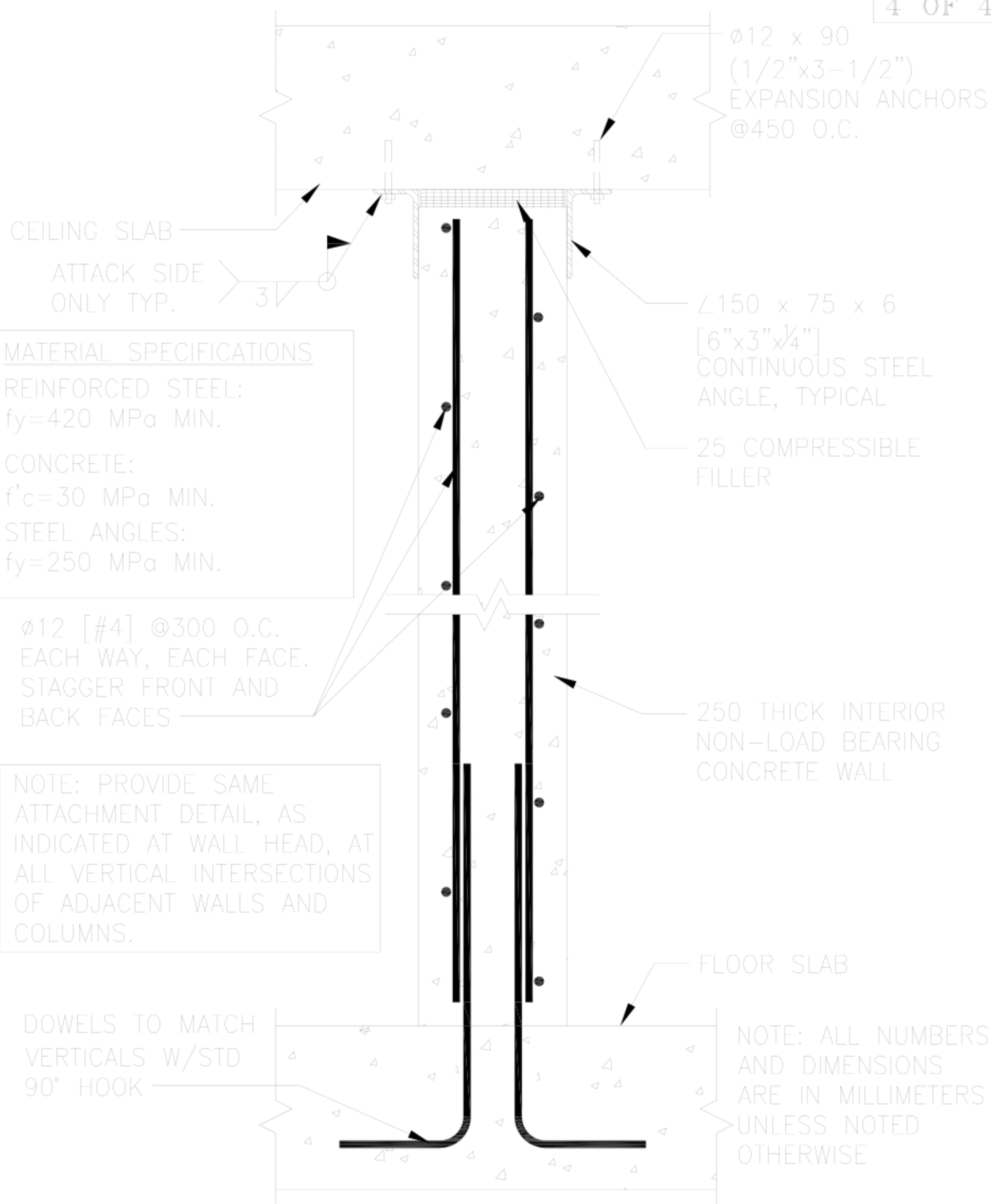


MATERIAL SPECIFICATIONS

REINFORCED STEEL:
fy=420 MPa MIN.

CONCRETE:
f'c=30 MPa MIN.

STEEL ANGLES:
fy=250 MPa MIN.

NOTE: PROVIDE SAME ATTACHMENT DETAIL, AS INDICATED AT WALL HEAD, AT ALL VERTICAL INTERSECTIONS OF ADJACENT WALLS AND COLUMNS.

NOTE: ALL NUMBERS AND DIMENSIONS ARE IN MILLIMETERS UNLESS NOTED OTHERWISE

## 4 SECTION – 250mm CONCRETE WALL

SCALE: 1:10 (NON-LOAD BEARING #2)

NOTE: THIS WALL DESIGN IS USED AT HARDLINE WALLS REQUIRING 60 MINUTE FE/BR PROTECTION

WARNING:
This document is the property of the U.S. Government. Further reproduction and/or distribution is prohibited without the express written permission of: Overseas Buildings Operations, U.S. Department of State, Washington, DC, 20522-0620. Information on this document is not to be altered except with the written approval of the individual whose seal appears hereon.

U.S. Department of State
Office of Overseas Buildings Operations

60 MINUTE FE/BR 250mm WALL
GPC-60R-DOS-02

OBO/SEB Security Details

| | |
|---|---|
| DWG.TITLE: GPC-60R-DOS-02.dwg | |
| REV: | DATE: |
| REV: | DATE: |
| SCALE: 1:10 | SHEET: 4 OF 4 |
| DRAWN BY: | |
| DATE: January 2011 | UNCLASSIFIED |

MATERIAL SPECIFICATIONS

STEEL PLATE & ANGLES:
fy=250 MPa MIN.

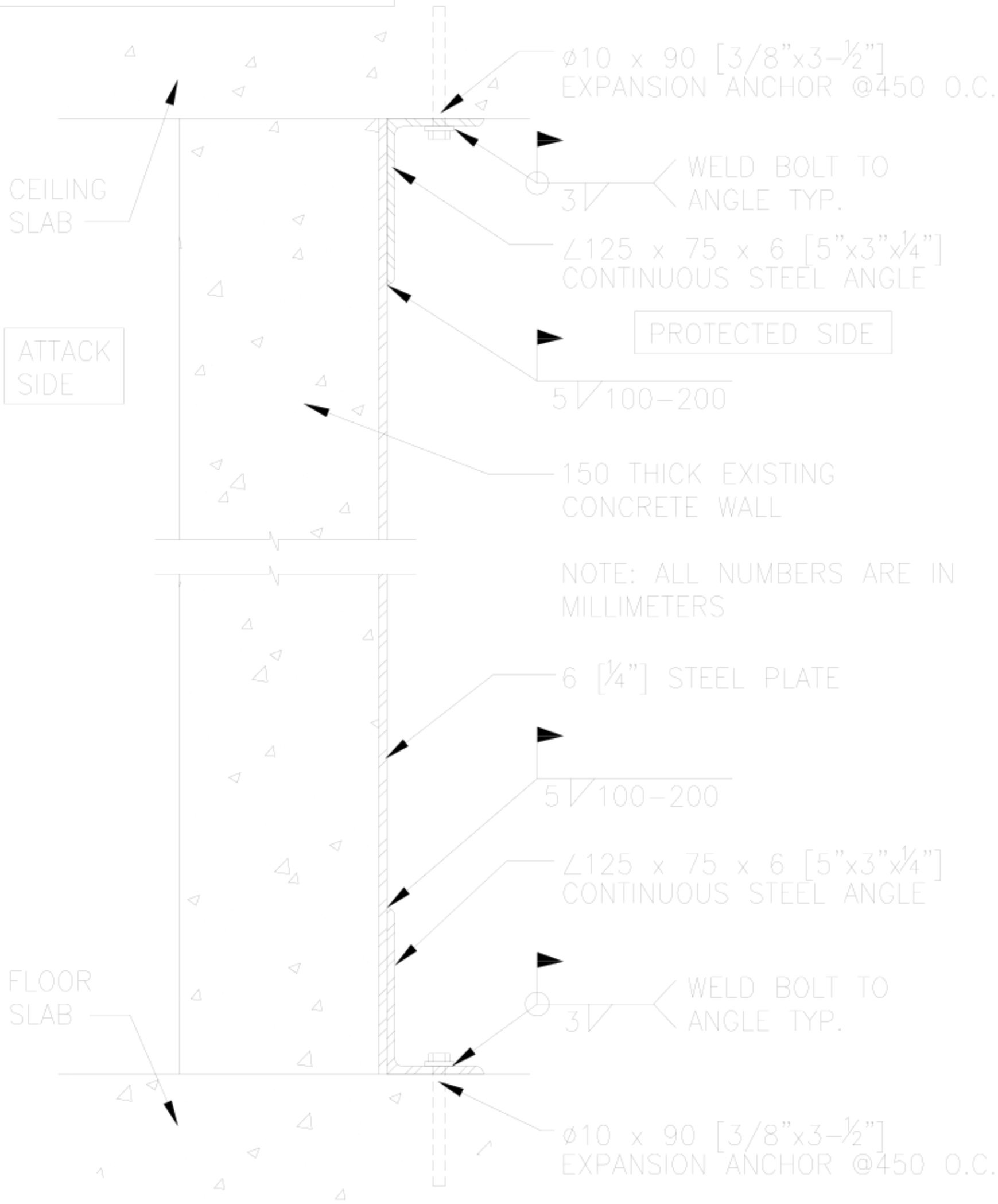


1 SECTION – 60 MINUTE FE/BR WALL

SCALE: 1:5

NOTE: THIS DESIGN IS USED ON RENOVATION PROJECTS WHERE AN EXISTING 150mm CONCRETE WALL REQUIRES UPGRADE TO 60 MINUTE FE/BR PROTECTION

WARNING:
This document is the property of the U.S. Government. Further reproduction and/or distribution is prohibited without the express written permission of: Overseas Buildings Operations, U.S. Department of State, Washington, DC, 20522-0620. Information on this document is not to be altered except with the written approval of the individual whose seal appears hereon.

U.S. Department of State

Office of Overseas Buildings Operations

60 MINUTE FE/BR UPGRADE TO 150mm THICK REINF CONC WALL GPK-60A-DOS-01

OBO/SEB Security Details

| | |
|---|---|
| DWG.TITLE: GPK-60A-DOS-01.dwg | |
| REV: | DATE: |
| REV: | DATE: |
| SCALE: 1:5 | SHEET: 1 OF 1 |
| DRAWN BY: | |
| DATE: January 2009 | UNCLASSIFIED |

MATERIAL SPECIFICATIONS

REINFORCED STEEL:
fy=420 MPa MIN.

CONCRETE:
f'c=30 MPa MIN.

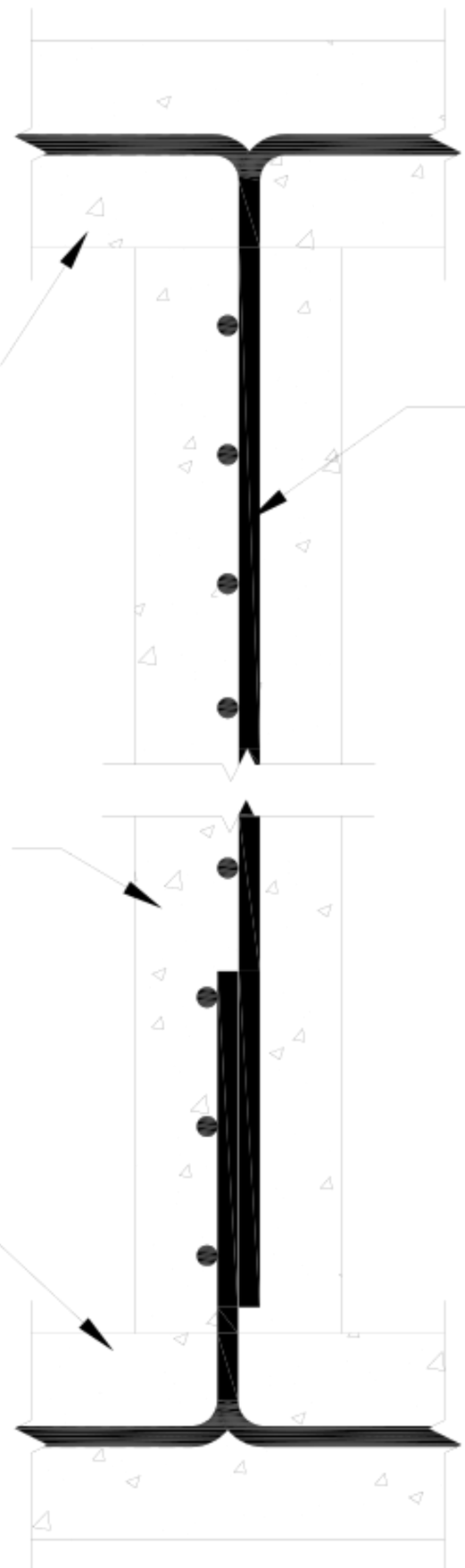


NOTE: ALL NUMBERS AND DIMENSIONS ARE IN MILLIMETERS UNO

1 SECTION – 200mm CONCRETE WALL

SCALE: 1:10

NOTE: THIS WALL DESIGN IS USED AT HARDLINE WALLS REQUIRING 60 MINUTE FE/BR PROTECTION

NOTE: DIFFERENCE BETWEEN THIS WALL AND GPC-15R-DOS-02 IS THICKNESS OF CONCRETE.

WARNING:
This document is the property of the U.S. Government. Further reproduction and/or distribution is prohibited without the express written permission of: Overseas Buildings Operations, U.S. Department of State, Washington, DC, 20522-0620. Information on this document is not to be altered except with the written approval of the individual whose seal appears hereon.

U.S. Department of State
Office of Overseas Buildings Operations

60 MINUTE FE/BR 200mm WALL
GPK-60R-DOS-01

OBO/SEB Security Details

| | |
|---|---|
| DWG.TITLE: GPK-60R-DOS-01.dwg | |
| REV: | DATE: |
| REV: | DATE: |
| SCALE: 1:10 | SHEET: 1 OF 7 |
| DRAWN BY: | |
| DATE: January 2009 | UNCLASSIFIED |

MATERIAL SPECIFICATIONS

REINFORCED STEEL:
fy=420 MPa MIN.

CONCRETE:
f'c=30 MPa MIN.

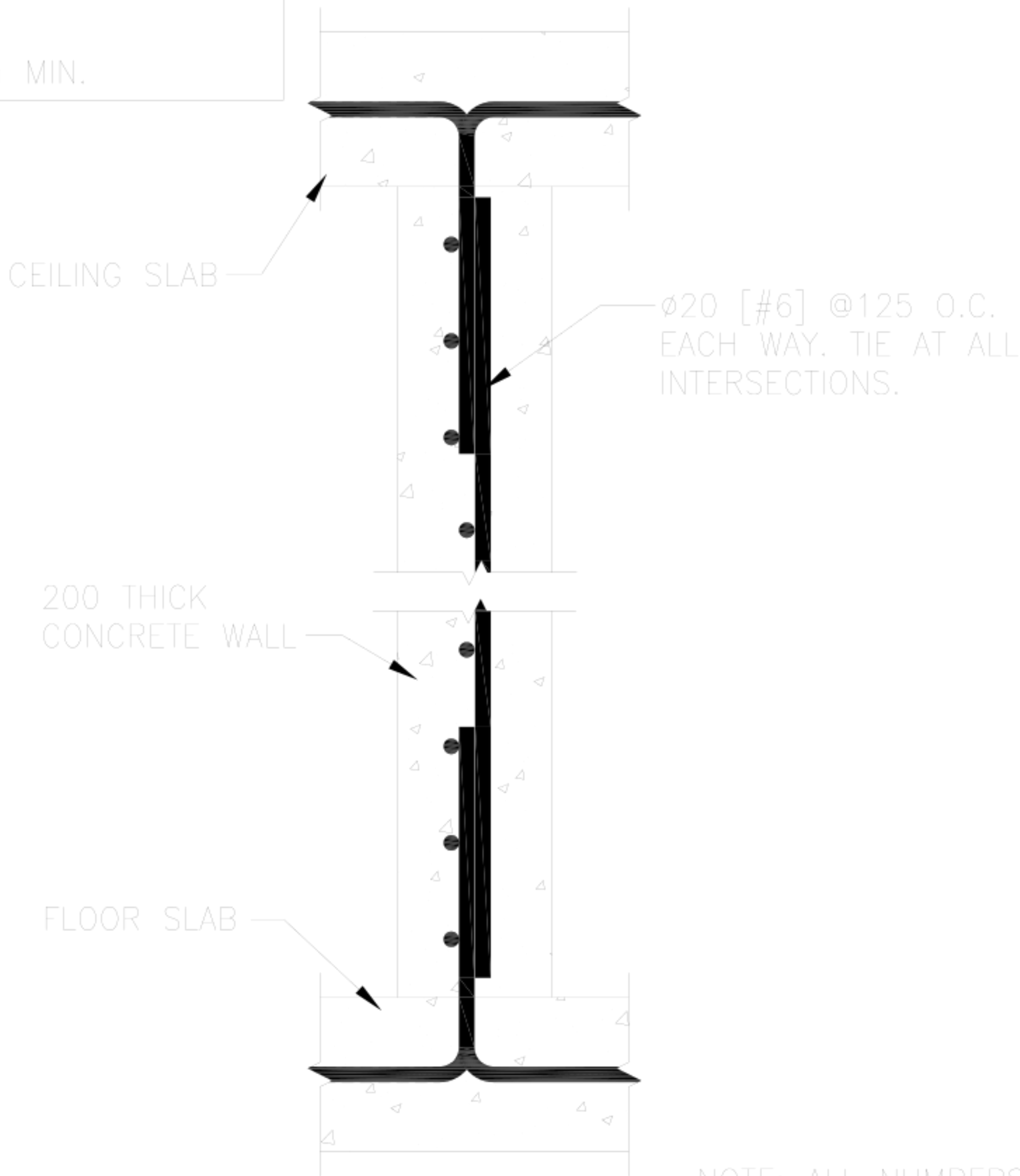


NOTE: ALL NUMBERS AND DIMENSIONS ARE IN MILLIMETERS UNO

2 SECTION – 200mm CONCRETE WALL

SCALE: 1:10

NOTE: THIS WALL DESIGN IS USED AT HARDLINE WALLS REQUIRING 60 MINUTE FE/BR PROTECTION

WARNING:
This document is the property of the U.S. Government. Further reproduction and/or distribution is prohibited without the express written permission of: Overseas Buildings Operations, U.S. Department of State, Washington, DC, 20522-0620. Information on this document is not to be altered except with the written approval of the individual whose seal appears hereon.

U.S. Department of State

Office of Overseas Buildings Operations

60 MINUTE FE/BR 200mm WALL
GPK-60R-DOS-01

OBO/SEB Security Details

| | |
|---|---|
| DWG.TITLE: GPK-60R-DOS-01.dwg | |
| REV: | DATE: |
| REV: | DATE: |
| SCALE: 1:10 | SHEET: 2 OF 7 |
| DRAWN BY: | |
| DATE: January 2009 | UNCLASSIFIED |

MATERIAL SPECIFICATIONS

REINFORCED STEEL:
fy=420 MPa MIN.

CONCRETE:
f'c=30 MPa MIN.

STEEL ANGLES & PLATES:
fy=250 MPa MIN.

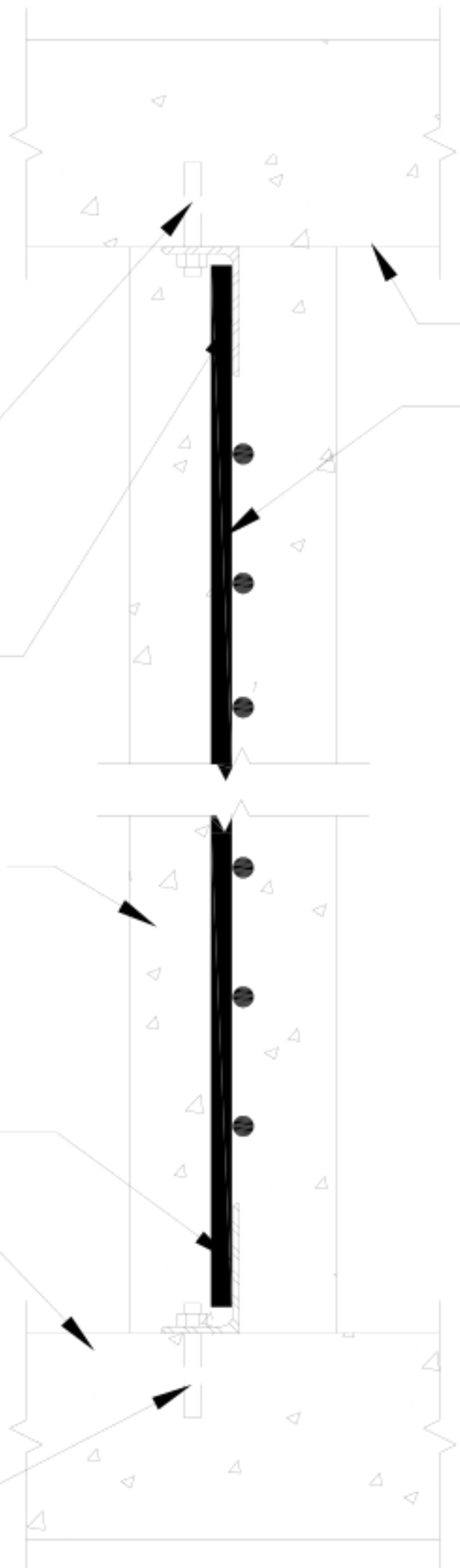


NOTE: ALL NUMBERS AND DIMENSIONS ARE IN MILLIMETERS

## 3 SECTION – 200mm CONCRETE WALL

SCALE: 1:10

(RETROFIT CONDITION)
NOTE: THIS WALL DESIGN IS USED AT HARDLINE WALLS REQUIRING 60 MINUTE FE/BR PROTECTION

WARNING:
This document is the property of the U.S. Government. Further reproduction and/or distribution is prohibited without the express written permission of: Overseas Buildings Operations, U.S. Department of State, Washington, DC, 20522-0620. Information on this document is not to be altered except with the written approval of the individual whose seal appears hereon.

U.S. Department of State
Office of Overseas Buildings Operations

60 MINUTE FE/BR 200mm WALL
GPK-60R-DOS-01

OBO/SEB Security Details

| | |
|---|---|
| DWG.TITLE: GPK-60R-DOS-01.dwg | |
| REV: | DATE: |
| REV: | DATE: |
| SCALE: 1:10 | SHEET: 3 OF 7 |
| DRAWN BY: | |
| DATE: January 2009 | UNCLASSIFIED |

MATERIAL SPECIFICATIONS

REINFORCED STEEL:
fy=420 MPa MIN.

CONCRETE:
f'c=30 MPa MIN.

STEEL ANGLES & PLATES:
fy=250 MPa MIN.

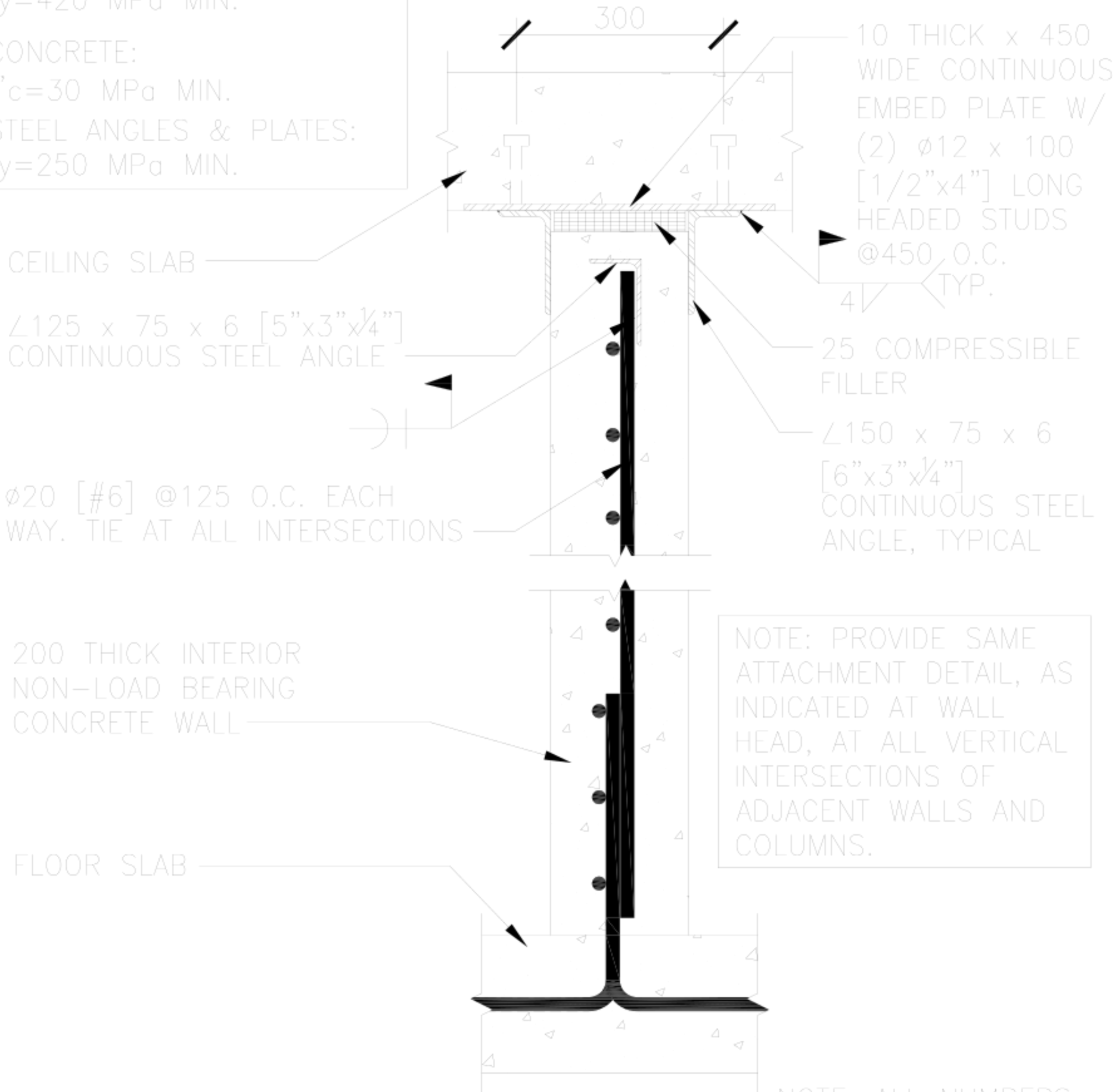


NOTE: PROVIDE SAME ATTACHMENT DETAIL, AS INDICATED AT WALL HEAD, AT ALL VERTICAL INTERSECTIONS OF ADJACENT WALLS AND COLUMNS.

NOTE: ALL NUMBERS AND DIMENSIONS ARE IN MILLIMETERS UNO

## 4 SECTION – 200mm CONCRETE WALL

SCALE: 1:10

(NON-BEARING #1)
NOTE: THIS WALL DESIGN IS USED AT HARDLINE WALLS REQUIRING 60 MINUTE FE/BR PROTECTION

WARNING:
This document is the property of the U.S. Government. Further reproduction and/or distribution is prohibited without the express written permission of: Overseas Buildings Operations, U.S. Department of State, Washington, DC, 20522-0620. Information on this document is not to be altered except with the written approval of the individual whose seal appears hereon.

U.S. Department of State
Office of Overseas Buildings Operations

60 MINUTE FE/BR 200mm WALL
GPK-60R-DOS-01

OBO/SEB Security Details

| | |
|---|---|
| DWG.TITLE: GPK-60R-DOS-01.dwg | |
| REV: | DATE: |
| REV: | DATE: |
| SCALE: 1:10 | SHEET: 4 OF 7 |
| DRAWN BY: | |
| DATE: January 2011 | UNCLASSIFIED |

MATERIAL SPECIFICATIONS

REINFORCED STEEL:
fy=420 MPa (MIN.)(60 KSI)

CONCRETE:
f'c=30 MPa (MIN.)(44 KSI)

STEEL ANGLES:
fy=250 MPa (MIN.)(36 KSI)

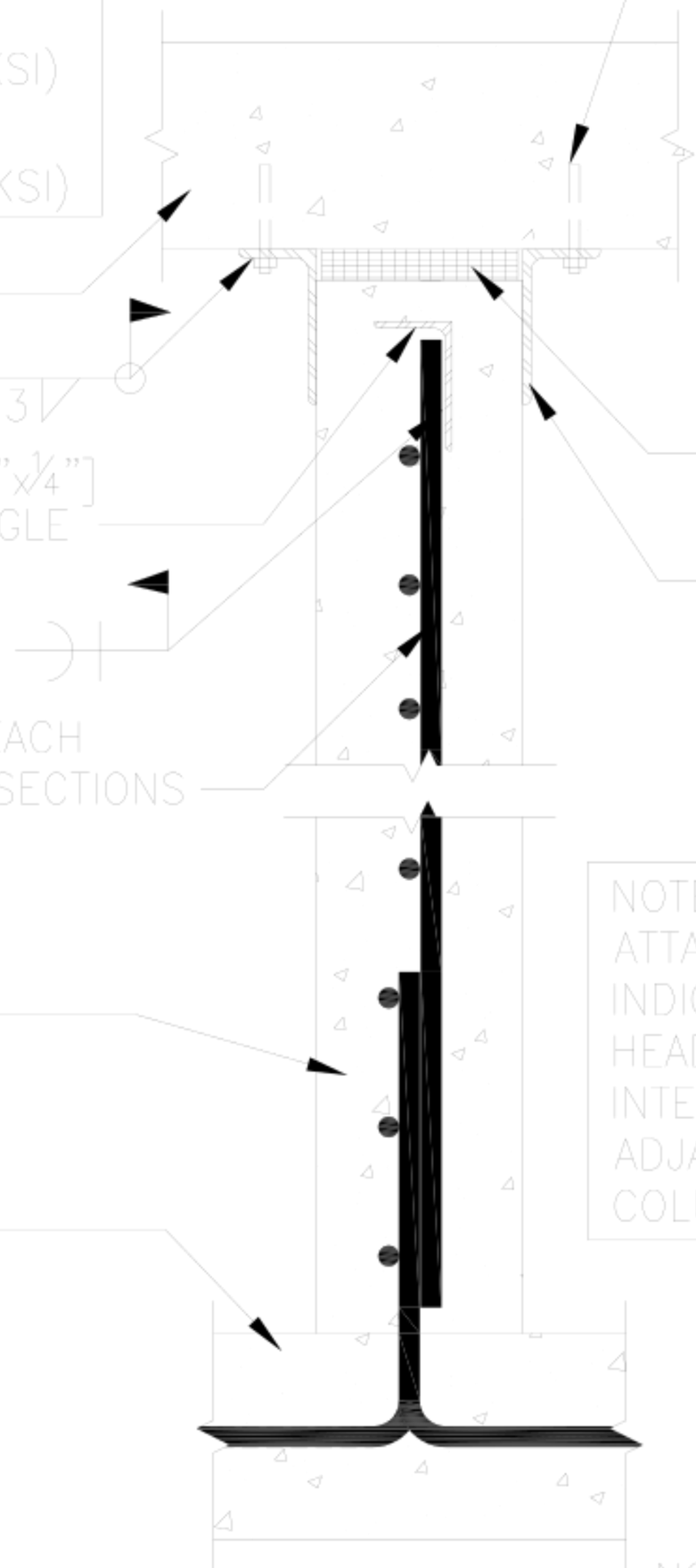


NOTE: PROVIDE SAME ATTACHMENT DETAIL, AS INDICATED AT WALL HEAD, AT ALL VERTICAL INTERSECTIONS OF ADJACENT WALLS AND COLUMNS.

NOTE: ALL NUMBERS AND DIMENSIONS ARE IN MILLIMETERS UNO

## 5 SECTION – 200mm CONCRETE WALL

SCALE: 1:10

(NON-BEARING #2)
NOTE: THIS WALL DESIGN IS USED AT HARDLINE WALLS REQUIRING 60 MINUTE FE/BR PROTECTION

WARNING:
This document is the property of the U.S. Government. Further reproduction and/or distribution is prohibited without the express written permission of: Overseas Buildings Operations, U.S. Department of State, Washington, DC, 20522-0620. Information on this document is not to be altered except with the written approval of the individual whose seal appears hereon.

U.S. Department of State
Office of Overseas Buildings Operations

60 MINUTE FE/BR 200mm WALL
GPK-60R-DOS-01

OBO/SEB Security Details

| | |
|---|---|
| DWG.TITLE: GPK-60R-DOS-01.dwg | |
| REV: | DATE: |
| REV: | DATE: |
| SCALE: 1:10 | SHEET: 5 OF 7 |
| DRAWN BY: | |
| DATE: January 2011 | UNCLASSIFIED |

MATERIAL SPECIFICATIONS

REINFORCED STEEL:
fy=420 MPa MIN.

CONCRETE:
f'c=30 MPa MIN.

STEEL ANGLES & PLATES:
fy=250 MPa MIN.

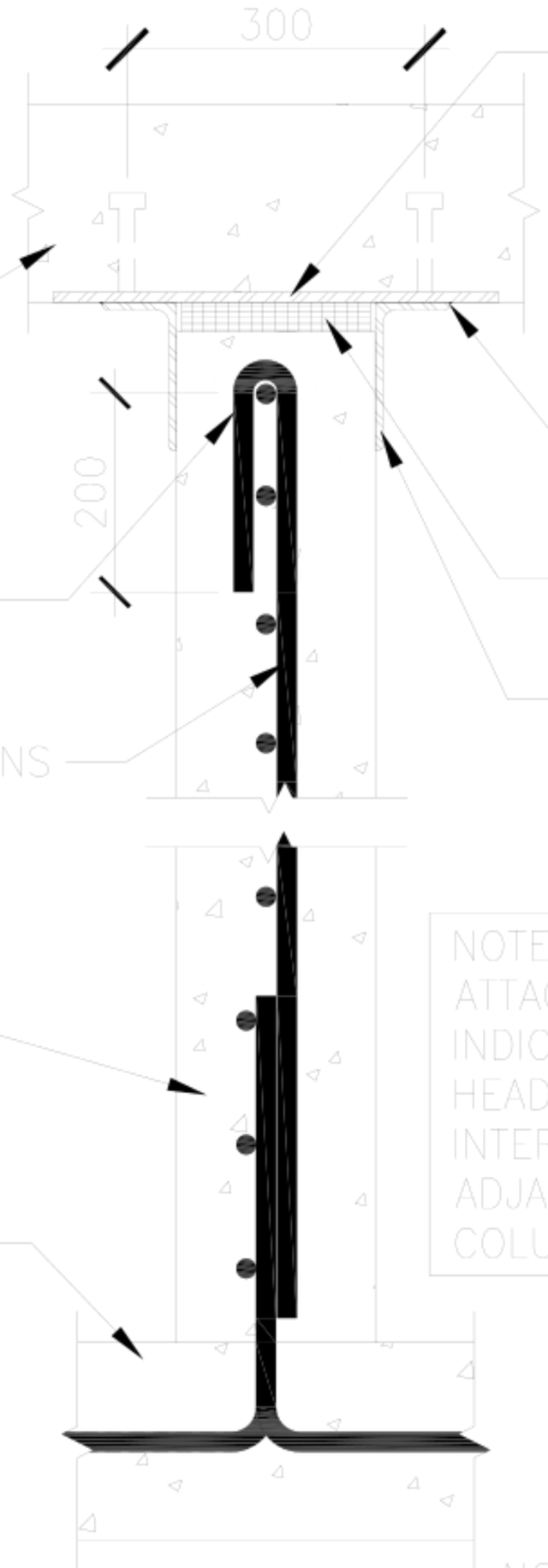


10 THICK x 450 WIDE CONTINUOUS EMBED PLATE W/ (2) ø16 x 100 [5/8"x4"] LONG HEADED STUDS @450 O.C.

CEILING SLAB

4 TYP.

180 DEGREE HOOK AT EACH VERTICAL BAR. WRAP BAR AT OBTUSE ANGLE TO HORIZONTAL BAR.

25 COMPRESSIBLE FILLER

ø20 [#6] @125 O.C. EACH WAY. TIE AT ALL INTERSECTIONS

∠150 x 75 x 6 [6"x3"x¼"] CONTINUOUS STEEL ANGLE, TYPICAL

200 THICK INTERIOR NON-LOAD BEARING CONCRETE WALL

NOTE: PROVIDE SAME ATTACHMENT DETAIL, AS INDICATED AT WALL HEAD, AT ALL VERTICAL INTERSECTIONS OF ADJACENT WALLS AND COLUMNS.

FLOOR SLAB

NOTE: ALL NUMBERS AND DIMENSIONS ARE IN MILLIMETERS UNO

## 6 SECTION – 200mm CONCRETE WALL

SCALE: 1:10

(NON-BEARING #1)
NOTE: THIS WALL DESIGN IS USED AT HARDLINE WALLS REQUIRING 60 MINUTE FE/BR PROTECTION

WARNING:
This document is the property of the U.S. Government. Further reproduction and/or distribution is prohibited without the express written permission of: Overseas Buildings Operations, U.S. Department of State, Washington, DC, 20522-0620. Information on this document is not to be altered except with the written approval of the individual whose seal appears hereon.

U.S. Department of State
Office of Overseas Buildings Operations

60 MINUTE FE/BR 200mm WALL
GPK-60R-DOS-01

OBO/SEB Security Details

| | |
|---|---|
| DWG.TITLE: GPK-60R-DOS-01.dwg | |
| REV: | DATE: |
| REV: | DATE: |
| SCALE: 1:10 | SHEET: 6 OF 7 |
| DRAWN BY: | |
| DATE: January 2011 | UNCLASSIFIED |

MATERIAL SPECIFICATIONS

REINFORCED STEEL:
fy=420 MPa MIN.

CONCRETE:
f'c=30 MPa MIN.

STEEL ANGLES:
fy=250 MPa MIN.

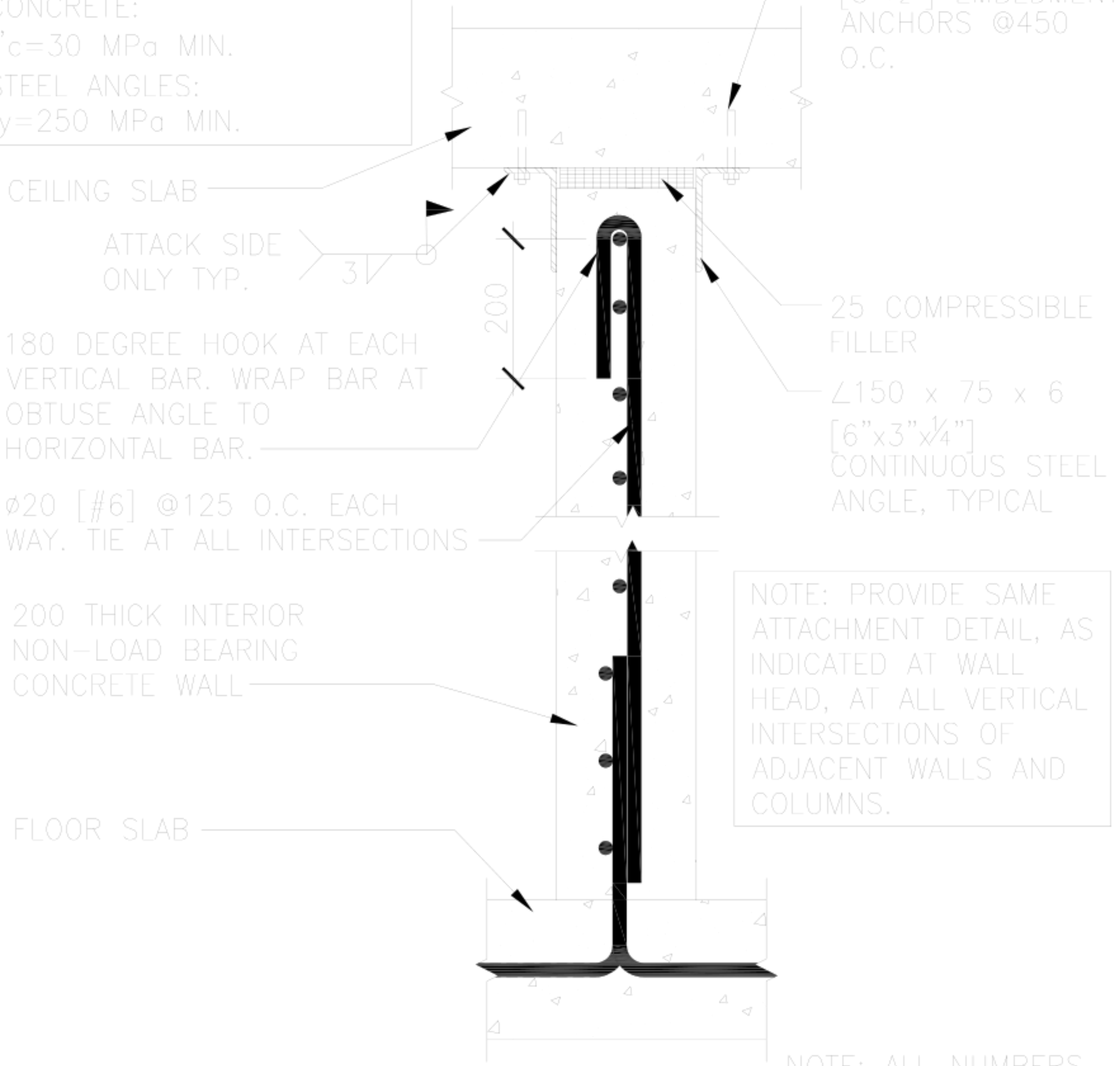


NOTE: PROVIDE SAME ATTACHMENT DETAIL, AS INDICATED AT WALL HEAD, AT ALL VERTICAL INTERSECTIONS OF ADJACENT WALLS AND COLUMNS.

NOTE: ALL NUMBERS AND DIMENSIONS ARE IN MILLIMETERS UNO

## 7 SECTION – 200mm CONCRETE WALL

SCALE: 1:10

(NON-BEARING #2)
NOTE: THIS WALL DESIGN IS USED AT HARDLINE WALLS REQUIRING 60 MINUTE FE/BR PROTECTION

WARNING:
This document is the property of the U.S. Government. Further reproduction and/or distribution is prohibited without the express written permission of: Overseas Buildings Operations, U.S. Department of State, Washington, DC, 20522-0620. Information on this document is not to be altered except with the written approval of the individual whose seal appears hereon.

U.S. Department of State
Office of Overseas Buildings Operations

60 MINUTE FE/BR 200mm WALL
GPK-60R-DOS-01

OBO/SEB Security Details

| | |
|---|---|
| DWG.TITLE: GPK-60R-DOS-01.dwg | |
| REV: | DATE: |
| REV: | DATE: |
| SCALE: 1:10 | SHEET: 7 OF 7 |
| DRAWN BY: | |
| DATE: January 2011 | UNCLASSIFIED |

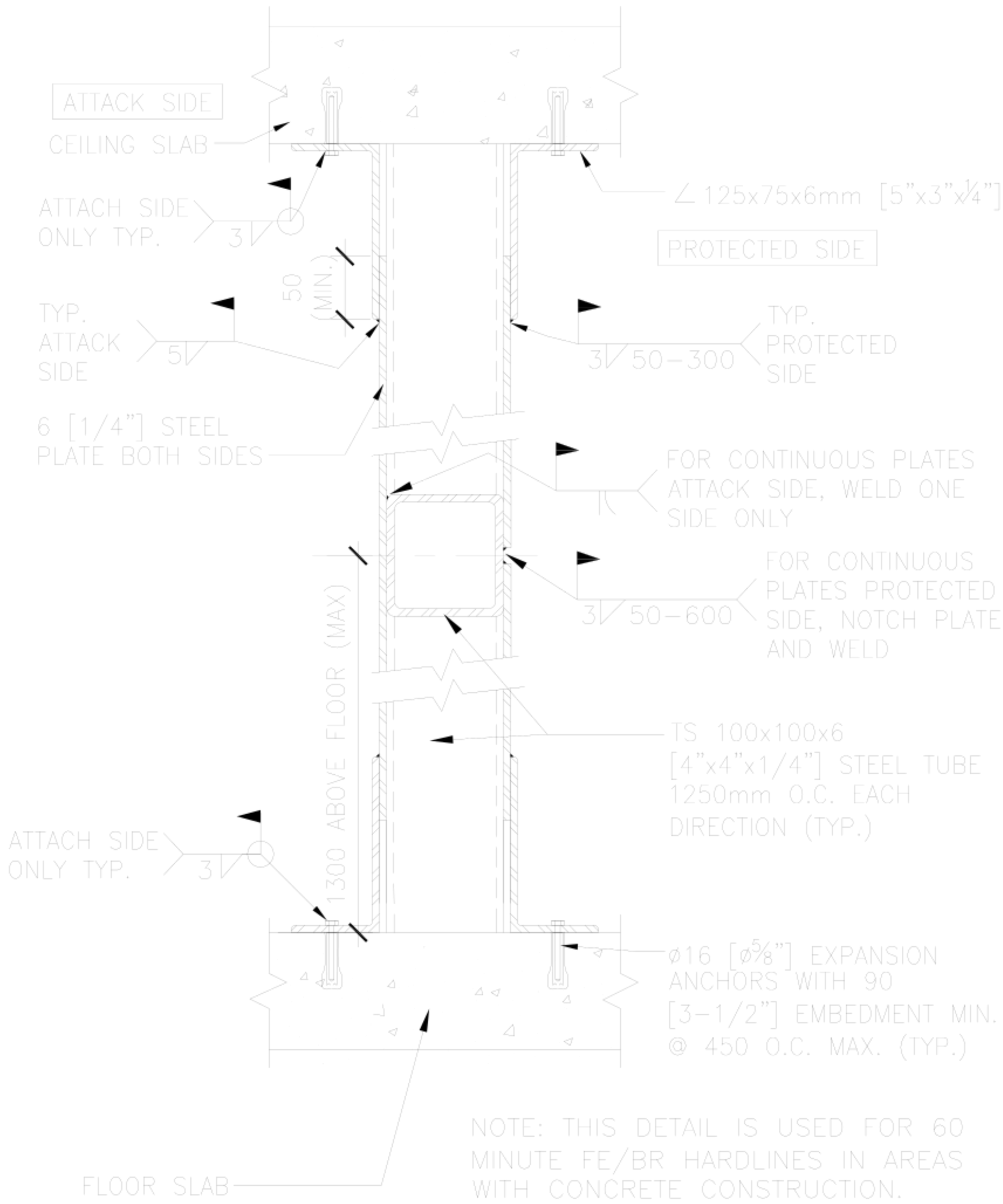


NOTE: THIS DETAIL IS USED FOR 60 MINUTE FE/BR HARDLINES IN AREAS WITH CONCRETE CONSTRUCTION.

## 1 60 MINUTE FE/BR HARDLINE WALL

SCALE: N.T.S.

WARNING:
This document is the property of the U.S. Government. Further reproduction and/or distribution is prohibited without the express written permission of: Overseas Buildings Operations, U.S. Department of State, Washington, DC, 20522–0620. Information on this document is not to be altered except with the written approval of the individual whose seal appears hereon.

U.S. Department of State
Office of Overseas Buildings Operations

60 MINUTE FE/BR HARDLINE WALL
DUAL STEEL PLATE
GPS–60R–DOS–01

OBO/SEB Security Details

| | |
|---|---|
| DWG.TITLE: GPS–60R–DOS–01.dwg | |
| REV: | DATE: |
| REV: | DATE: |
| SCALE: N.T.S. | SHEET: 1 OF 4 |
| DRAWN BY: | |
| DATE: January 2009 | UNCLASSIFIED |

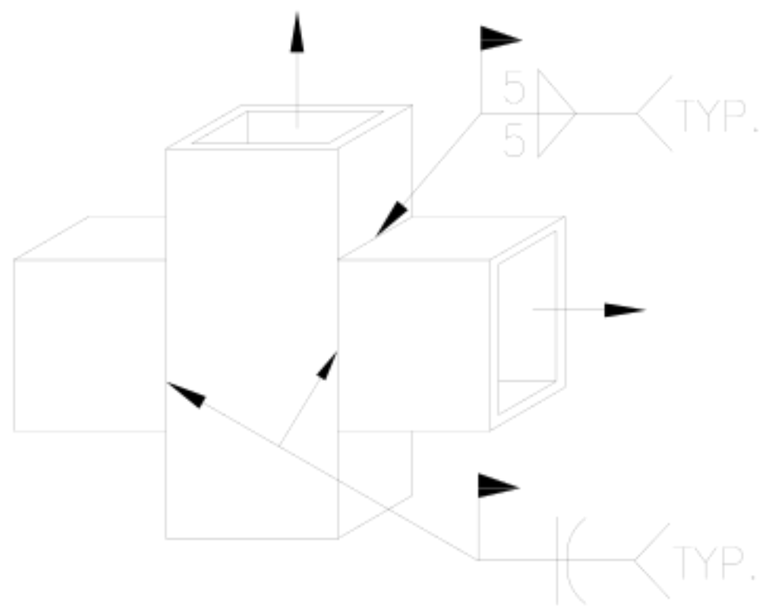


A

ISOMETRIC VIEW OF JOINT

SCALE: N.T.S.

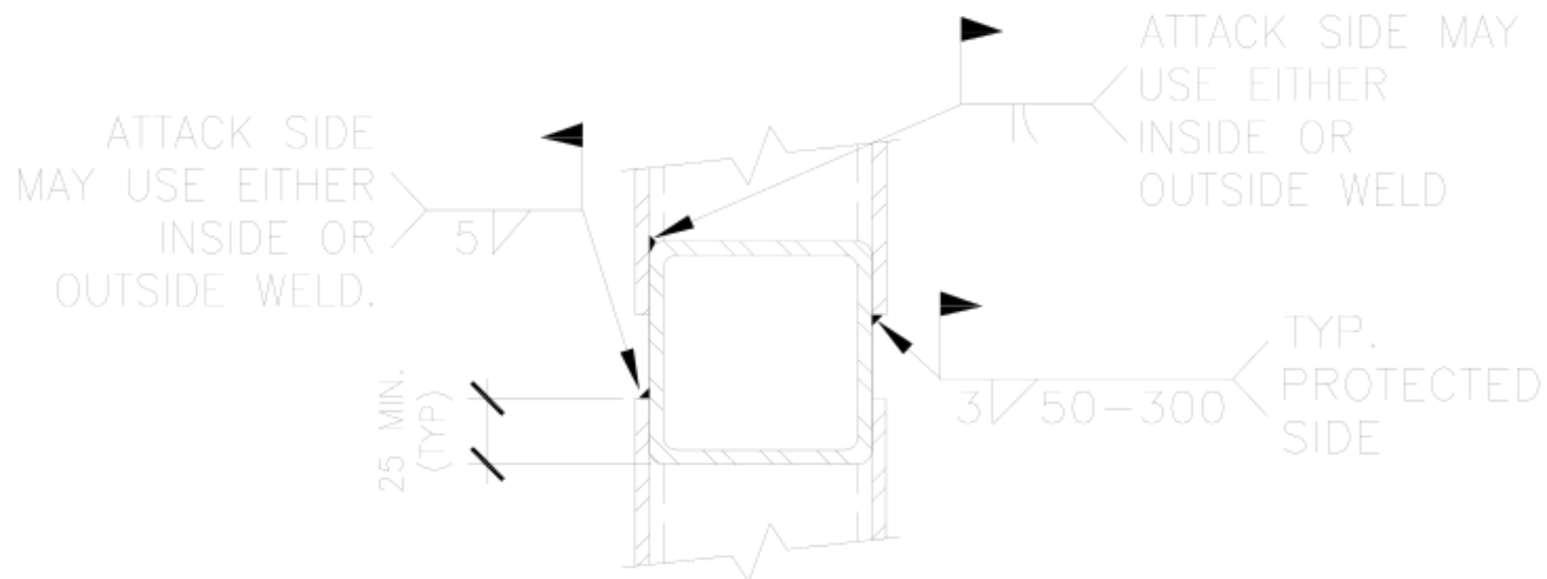


B

DETAIL AT EDGE OF PLATES

SCALE: N.T.S.

NOTES:

1. ANCHORAGE SHOWN IS FOR CONCRETE ONLY. FOR OTHER SUBSTRATES, REFER TO OBO FOR GUIDANCE.
2. ARCHITECTURAL FINISH NOT SHOWN.
3. WELDS SHOWN ARE FOR 60 MINUTE FE/BR. STEEL PLATES SHALL BE CONTINUOUSLY WELDED TO THE TUBE FRAME OVER THE ENTIRE PERIMETER ON THE ATTACK SIDE.
4. WELDING PER AWS D1.1 FLARE-BEVEL-GROOVE WELDS SHALL HAVE JOINTS WELDED FLUSH. WELDING PROCEDURES AND SEQUENCING SHALL MINIMIZE DISTORTION.
5. ELECTRODES E7018. ELECTRODES SHALL BE PURCHASED IN HERMETICALLY SEALED CONTAINERS OR SHALL BE DRIED FOR AT LEAST 2 HOURS BETWEEN 230° C AND 260° C BEFORE THEY ARE USED.

WARNING:
This document is the property of the U.S. Government. Further reproduction and/or distribution is prohibited without the express written permission of: Overseas Buildings Operations, U.S. Department of State, Washington, DC, 20522-0620. Information on this document is not to be altered except with the written approval of the individual whose seal appears hereon.

U.S. Department of State

Office of Overseas Buildings Operations

60 MINUTE FE/BR HARDLINE WALL
DUAL STEEL PLATE
GPS-60R-DOS-01

OBO/SEB Security Details

| | |
|---|---|
| DWG.TITLE: GPS-60R-DOS-01.dwg | |
| REV: | DATE: |
| REV: | DATE: |
| SCALE: N.T.S. | SHEET: 2 OF 4 |
| DRAWN BY: | |
| DATE: January 2009 | UNCLASSIFIED |

MATERIAL SPECIFICATIONS

STEEL PLATE AND STEEL ANGLES: 250 MPa (36 KSI)

STEEL TUBE: ASTM A500 GRADE B OR C OR EQUIVALENT fy=320 MPa (47 KSI)

HIGH HARDNESS STEEL: ASTRALLOY BP 6:33

OPTION: INSTEAD OF TWO 6mm THICK STEEL PLATES, HIGH HARDNESS STEEL MAY BE USED WITH 6mm [1/4"] ON THE ATTACK SIDE AND 3mm [1/8"] ON THE PROTECTED SIDE.

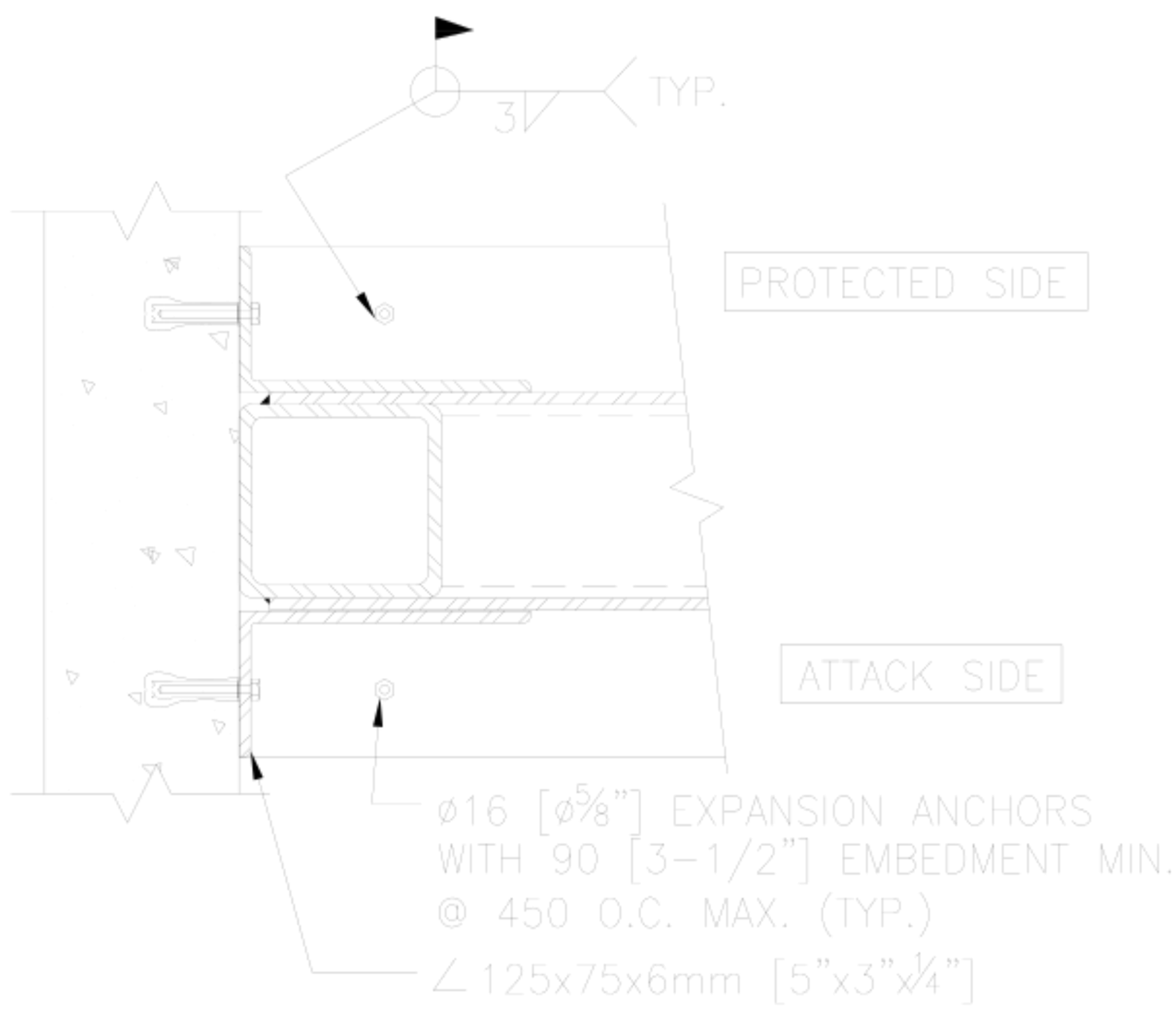


C

DETAIL AT CONNECTION TO WALL

SCALE: N.T.S.

WARNING:
This document is the property of the U.S. Government. Further reproduction and/or distribution is prohibited without the express written permission of: Overseas Buildings Operations, U.S. Department of State, Washington, DC, 20522-0620. Information on this document is not to be altered except with the written approval of the individual whose seal appears hereon.

U.S. Department of State

Office of Overseas Buildings Operations

60 MINUTE FE/BR HARDLINE WALL
DUAL STEEL PLATE
GPS-60R-DOS-01

OBO/SEB Security Details

| | |
|---|---|
| DWG.TITLE: GPS-60R-DOS-01.dwg | |
| REV: | DATE: |
| REV: | DATE: |
| SCALE: N.T.S. | SHEET: 3 OF 4 |
| DRAWN BY: | |
| DATE: January 2009 | UNCLASSIFIED |

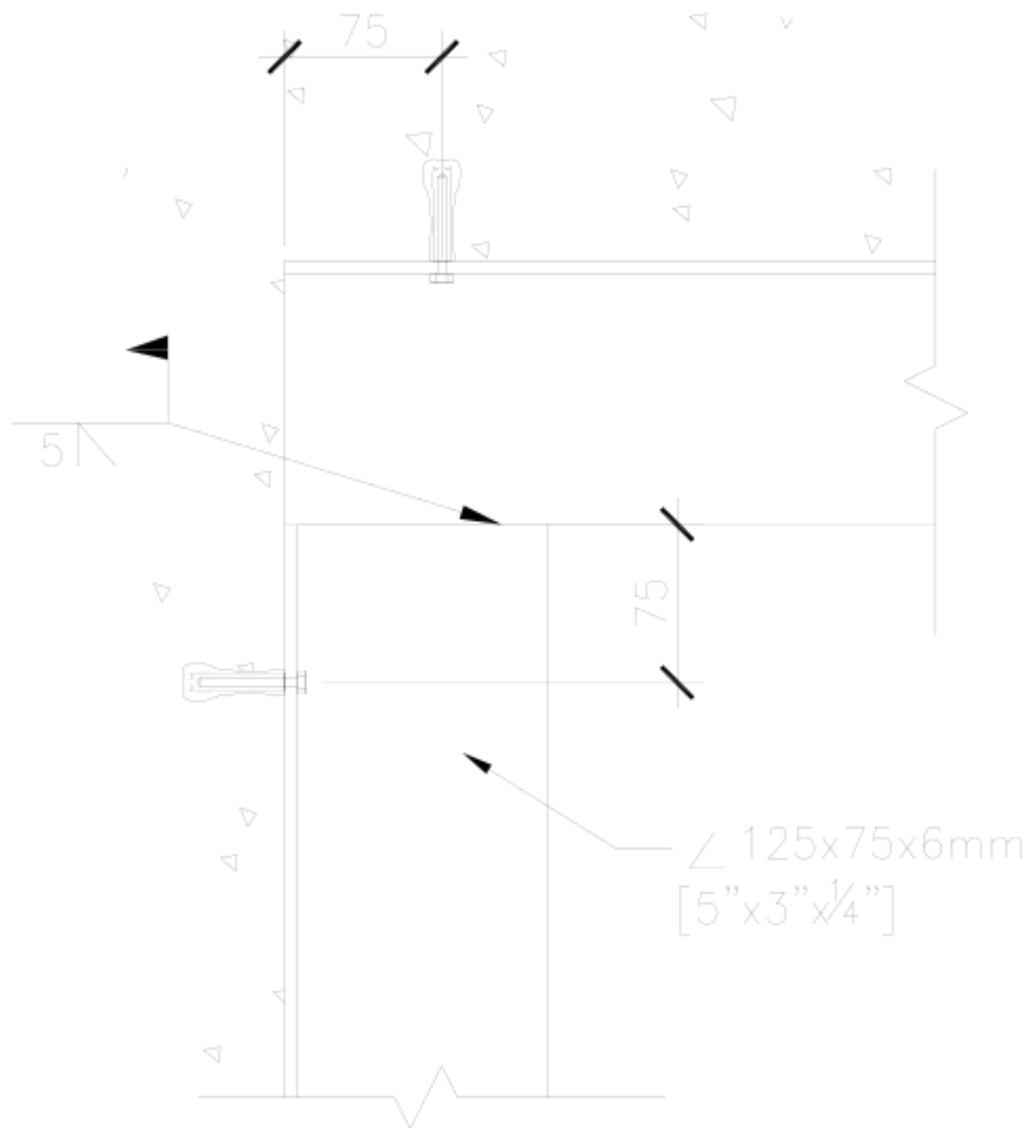


D

DETAIL AT CORNER OF
WALL ANGLE CONNECTION

SCALE: N.T.S.

WARNING:
This document is the property of the U.S. Government. Further reproduction and/or distribution is prohibited without the express written permission of: Overseas Buildings Operations, U.S. Department of State, Washington, DC, 20522-0620. Information on this document is not to be altered except with the written approval of the individual whose seal appears hereon.

U.S. Department of State

Office of
Overseas Buildings Operations

60 MINUTE FE/BR HARDLINE WALL
DUAL STEEL PLATE
GPS-60R-DOS-01

OBO/SEB Security Details

| | |
|---|---|
| DWG.TITLE: GPS-60R-DOS-01.dwg | |
| REV: | DATE: |
| REV: | DATE: |
| SCALE: N.T.S. | SHEET: 4 OF 4 |
| DRAWN BY: | |
| DATE: January 2009 | UNCLASSIFIED |

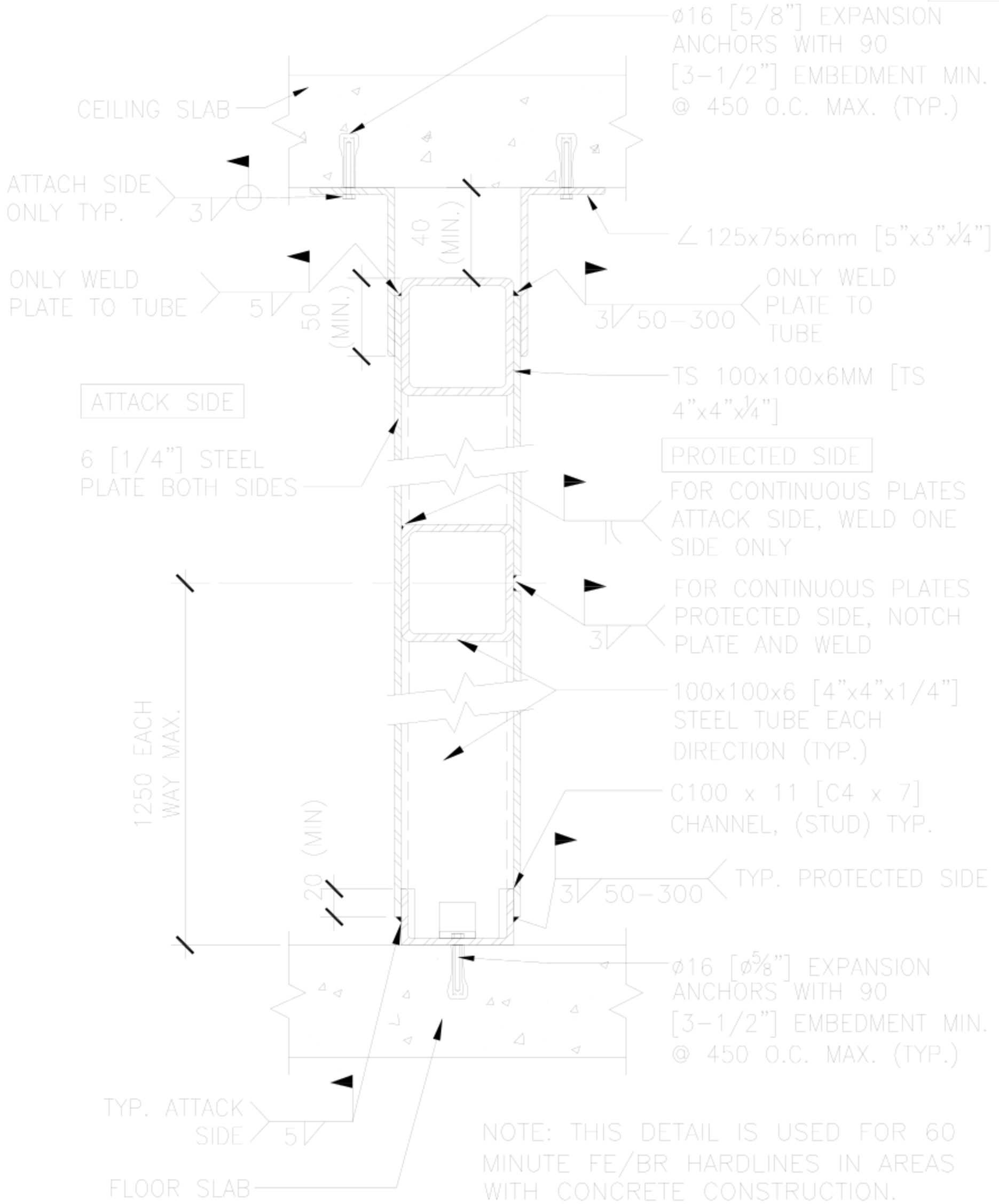


NOTE: THIS DETAIL IS USED FOR 60 MINUTE FE/BR HARDLINES IN AREAS WITH CONCRETE CONSTRUCTION.

## 1 60 MINUTE FE/BR HARDLINE WALL

SCALE: N.T.S.

WARNING:
This document is the property of the U.S. Government. Further reproduction and/or distribution is prohibited without the express written permission of: Overseas Buildings Operations, U.S. Department of State, Washington, DC, 20522-0620. Information on this document is not to be altered except with the written approval of the individual whose seal appears hereon.

U.S. Department of State
Office of Overseas Buildings Operations

60 MINUTE FE/BR HARDLINE WALL
ALTERNATE DUAL STEEL PLATE
GPS-60R-DOS-02

OBO/SEB Security Details

| | |
|---|---|
| DWG.TITLE: GPS-60R-DOS-02.dwg | |
| REV: | DATE: |
| REV: | DATE: |
| SCALE: N.T.S. | SHEET: 1 OF 4 |
| DRAWN BY: | |
| DATE: January 2009 | UNCLASSIFIED |

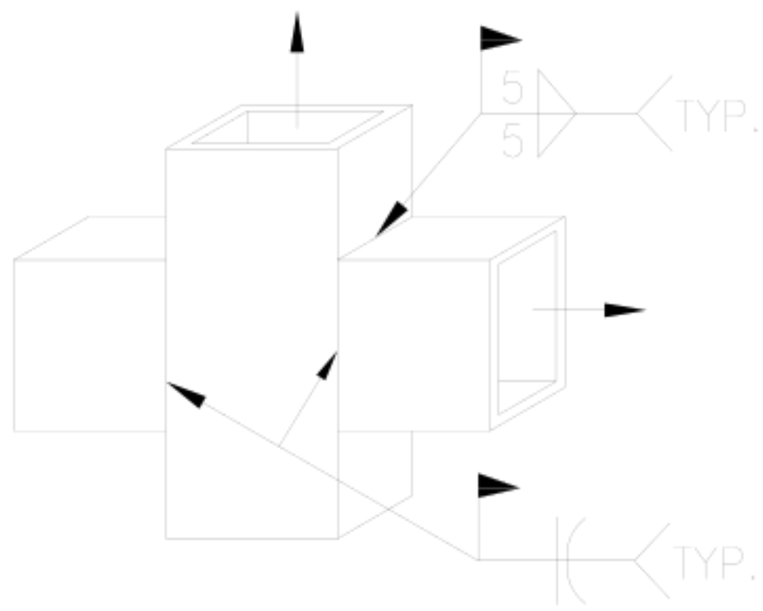


A

ISOMETRIC VIEW OF JOINT

SCALE: N.T.S.

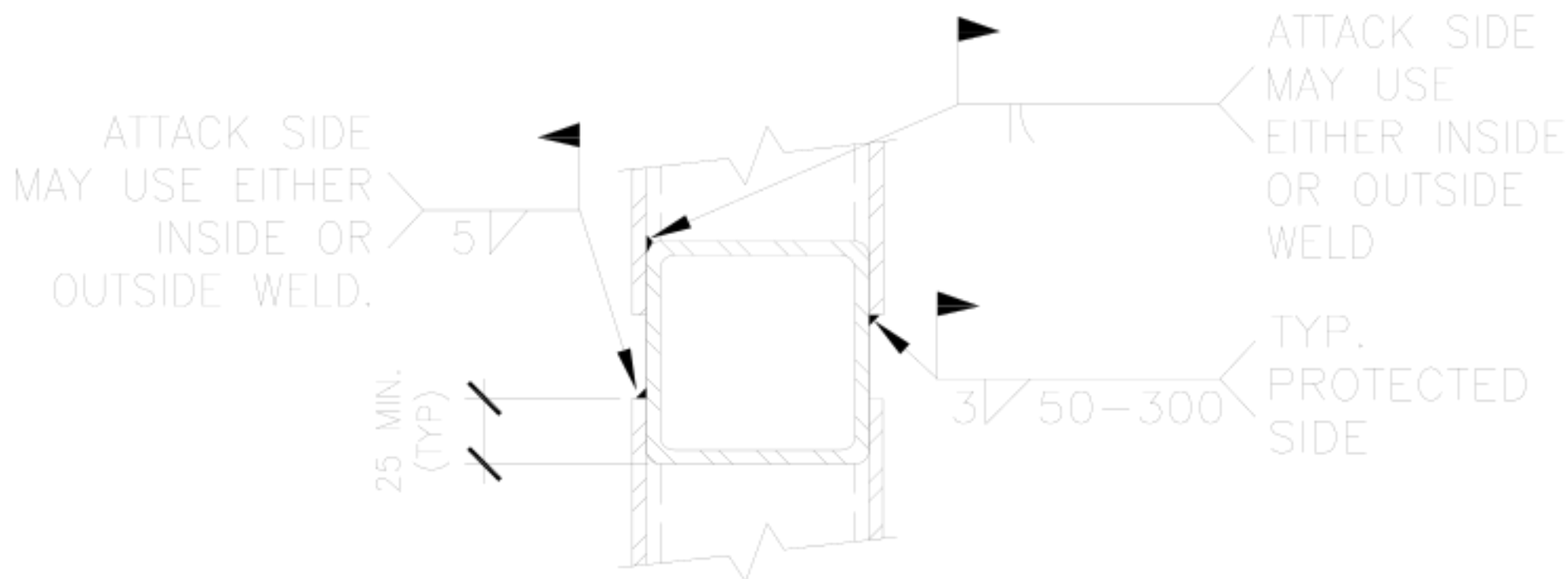


B

DETAIL AT EDGE OF PLATES

SCALE: N.T.S.

NOTES:

1. ANCHORAGE SHOWN IS FOR CONCRETE ONLY. FOR OTHER SUBSTRATES, REFER TO OBO FOR GUIDANCE.
2. ARCHITECTURAL FINISH NOT SHOWN.
3. WELDS SHOWN ARE FOR 60 MINUTE FE/BR. STEEL PLATES SHALL BE CONTINUOUSLY WELDED TO THE TUBE FRAME OVER THE ENTIRE PERIMETER ON THE ATTACK SIDE.
4. WELDING PER AWS D1.1 FLARE-BEVEL-GROOVE WELDS SHALL HAVE JOINTS WELDED FLUSH. WELDING PROCEDURES AND SEQUENCING SHALL MINIMIZE DISTORTION.
5. ELECTRODES E7018. ELECTRODES SHALL BE PURCHASED IN HERMETICALLY SEALED CONTAINERS OR SHALL BE DRIED FOR AT LEAST 2 HOURS BETWEEN 230° C AND 260° C BEFORE THEY ARE USED.

WARNING:
This document is the property of the U.S. Government. Further reproduction and/or distribution is prohibited without the express written permission of: Overseas Buildings Operations, U.S. Department of State, Washington, DC, 20522-0620. Information on this document is not to be altered except with the written approval of the individual whose seal appears hereon.

U.S. Department of State

Office of Overseas Buildings Operations

60 MINUTE FE/BR HARDLINE WALL
ALTERNATE DUAL STEEL PLATE
GPS-60R-DOS-02

OBO/SEB Security Details

| | |
|---|---|
| DWG.TITLE: GPS-60R-DOS-02.dwg | |
| REV: | DATE: |
| REV: | DATE: |
| SCALE: N.T.S. | SHEET: 2 OF 4 |
| DRAWN BY: | |
| DATE: January 2009 | UNCLASSIFIED |

MATERIAL SPECIFICATIONS

STEEL PLATE AND STEEL ANGLES: 250 MPa (36 KSI)

STEEL TUBE: ASTM A500 GRADE B OR C OR EQUIVALENT fy=320 MPa (47 KSI)

HIGH HARDNESS STEEL: ASTRALLOY BP 6:33

OPTION: INSTEAD OF TWO 6mm THICK STEEL PLATES, HIGH HARDNESS STEEL MAY BE USED WITH 6mm [1/4"] ON THE ATTACK SIDE AND 3mm [1/8"] ON THE PROTECTED SIDE.

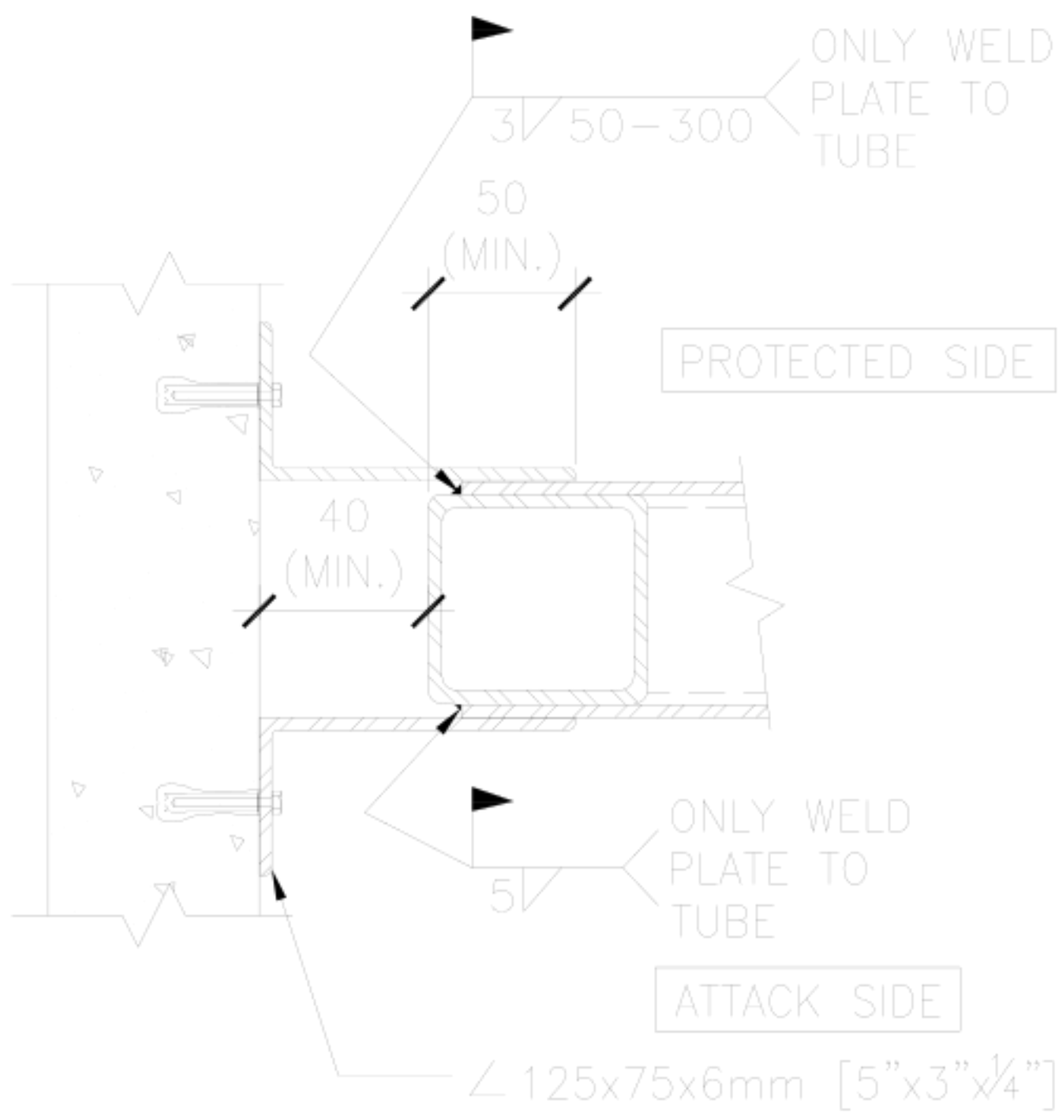


C

DETAIL AT CONNECTION TO WALL

SCALE: N.T.S.

WARNING:
This document is the property of the U.S. Government. Further reproduction and/or distribution is prohibited without the express written permission of: Overseas Buildings Operations, U.S. Department of State, Washington, DC, 20522-0620. Information on this document is not to be altered except with the written approval of the individual whose seal appears hereon.

U.S. Department of State

Office of Overseas Buildings Operations

60 MINUTE FE/BR HARDLINE WALL ALTERNATE DUAL STEEL PLATE GPS-60R-DOS-02

OBO/SEB Security Details

| | |
|---|---|
| DWG.TITLE: GPS-60R-DOS-02.dwg | |
| REV: | DATE: |
| REV: | DATE: |
| SCALE: N.T.S. | SHEET: 3 OF 4 |
| DRAWN BY: | |
| DATE: January 2009 | UNCLASSIFIED |

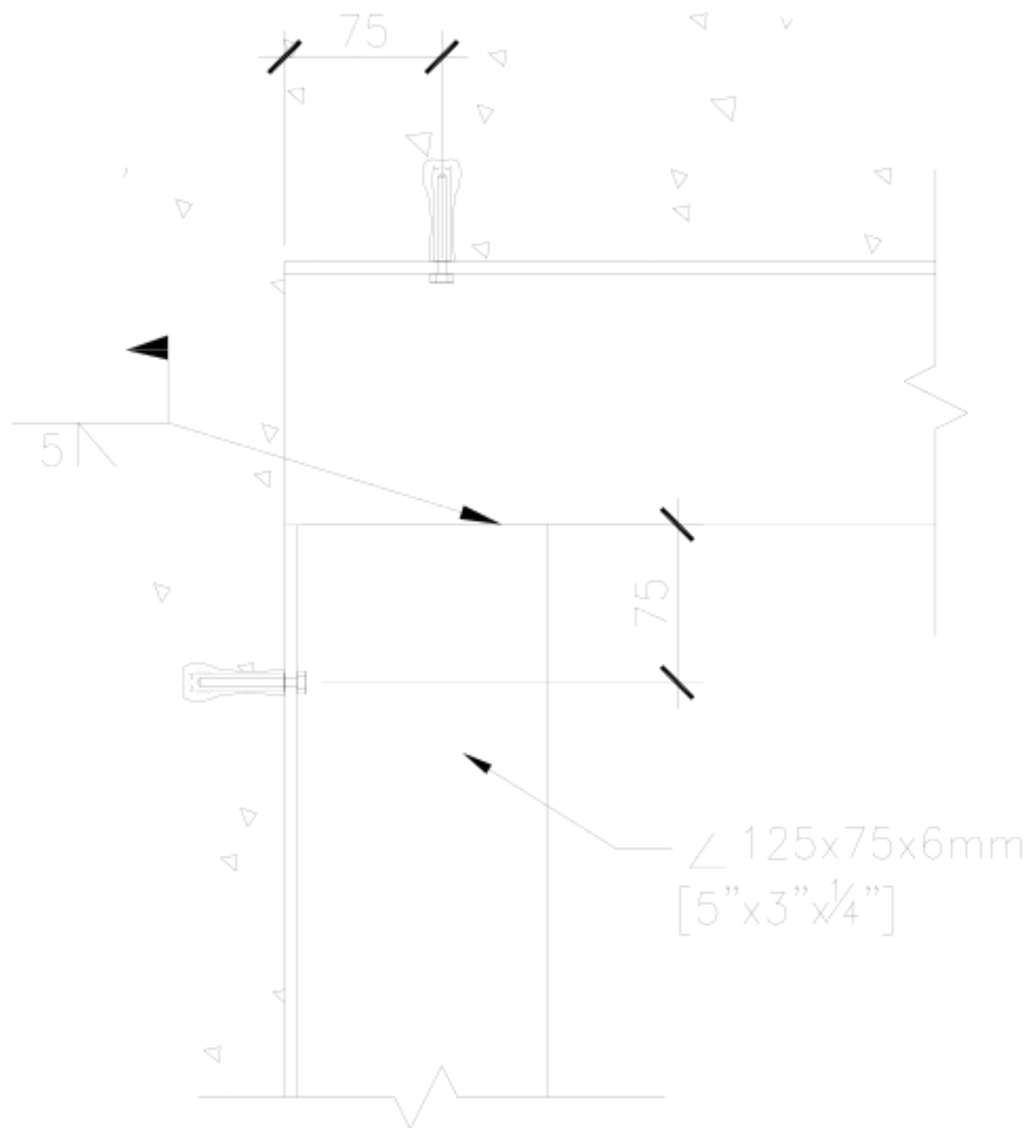


D

DETAIL AT CORNER OF
WALL ANGLE CONNECTION

SCALE: N.T.S.

WARNING:
This document is the property of the U.S. Government. Further reproduction and/or distribution is prohibited without the express written permission of: Overseas Buildings Operations, U.S. Department of State, Washington, DC, 20522-0620. Information on this document is not to be altered except with the written approval of the individual whose seal appears hereon.

U.S. Department of State

Office of
Overseas Buildings Operations

60 MINUTE FE/BR HARDLINE WALL
ALTERNATE DUAL STEEL PLATE
GPS-60R-DOS-02

OBO/SEB Security Details

| | |
|---|---|
| DWG.TITLE: GPS-60R-DOS-02.dwg | |
| REV: | DATE: |
| REV: | DATE: |
| SCALE: N.T.S. | SHEET: 4 OF 4 |
| DRAWN BY: | |
| DATE: January 2009 | UNCLASSIFIED |

MATERIAL SPECIFICATIONS

STEEL PLATE AND STEEL ANGLES: 250 MPa (36 KSI)

STEEL TUBE: ASTM A500 GRADE B OR C OR EQUIVALENT fy=320 MPa (47 KSI)

HIGH HARDNESS STEEL: ASTRALLOY BP 6:33

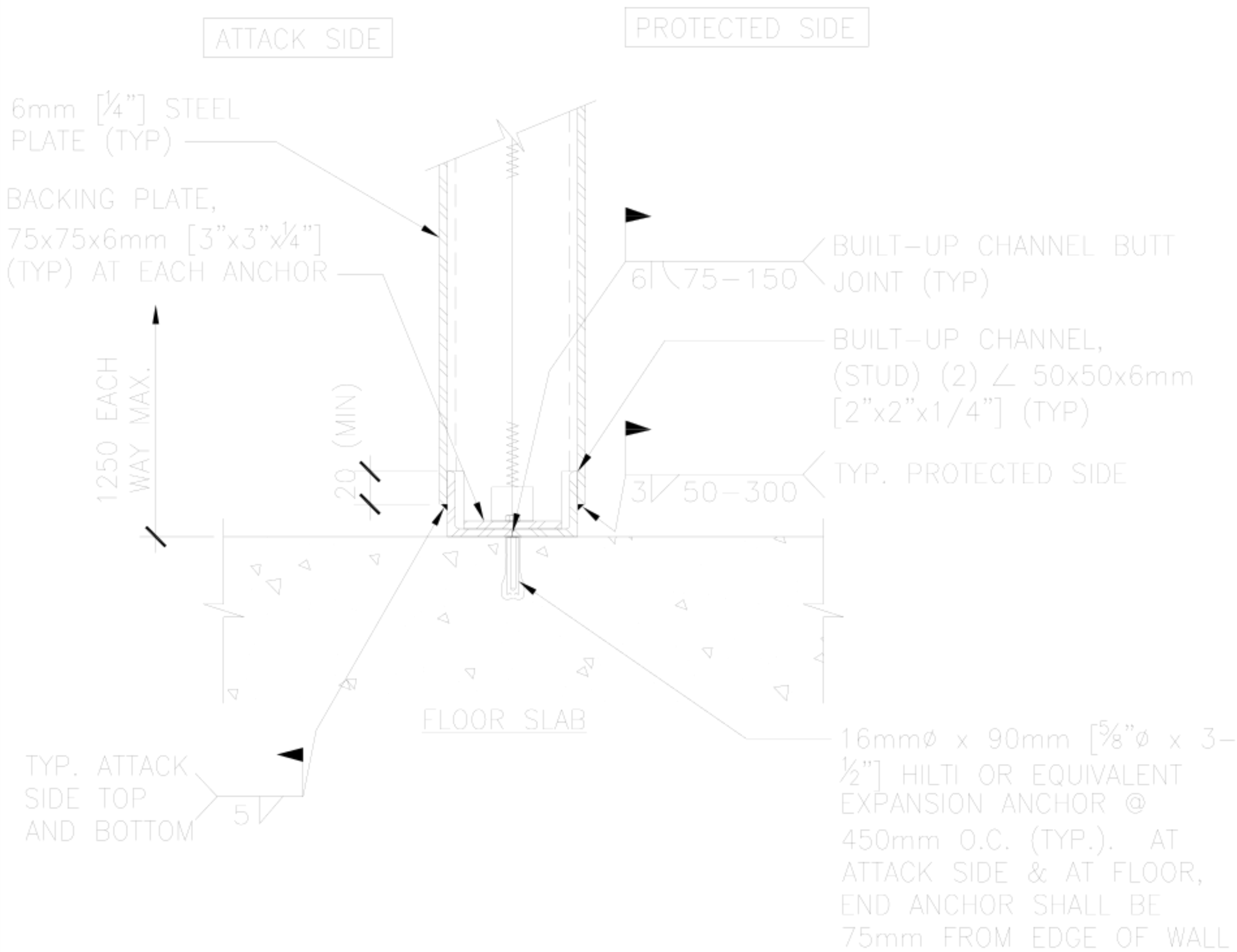


SECTION OF BUILT-UP CHANNEL

1 . 60 MINUTE FE/BR HARDLINE WALL

SCALE: N.T.S.

NOTE: THIS DETAIL IS USED FOR 60 MINUTE FE/BR HARDLINES IN AREAS WITH CONCRETE CONSTRUCTION.

WARNING:
This document is the property of the U.S. Government. Further reproduction and/or distribution is prohibited without the express written permission of: Overseas Buildings Operations, U.S. Department of State, Washington, DC, 20522-0620. Information on this document is not to be altered except with the written approval of the individual whose seal appears hereon.

U.S. Department of State

Office of Overseas Buildings Operations

60 MINUTE FE/BR HARDLINE WALL
DUAL STEEL PLATE
GPS-60R-DOS-03

OBO/SEB Security Details

| | |
|---|---|
| DWG.TITLE: GPS-60R-DOS-03.dwg | |
| REV: | DATE: |
| REV: | DATE: |
| SCALE: N.T.S. | SHEET: 1 OF 3 |
| DRAWN BY: | |
| DATE: January 2009 | UNCLASSIFIED |

MATERIAL SPECIFICATIONS

STEEL PLATE AND STEEL ANGLES: 250 MPa (36 KSI)

STEEL TUBE: ASTM A500 GRADE B OR C OR EQUIVALENT fy=320 MPa (47 KSI)

HIGH HARDNESS STEEL: ASTRALLOY BP 6:33

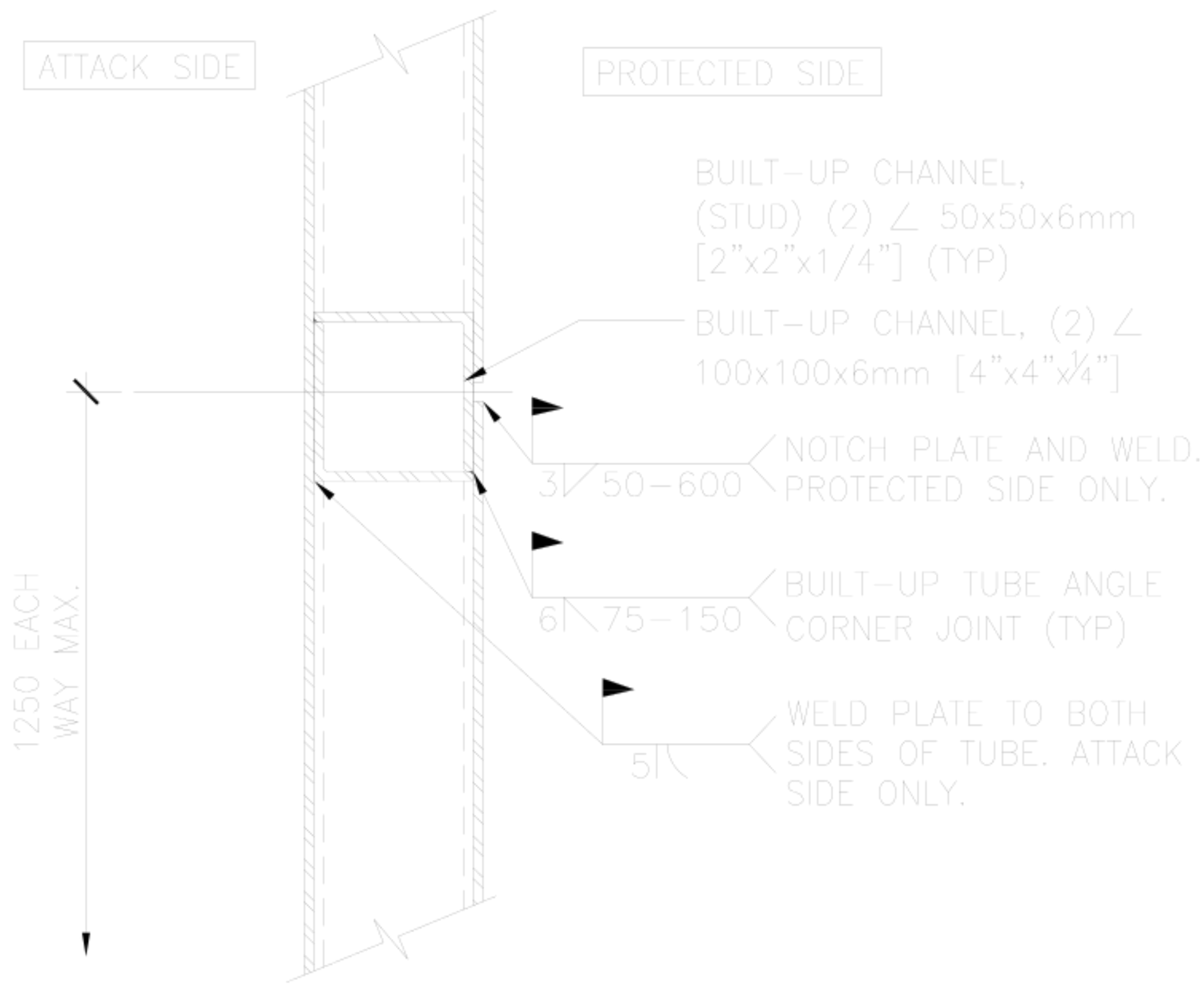


SECTION OF BUILT-UP TUBE

2 / . 60 MINUTE FE/BR HARDLINE WALL

SCALE: N.T.S.

NOTE: THIS DETAIL IS USED FOR 60 MINUTE FE/BR HARDLINES IN AREAS WITH CONCRETE CONSTRUCTION.

WARNING:
This document is the property of the U.S. Government. Further reproduction and/or distribution is prohibited without the express written permission of: Overseas Buildings Operations, U.S. Department of State, Washington, DC, 20522-0620. Information on this document is not to be altered except with the written approval of the individual whose seal appears hereon.

U.S. Department of State

Office of Overseas Buildings Operations

60 MINUTE FE/BR HARDLINE WALL
DUAL STEEL PLATE
GPS-60R-DOS-03

OBO/SEB Security Details

| | |
|---|---|
| DWG.TITLE: GPS-60R-DOS-03.dwg | |
| REV: | DATE: |
| REV: | DATE: |
| SCALE: N.T.S. | SHEET: 2 OF 3 |
| DRAWN BY: | |
| DATE: January 2009 | UNCLASSIFIED |

NOTES:

1. ANCHORAGE SHOWN IS FOR CONCRETE ONLY. FOR OTHER SUBSTRATES, REFER TO OBO FOR GUIDANCE.
2. ARCHITECTURAL FINISH NOT SHOWN.
3. WELDS SHOWN ARE FOR 60 MINUTE FE/BR. STEEL PLATES SHALL BE CONTINUOUSLY WELDED TO THE TUBE FRAME OVER THE ENTIRE PERIMETER ON THE ATTACK SIDE.
4. WELDING PER AWS D1.1 FLARE-BEVEL-GROOVE WELDS SHALL HAVE JOINTS WELDED FLUSH. WELDING PROCEDURES AND SEQUENCING SHALL MINIMIZE DISTORTION.
5. ELECTRODES E7018. ELECTRODES SHALL BE PURCHASED IN HERMETICALLY SEALED CONTAINERS OR SHALL BE DRIED FOR AT LEAST 2 HOURS BETWEEN 230° C AND 260° C BEFORE THEY ARE USED.

WARNING:
This document is the property of the U.S. Government. Further reproduction and/or distribution is prohibited without the express written permission of: Overseas Buildings Operations, U.S. Department of State, Washington, DC, 20522-0620. Information on this document is not to be altered except with the written approval of the individual whose seal appears hereon.

U.S. Department of State

Office of Overseas Buildings Operations

60 MINUTE FE/BR HARDLINE WALL
DUAL STEEL PLATE
GPS-60R-DOS-03

OBO/SEB Security Details

| | |
|---|---|
| DWG.TITLE: GPS-60R-DOS-03.dwg | |
| REV: | DATE: |
| REV: | DATE: |
| SCALE: N.T.S. | SHEET: 3 OF 3 |
| DRAWN BY: | |
| DATE: January 2009 | UNCLASSIFIED |

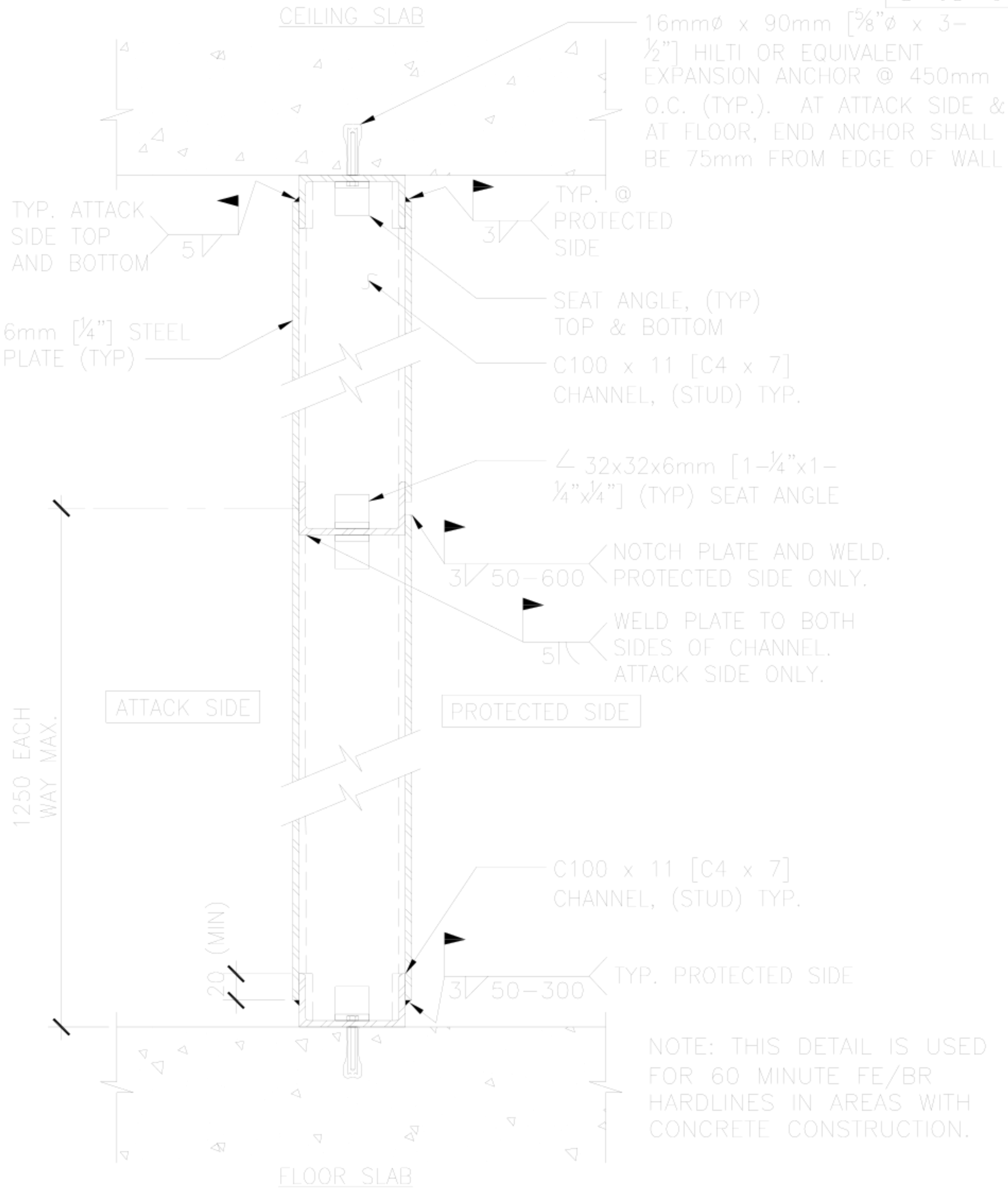


## 1 60 MINUTE FE/BR HARDLINE WALL

SCALE: N.T.S.

WARNING:
This document is the property of the U.S. Government. Further reproduction and/or distribution is prohibited without the express written permission of: Overseas Buildings Operations, U.S. Department of State, Washington, DC, 20522-0620. Information on this document is not to be altered except with the written approval of the individual whose seal appears hereon.

U.S. Department of State

Office of Overseas Buildings Operations

60 MINUTE FE/BR HARDLINE WALL
DUAL STEEL PLATE
GPS-60R-DOS-04

OBO/SEB Security Details

| | |
|---|---|
| DWG.TITLE: GPS-60R-DOS-04.dwg | |
| REV: | DATE: |
| REV: | DATE: |
| SCALE: N.T.S. | SHEET: 1 OF 3 |
| DRAWN BY: | |
| DATE: January 2009 | UNCLASSIFIED |

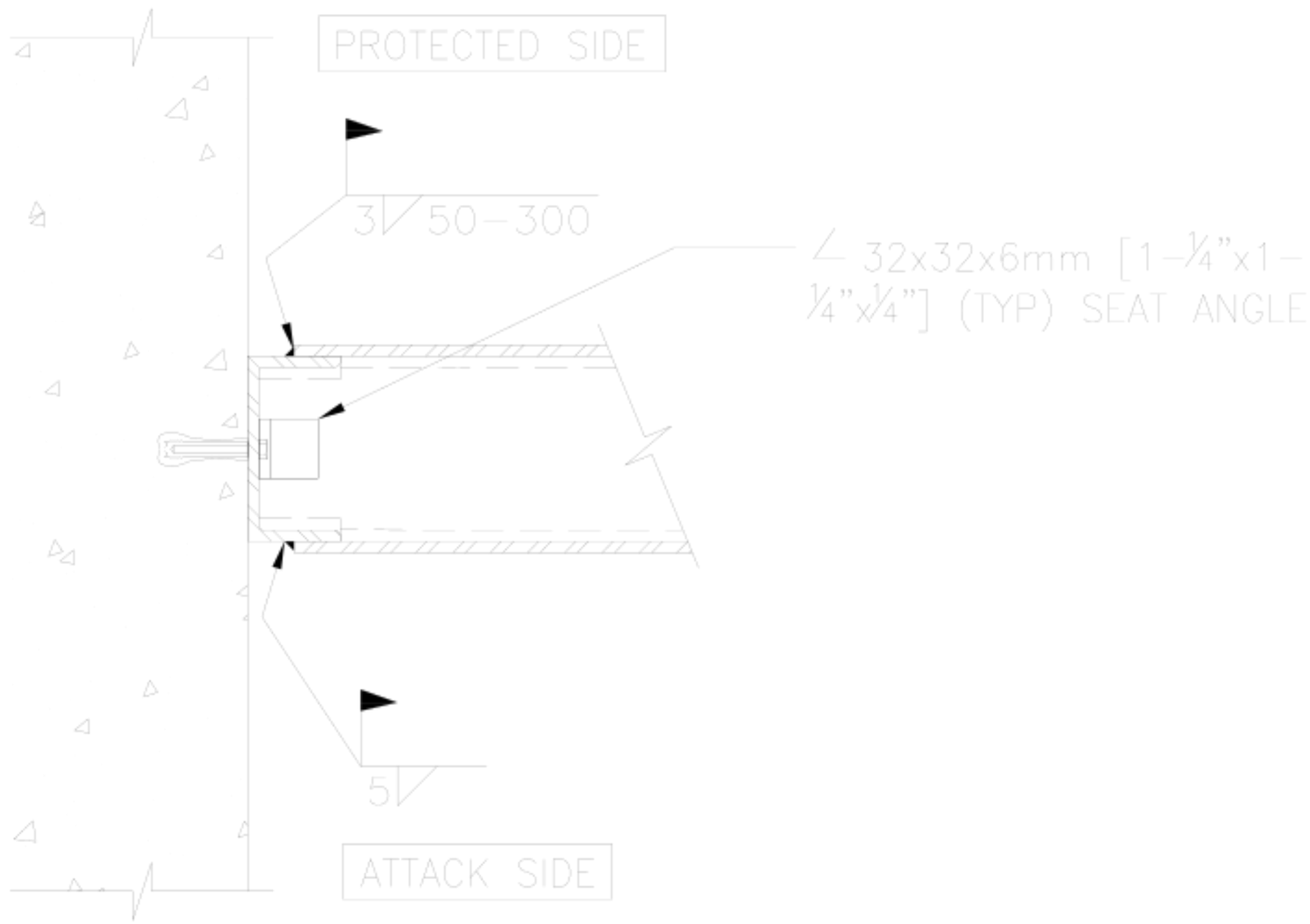


A DETAIL AT CONNECTION TO WALL
SCALE: N.T.S.

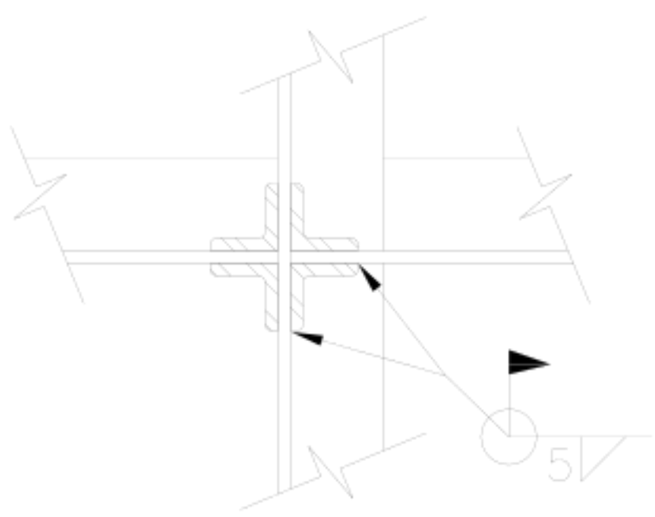


B DETAIL AT BUILT-UP CHANNEL INTERSECTION
SCALE: N.T.S.

WARNING:
This document is the property of the U.S. Government. Further reproduction and/or distribution is prohibited without the express written permission of: Overseas Buildings Operations, U.S. Department of State, Washington, DC, 20522-0620. Information on this document is not to be altered except with the written approval of the individual whose seal appears hereon.

U.S. Department of State
Office of Overseas Buildings Operations

60 MINUTE FE/BR HARDLINE WALL
DUAL STEEL PLATE
GPS-60R-DOS-04

OBO/SEB Security Details

| | |
|---|---|
| DWG.TITLE: GPS-60R-DOS-04.dwg | |
| REV: | DATE: |
| REV: | DATE: |
| SCALE: N.T.S. | SHEET: 2 OF 3 |
| DRAWN BY: | |
| DATE: January 2009 | UNCLASSIFIED |

NOTES:

1. ANCHORAGE SHOWN IS FOR CONCRETE ONLY. FOR OTHER SUBSTRATES, REFER TO OBO FOR GUIDANCE.
2. ARCHITECTURAL FINISH NOT SHOWN.
3. WELDS SHOWN ARE FOR 60 MINUTE FE/BR. STEEL PLATES SHALL BE CONTINUOUSLY WELDED TO THE TUBE FRAME OVER THE ENTIRE PERIMETER ON THE ATTACK SIDE.
4. WELDING PER AWS D1.1 FLARE-BEVEL-GROOVE WELDS SHALL HAVE JOINTS WELDED FLUSH. WELDING PROCEDURES AND SEQUENCING SHALL MINIMIZE DISTORTION.
5. ELECTRODES E7018. ELECTRODES SHALL BE PURCHASED IN HERMETICALLY SEALED CONTAINERS OR SHALL BE DRIED FOR AT LEAST 2 HOURS BETWEEN 230° C AND 260° C BEFORE THEY ARE USED.

MATERIAL SPECIFICATIONS

STEEL PLATE AND STEEL ANGLES: 250 MPa (36 KSI)

STEEL TUBE: ASTM A500 GRADE B OR C OR EQUIVALENT fy=320 MPa (47 KSI)

HIGH HARDNESS STEEL: ASTRALLOY BP 6:33

WARNING:
This document is the property of the U.S. Government. Further reproduction and/or distribution is prohibited without the express written permission of: Overseas Buildings Operations, U.S. Department of State, Washington, DC, 20522-0620. Information on this document is not to be altered except with the written approval of the individual whose seal appears hereon.

U.S. Department of State

Office of Overseas Buildings Operations

60 MINUTE FE/BR HARDLINE WALL
DUAL STEEL PLATE
GPS-60R-DOS-04

OBO/SEB Security Details

| | |
|---|---|
| DWG.TITLE: GPS-60R-DOS-04.dwg | |
| REV: | DATE: |
| REV: | DATE: |
| SCALE: N.T.S. | SHEET: 3 OF 3 |
| DRAWN BY: | |
| DATE: January 2009 | UNCLASSIFIED |

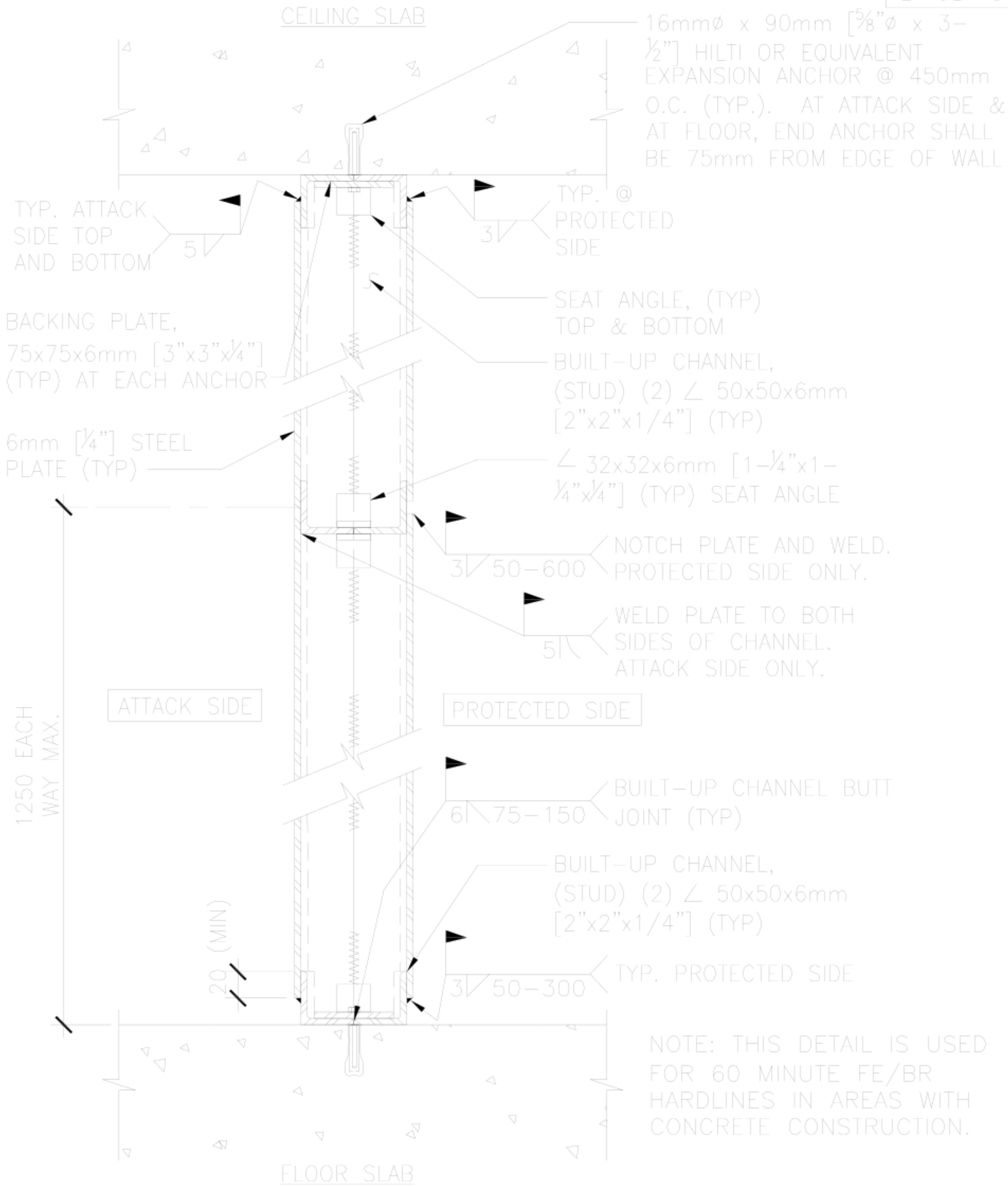


NOTE: THIS DETAIL IS USED FOR 60 MINUTE FE/BR HARDLINES IN AREAS WITH CONCRETE CONSTRUCTION.

## 1 60 MINUTE FE/BR HARDLINE WALL

SCALE: N.T.S.

WARNING:
This document is the property of the U.S. Government. Further reproduction and/or distribution is prohibited without the express written permission of: Overseas Buildings Operations, U.S. Department of State, Washington, DC, 20522-0620. Information on this document is not to be altered except with the written approval of the individual whose seal appears hereon.

U.S. Department of State
Office of Overseas Buildings Operations

60 MINUTE FE/BR HARDLINE WALL
MODIFIED GPS-60R-DOS-04
GPS-60R-DOS-04A

OBO/SEB Security Details

| | |
|---|---|
| DWG.TITLE: GPS-60R-DOS-04A.dwg | |
| REV: | DATE: |
| REV: | DATE: |
| SCALE: N.T.S. | SHEET: 1 OF 3 |
| DRAWN BY: | |
| DATE: January 2009 | UNCLASSIFIED |

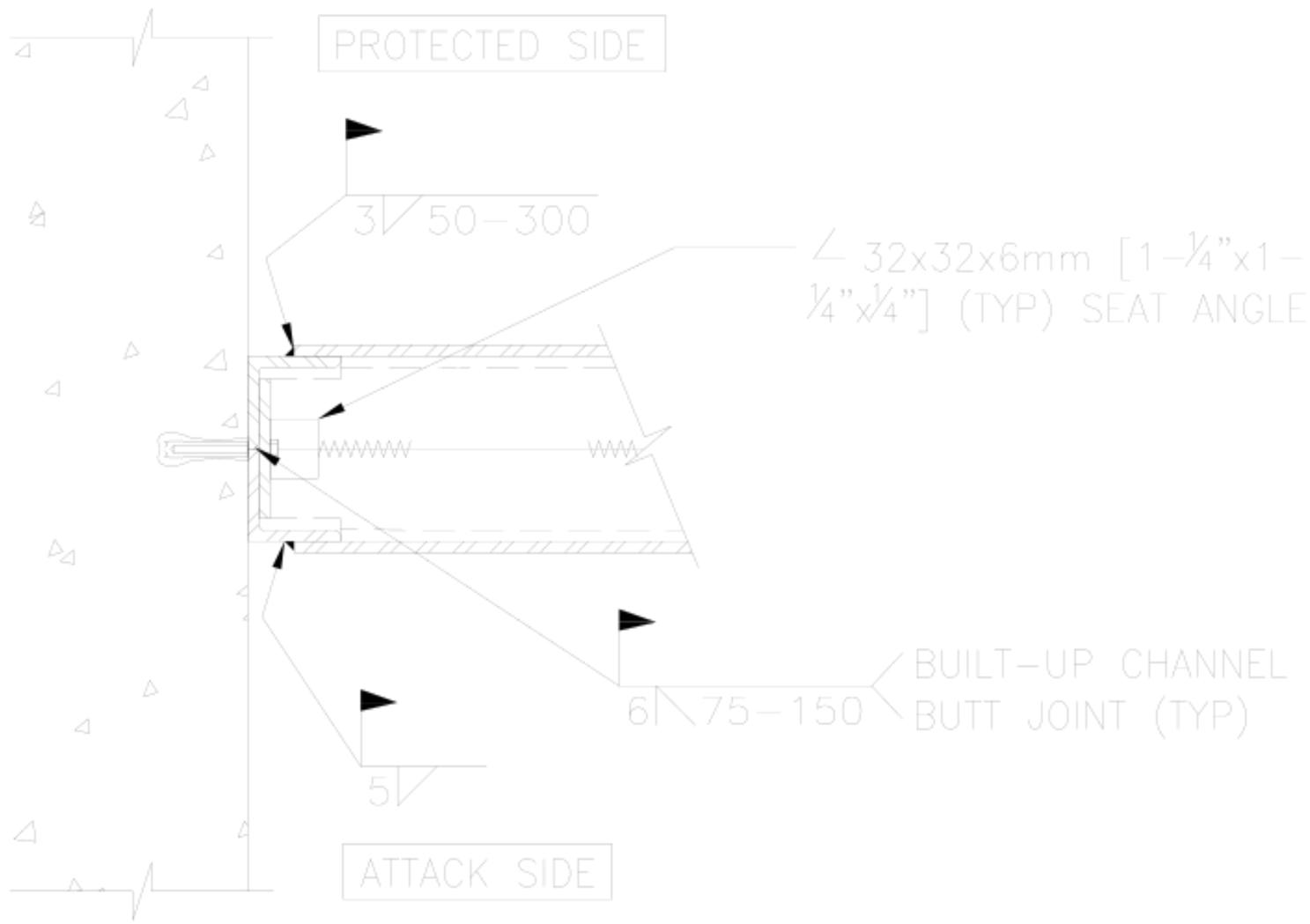


A DETAIL AT CONNECTION TO WALL
SCALE: N.T.S.

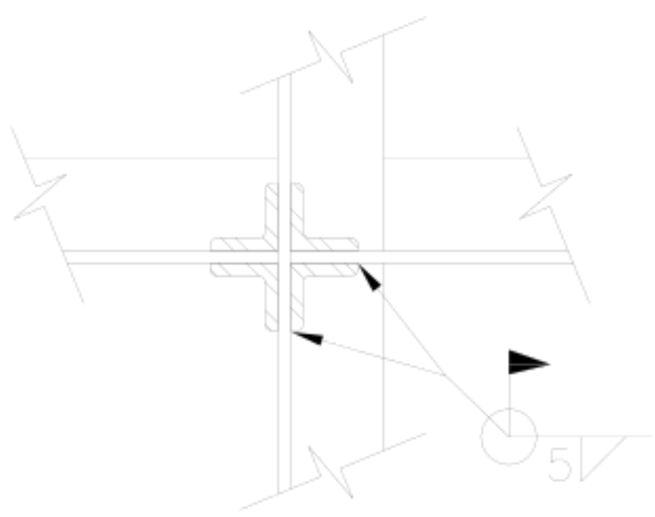


B DETAIL AT BUILT-UP CHANNEL INTERSECTION
SCALE: N.T.S.

WARNING:
This document is the property of the U.S. Government. Further reproduction and/or distribution is prohibited without the express written permission of: Overseas Buildings Operations, U.S. Department of State, Washington, DC, 20522-0620. Information on this document is not to be altered except with the written approval of the individual whose seal appears hereon.

U.S. Department of State
Office of Overseas Buildings Operations

60 MINUTE FE/BR HARDLINE WALL
MODIFIED GPS-60R-DOS-04
GPS-60R-DOS-04A

OBO/SEB Security Details

| | |
|---|---|
| DWG.TITLE: GPS-60R-DOS-04A.dwg | |
| REV: | DATE: |
| REV: | DATE: |
| SCALE: N.T.S. | SHEET: 2 OF 3 |
| DRAWN BY: | |
| DATE: January 2009 | UNCLASSIFIED |

NOTES:

1. ANCHORAGE SHOWN IS FOR CONCRETE ONLY. FOR OTHER SUBSTRATES, REFER TO OBO FOR GUIDANCE.
2. ARCHITECTURAL FINISH NOT SHOWN.
3. WELDS SHOWN ARE FOR 60 MINUTE FE/BR. STEEL PLATES SHALL BE CONTINUOUSLY WELDED TO THE TUBE FRAME OVER THE ENTIRE PERIMETER ON THE ATTACK SIDE.
4. WELDING PER AWS D1.1 FLARE-BEVEL-GROOVE WELDS SHALL HAVE JOINTS WELDED FLUSH. WELDING PROCEDURES AND SEQUENCING SHALL MINIMIZE DISTORTION.
5. ELECTRODES E7018. ELECTRODES SHALL BE PURCHASED IN HERMETICALLY SEALED CONTAINERS OR SHALL BE DRIED FOR AT LEAST 2 HOURS BETWEEN 230° C AND 260° C BEFORE THEY ARE USED.

MATERIAL SPECIFICATIONS

STEEL PLATE AND STEEL ANGLES: 250 MPa (36 KSI)

STEEL TUBE: ASTM A500 GRADE B OR C OR EQUIVALENT fy=320 MPa (47 KSI)

HIGH HARDNESS STEEL: ASTRALLOY BP 6:33

WARNING:
This document is the property of the U.S. Government. Further reproduction and/or distribution is prohibited without the express written permission of: Overseas Buildings Operations, U.S. Department of State, Washington, DC, 20522-0620. Information on this document is not to be altered except with the written approval of the individual whose seal appears hereon.

U.S. Department of State

Office of Overseas Buildings Operations

60 MINUTE FE/BR HARDLINE WALL
MODIFIED GPS-60R-DOS-04
GPS-60R-DOS-04A

OBO/SEB Security Details

| | |
|---|---|
| DWG.TITLE: GPS-60R-DOS-04A.dwg | |
| REV: | DATE: |
| REV: | DATE: |
| SCALE: N.T.S. | SHEET: 3 OF 3 |
| DRAWN BY: | |
| DATE: January 2009 | UNCLASSIFIED |

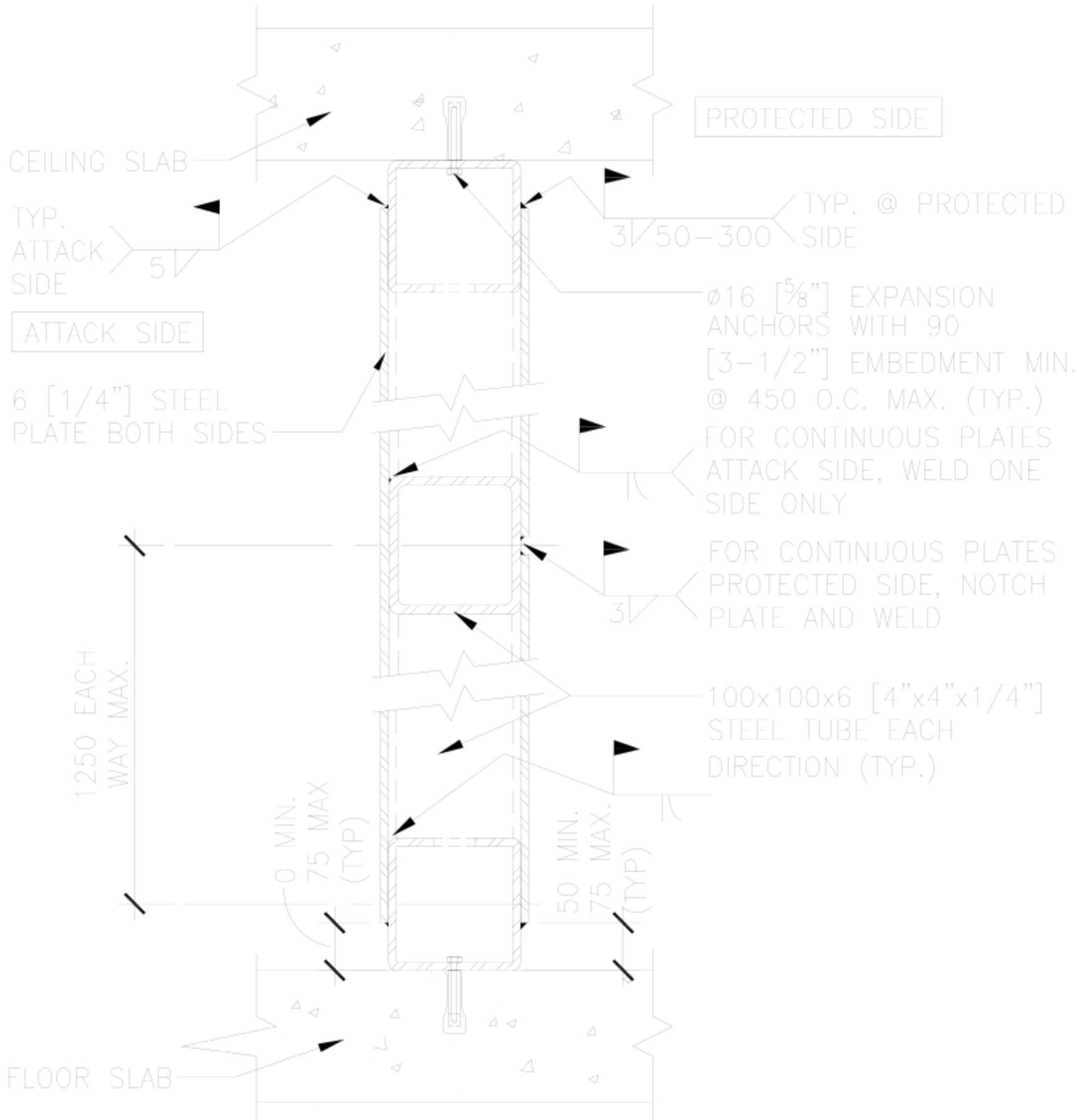


1 60 MINUTE FE/BR HARDLINE WALL

SCALE: N.T.S.

NOTE: THIS DETAIL IS USED FOR 60 MINUTE FE/BR HARDLINES IN AREAS WITH CONCRETE CONSTRUCTION.

OPTION: INSTEAD OF TWO 6mm THICK STEEL PLATES, HIGH HARDNESS STEEL MAY BE USED WITH 6mm [1/4"] ON THE ATTACK SIDE AND 3mm [1/8"] ON THE PROTECTED SIDE.

MATERIAL SPECIFICATIONS

STEEL PLATE AND STEEL ANGLES: 250 MPa (36 KSI)

STEEL TUBE: ASTM A500 GRADE B OR C OR EQUIVALENT fy=320 MPa (47 KSI)

HIGH HARDNESS STEEL: ASTRALLOY BP 6:33

WARNING:
This document is the property of the U.S. Government. Further reproduction and/or distribution is prohibited without the express written permission of: Overseas Buildings Operations, U.S. Department of State, Washington, DC, 20522-0620. Information on this document is not to be altered except with the written approval of the individual whose seal appears hereon.

U.S. Department of State

Office of Overseas Buildings Operations

60 MINUTE FE/BR HARDLINE WALL
ALTERNATE DUAL STEEL PLATE
GPS-60R-DOS-05

OBO/SEB Security Details

| | |
|---|---|
| DWG.TITLE: GPS-60R-DOS-05.dwg | |
| REV: | DATE: |
| REV: | DATE: |
| SCALE: N.T.S. | SHEET: 1 OF 2 |
| DRAWN BY: | |
| DATE: January 2009 | UNCLASSIFIED |

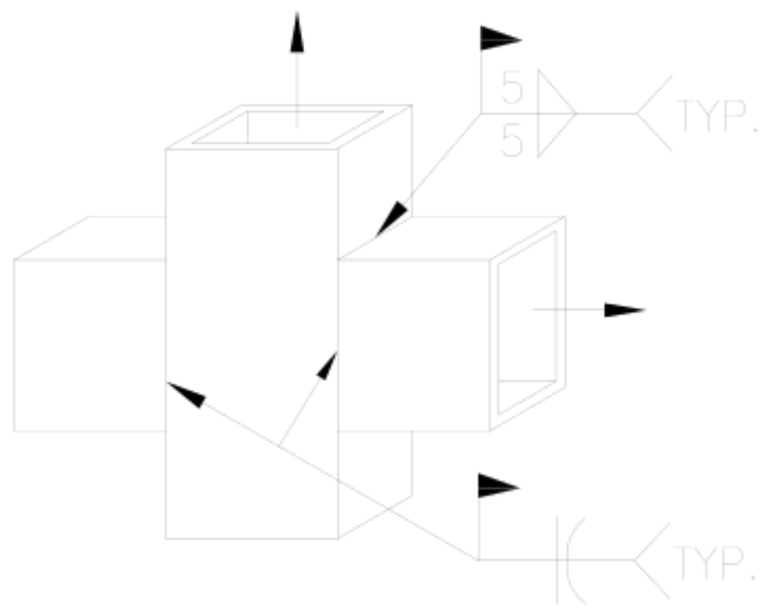


A

ISOMETRIC VIEW OF JOINT

SCALE: N.T.S.

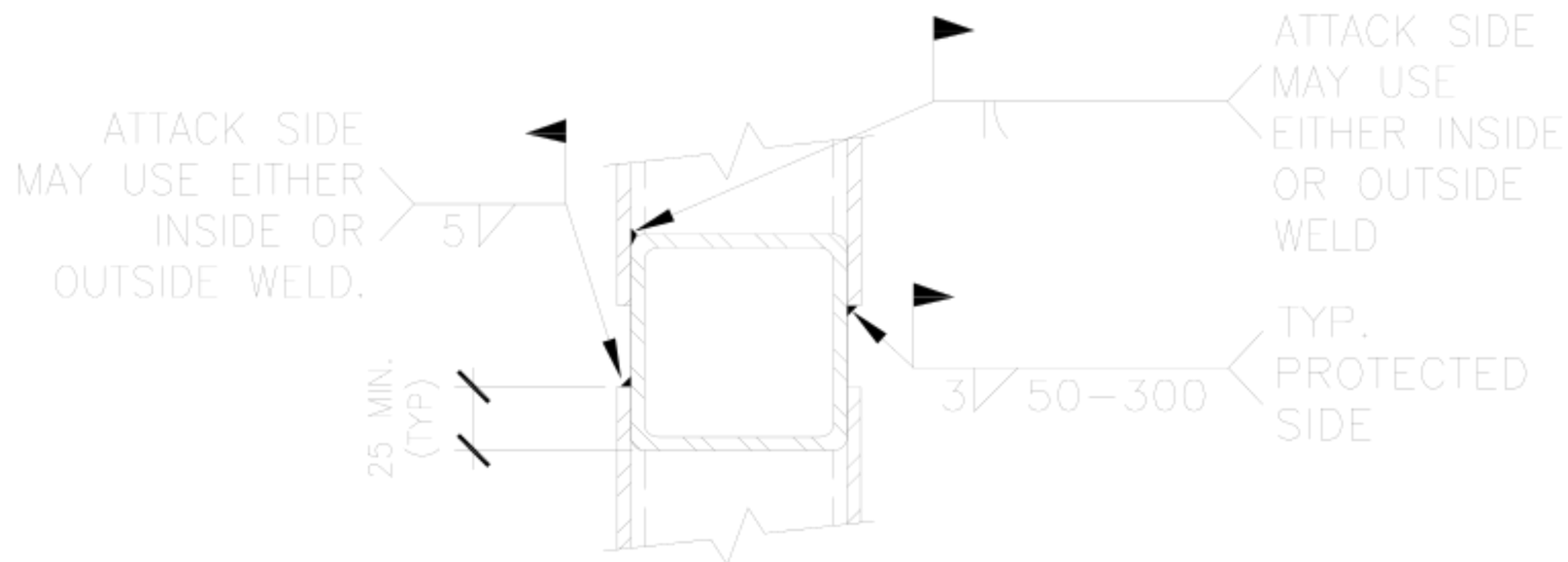


B

DETAIL AT EDGE OF PLATES

SCALE: N.T.S.

NOTES:

1. ANCHORAGE SHOWN IS FOR CONCRETE ONLY. FOR OTHER SUBSTRATES, REFER TO OBO FOR GUIDANCE.
2. ARCHITECTURAL FINISH NOT SHOWN.
3. WELDS SHOWN ARE FOR 60 MINUTE FE/BR. STEEL PLATES SHALL BE CONTINUOUSLY WELDED TO THE TUBE FRAME OVER THE ENTIRE PERIMETER ON THE ATTACK SIDE.
4. WELDING PER AWS D1.1 FLARE-BEVEL-GROOVE WELDS SHALL HAVE JOINTS WELDED FLUSH. WELDING PROCEDURES AND SEQUENCING SHALL MINIMIZE DISTORTION.
5. ELECTRODES E7018. ELECTRODES SHALL BE PURCHASED IN HERMETICALLY SEALED CONTAINERS OR SHALL BE DRIED FOR AT LEAST 2 HOURS BETWEEN 230° C AND 260° C BEFORE THEY ARE USED.

WARNING:
This document is the property of the U.S. Government. Further reproduction and/or distribution is prohibited without the express written permission of: Overseas Buildings Operations, U.S. Department of State, Washington, DC, 20522-0620. Information on this document is not to be altered except with the written approval of the individual whose seal appears hereon.

U.S. Department of State

Office of Overseas Buildings Operations

60 MINUTE FE/BR HARDLINE WALL
ALTERNATE DUAL STEEL PLATE
GPS-60R-DOS-05

OBO/SEB Security Details

| | |
|---|---|
| DWG.TITLE: GPS-60R-DOS-05.dwg | |
| REV: | DATE: |
| REV: | DATE: |
| SCALE: N.T.S. | SHEET: 2 OF 2 |
| DRAWN BY: | |
| DATE: January 2009 | UNCLASSIFIED |

# Penetration Details

Unclassified

# Penetration Details

PP-00-01 – Grouted Pipe Penetration

DP-00-01 – CAA Tamperproof Penetration (WWF)

DP-00-02 – CAA Tamperproof Penetration (WWF)

DP-00-03 – CAA Tamperproof Penetration (Mesh)

DP-23-01 – Duct Penetration Thru Hardline Wall

DP-23-02 – Duct Penetration Thru Steel Hardline Wall

DP-23-03 – Duct Penetration

PP-23-01 – Fingerprint Station Penetration

PP-23-02 – Typical Pipe Penetration

PP-23-03 – Typical Pipe Penetration – Seismic

PP-23-04 – Typical Pipe Penetration – With Insulation

PP-23-05 – Cable Tray Penetration

# Penetration Details

PP-23-06 – Typical Pipe Penetration – Hose Bibb

PP-23-07 – Typical Pipe Penetration – Ganged Pipes

PP-33-01 – Typical Pipe Penetration – Typical Drain

PP-33-02 – Typical Pipe Penetration

PP-33-03 – Typical Conduit Penetration – In Wall

PP-33-04 – Typical Pipe Penetration – Vertical

PP-33-05 – Typical Pipe Penetration – Vertical Alternate

PP-33-06 – Typical Pipe Penetration – Gooseneck

PP-33-07 – Generator Exhaust Detail

PP-33-08 – Exhaust Pipe Penetration Detail

FILLER MATERIAL @ GROUT/PIPE GAP PER PROJECT SPECIFIC FIRE PROTECTION AND ACOUSTIC REQUIREMENTS.

FE/BR WALL

HIGH STRENGTH NON SHRINK GROUT 61 MPa (9,000 PSI). DRY PACK TIGHT FULL DEPTH OF WALL, MINIMUM 100mm.

6mm MAX CONSTRUCTION TOLERANCE BETWEEN PIPE AND SURROUNDING CONSTRUCTION WHERE REQUIRED FOR SEISMIC OR THERMAL MOVEMENT.

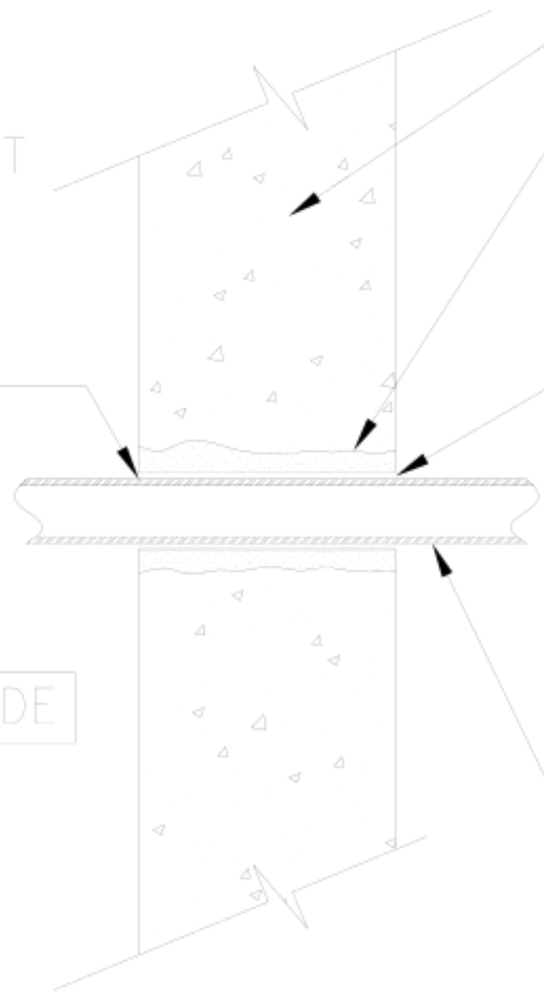


PIPE OR CONDUIT. IF THE GAP BETWEEN THE PIPE OR CONDUIT AND THE SURROUNDING CONSTRUCTION IS GREATER THAN 25mm THEN GROUT PACKING IS UNACCEPTABLE AND THE PENETRATION MUST BE PROTECTED WITH STEEL PLATING.

HIGH STRENGTH NON SHRINK GROUT 61 MPa (9,000 PSI). DRY PACK TIGHT FULL DEPTH OF WALL, MINIMUM 100mm.

6mm MAX CONSTRUCTION TOLERANCE BETWEEN PIPE AND SURROUNDING CONSTRUCTION WHERE REQUIRED FOR SEISMIC OR THERMAL MOVEMENT.

PIPE OR CONDUIT. IF THE GAP BETWEEN THE PIPE OR CONDUIT AND THE SURROUNDING CONSTRUCTION IS GREATER THAN 25mm THEN GROUT PACKING IS UNACCEPTABLE AND THE PENETRATION MUST BE PROTECTED WITH STEEL PLATING.

NOTES:

1) THIS DETAIL IS USED FOR 15 & 60 MINUTE BALLISTIC PROTECTION OF PIPES AND CONDUITS IN HARDLINE WALL.

2) PENETRATION MUST BE LESS THAN 620 SQ CM.

3) DETAIL CAN BE USED FOR "CORE" SPACES FOR BR, BUT OTHER COUNTERMEASURES MAY BE REQUIRED.

## 1 GROUTED PIPE PENETRATION

SCALE: N.T.S.

WARNING:
This document is the property of the U.S. Government. Further reproduction and/or distribution is prohibited without the express written permission of: Overseas Buildings Operations, U.S. Department of State, Washington, DC, 20522-0620. Information on this document is not to be altered except with the written approval of the individual whose seal appears hereon.

U.S. Department of State

Office of Overseas Buildings Operations

GROUTED PIPE PENETRATION
15 AND 60 MINUTE
PP-00-01

US DOS Security Details

| | |
|---|---|
| DWG.TITLE: PP-00-01.dwg | |
| REV: | DATE: |
| REV: | DATE: |
| SCALE: N.T.S. | SHEET: 1 OF 1 |
| DRAWN BY: DEH | |
| DATE: MAY 2012 | UNCLASSIFIED |

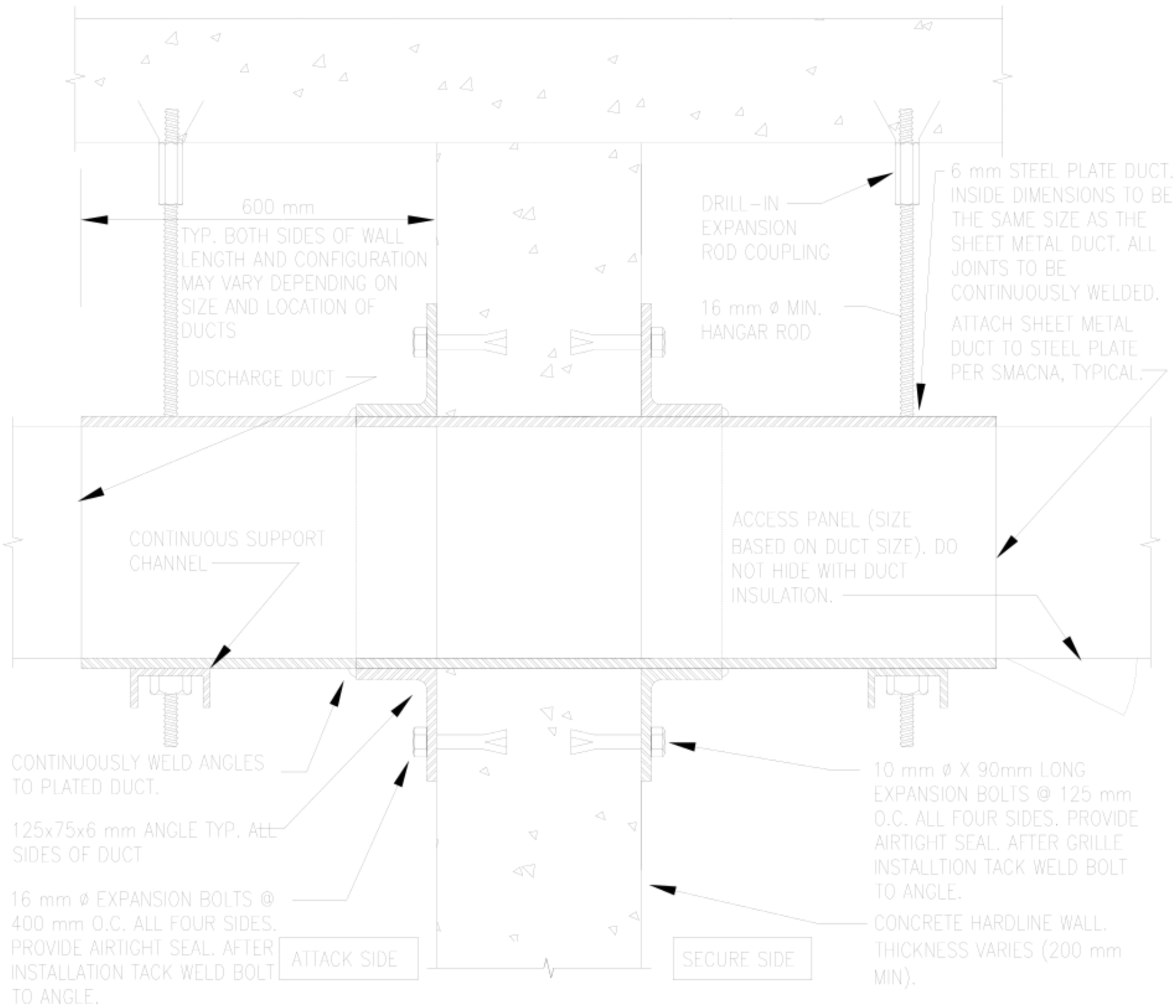


## 1 BR PROTECTION AT CONCRETE HARDLINE PENETRATION
SCALE: NONE

THIS DUCT PENETRATION IS USED ABOVE CEILINGS AT DUCT TRANSITIONS THROUGH CONCRETE HARDLINE WALLS THAT REQUIRE BALLISTIC PROTECTION ONLY.

WARNING:
This document is the property of the U.S. Government. Further reproduction and/or distribution is prohibited without the express written permission of: Overseas Buildings Operations, U.S. Department of State, Washington, DC, 20522-0620. Information on this document is not to be altered except with the written approval of the individual whose seal appears hereon.

U.S. Department of State
Office of Overseas Buildings Operations

# DUCT PENETRATION THRU HARDLINE WALL DP-23-01

OBO/SEB Security Details

| | |
|---|---|
| DWG.TITLE: DP-23-01.dwg | |
| REV: | DATE: |
| REV: | DATE: |
| SCALE: 1:20 | SHEET: 1 OF 1 |
| DRAWN BY: | |
| DATE: January 2012 | UNCLASSIFIED |

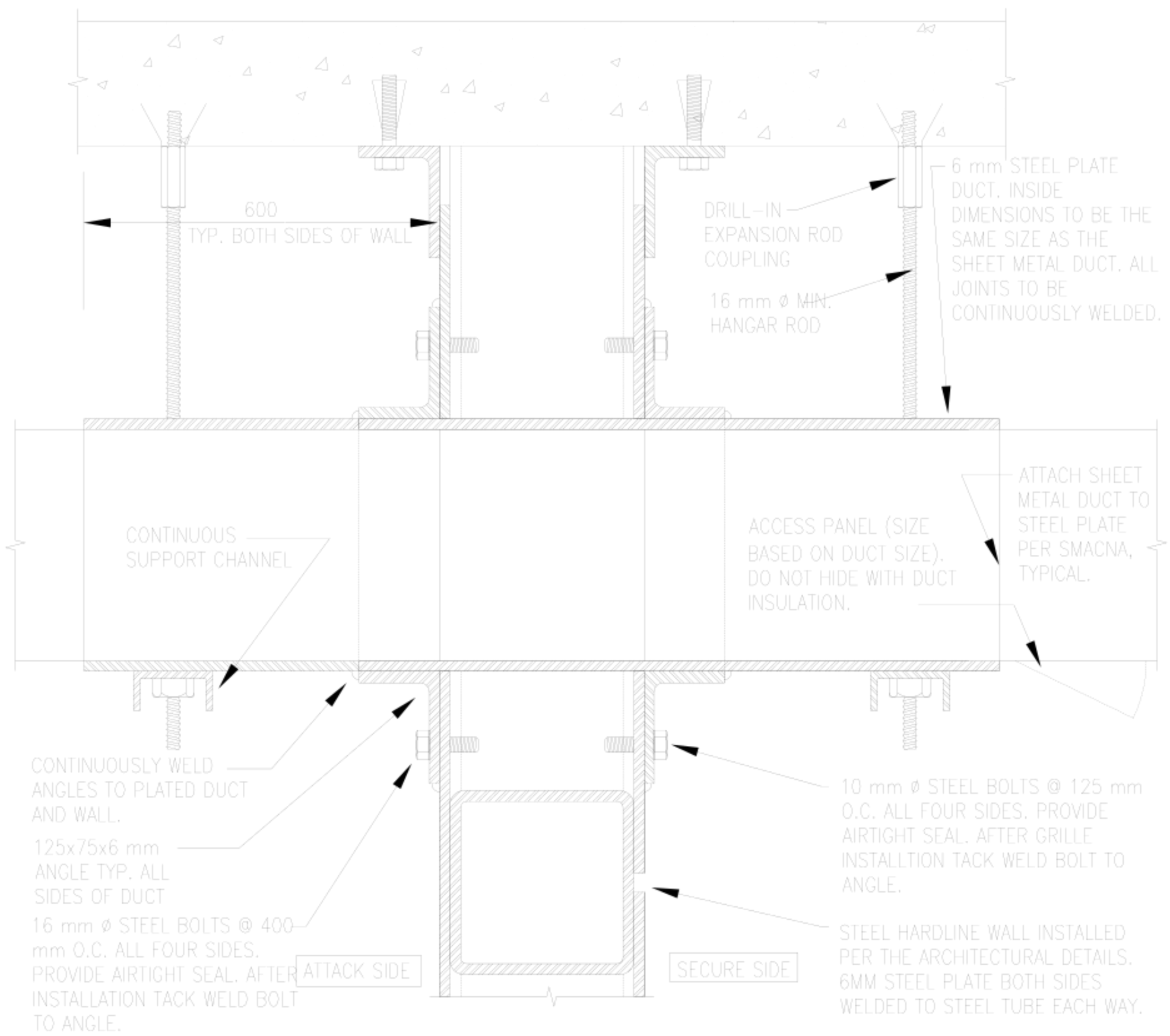


## 1 BR DUCT PENETRATION AT STEEL HARDLINE WALL

SCALE: NONE

THIS DUCT PENETRATION IS USED ABOVE CEILINGS AT DUCT TRANSITIONS THROUGH STEEL HARDLINE WALLS THAT REQUIRE BALLISTIC PROTECTION ONLY.

WARNING:
This document is the property of the U.S. Government. Further reproduction and/or distribution is prohibited without the express written permission of: Overseas Buildings Operations, U.S. Department of State, Washington, DC, 20522-0620. Information on this document is not to be altered except with the written approval of the individual whose seal appears hereon.

U.S. Department of State

Office of Overseas Buildings Operations

# DUCT PENETRATION THRU STEEL HARDLINE WALL DP-23-02

OBO/SEB Security Details

| | |
|---|---|
| DWG.TITLE: DP-23-02.dwg | |
| REV: | DATE: |
| REV: | DATE: |
| SCALE: 1:20 | SHEET: 1 OF 1 |
| DRAWN BY: | |
| DATE: January 2009 | UNCLASSIFIED |

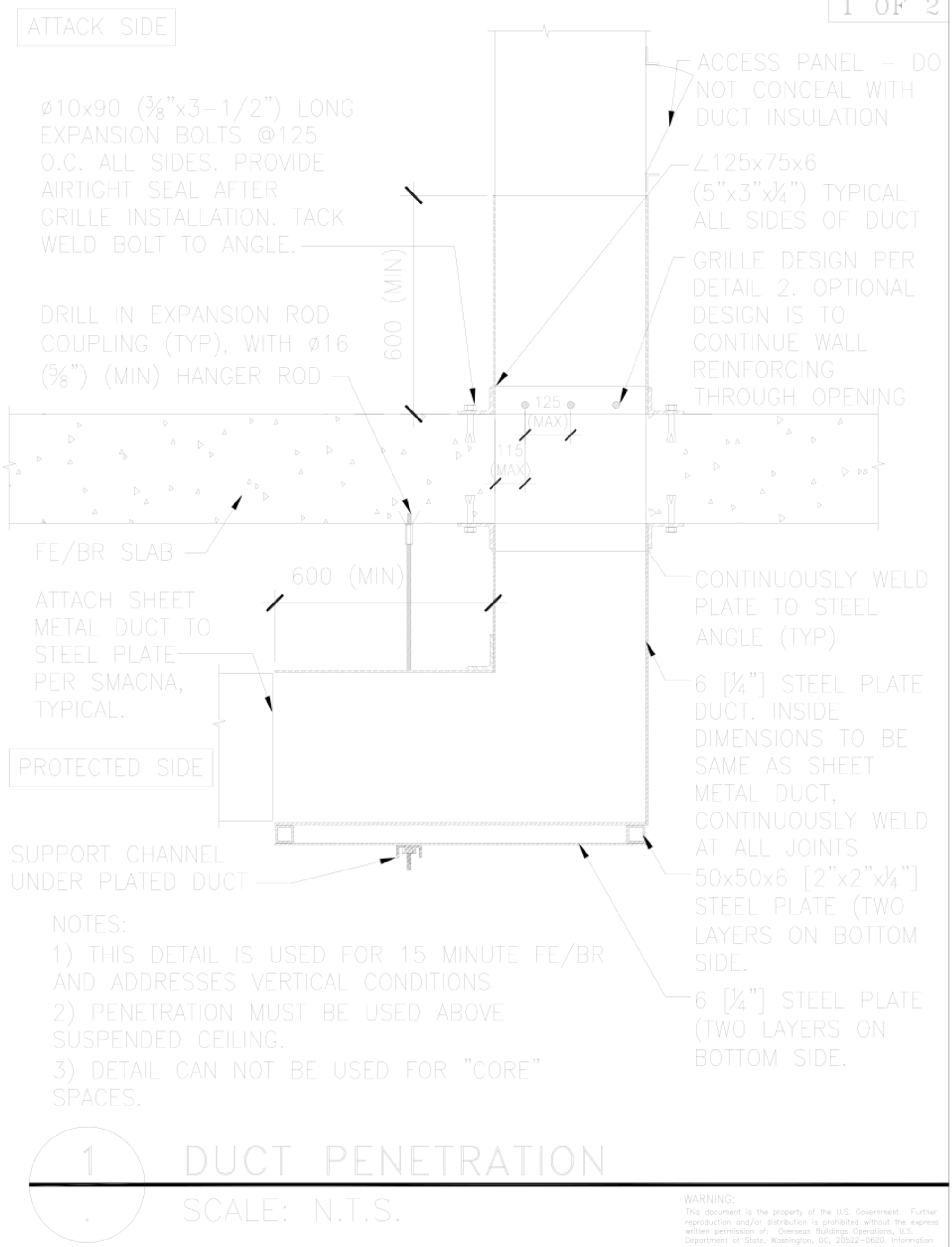


NOTES:

1) THIS DETAIL IS USED FOR 15 MINUTE FE/BR AND ADDRESSES VERTICAL CONDITIONS

2) PENETRATION MUST BE USED ABOVE SUSPENDED CEILING.

3) DETAIL CAN NOT BE USED FOR "CORE" SPACES.

## 1 DUCT PENETRATION

SCALE: N.T.S.

WARNING:
This document is the property of the U.S. Government. Further reproduction and/or distribution is prohibited without the express written permission of: Overseas Buildings Operations, U.S. Department of State, Washington, DC, 20522-0620. Information on this document is not to be altered except with the written approval of the individual whose seal appears hereon.

U.S. Department of State

Office of Overseas Buildings Operations

DUCT PENETRATION
DP-23-03

OBO/SEB Security Details

| | |
|---|---|
| DWG.TITLE: DP-23-03.dwg | |
| REV: | DATE: |
| REV: | DATE: |
| SCALE: N.T.S. | SHEET: 1 OF 2 |
| DRAWN BY: | |
| DATE: January 2012 | UNCLASSIFIED |

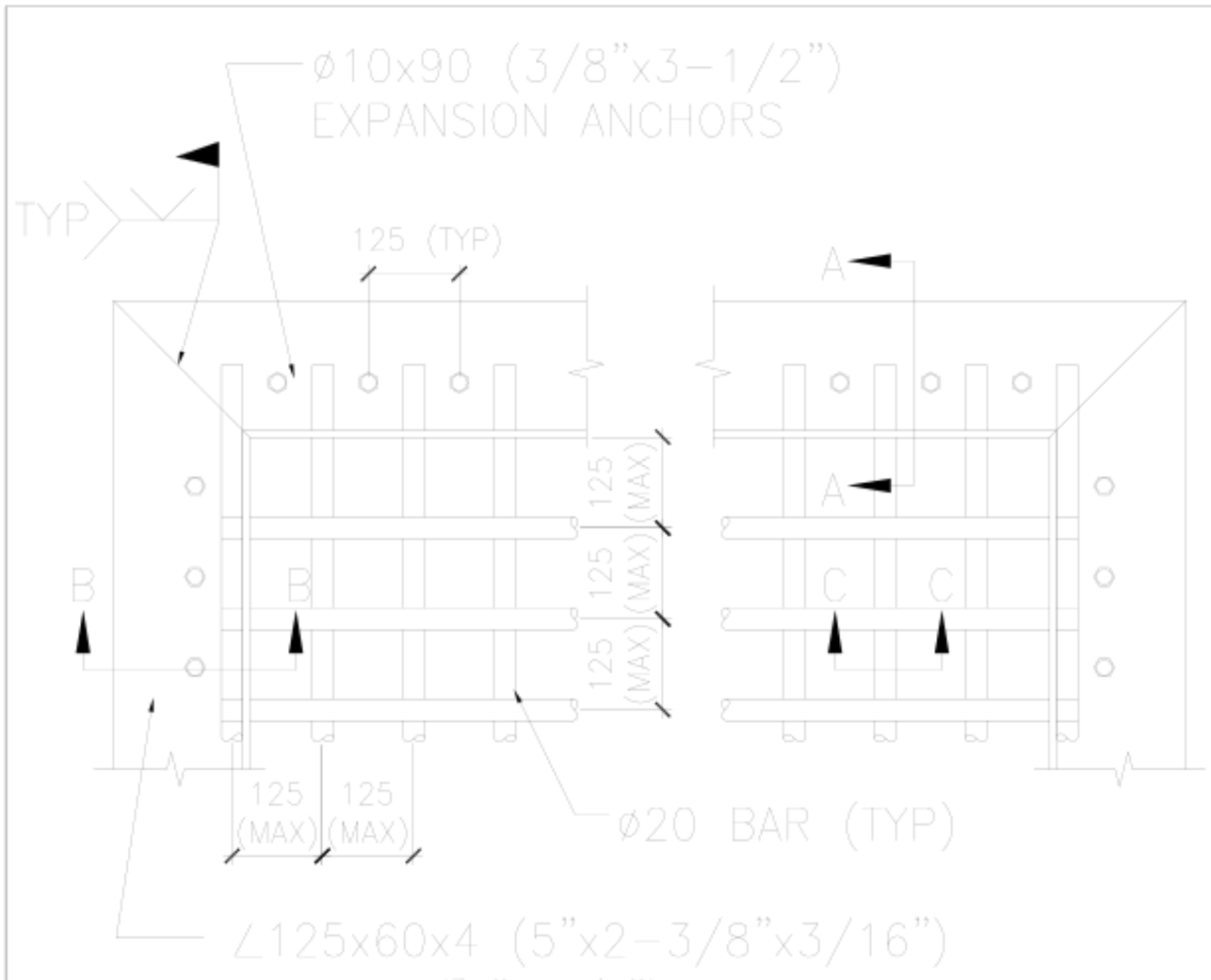


MATERIAL SPECIFICATIONS:
ANGLES:
fy=250 MPa (36 KSI) MIN.
REINFORCING BARS:
fy=400 MPa (60 KSI) MIN.
SQUARE BARS:
fy=250 MPa (36 KSI) MIN.

ANCHORING SPECIFICATIONS:
CONCRETE: M10x90 (3/8"x3-1/2")(MIN) DROP-IN EXPANSION ANCHORS @125 O.C. (MAX). ANCHOR/BOLT HEADS SHOULD BE WELDED TO THE FRAME
STEEL: M10x1.5x25 (3/8"-16NC x 1") SOCKET HEAD CAP SCREWS @125 O.C. ANCHOR/BOLT HEADS SHOULD BE WELDED TO THE FRAME
MASONRY: M10x150 (3/8"x6")(MIN) HILTI C-20 OR EQUIVALENT @250 O.C. ANCHOR/BOLT HEADS SHOULD BE WELDED TO THE FRAME

ALL DIMENSIONS ARE IN MM. ACCEPTABLE IP SIZES IN ( ).

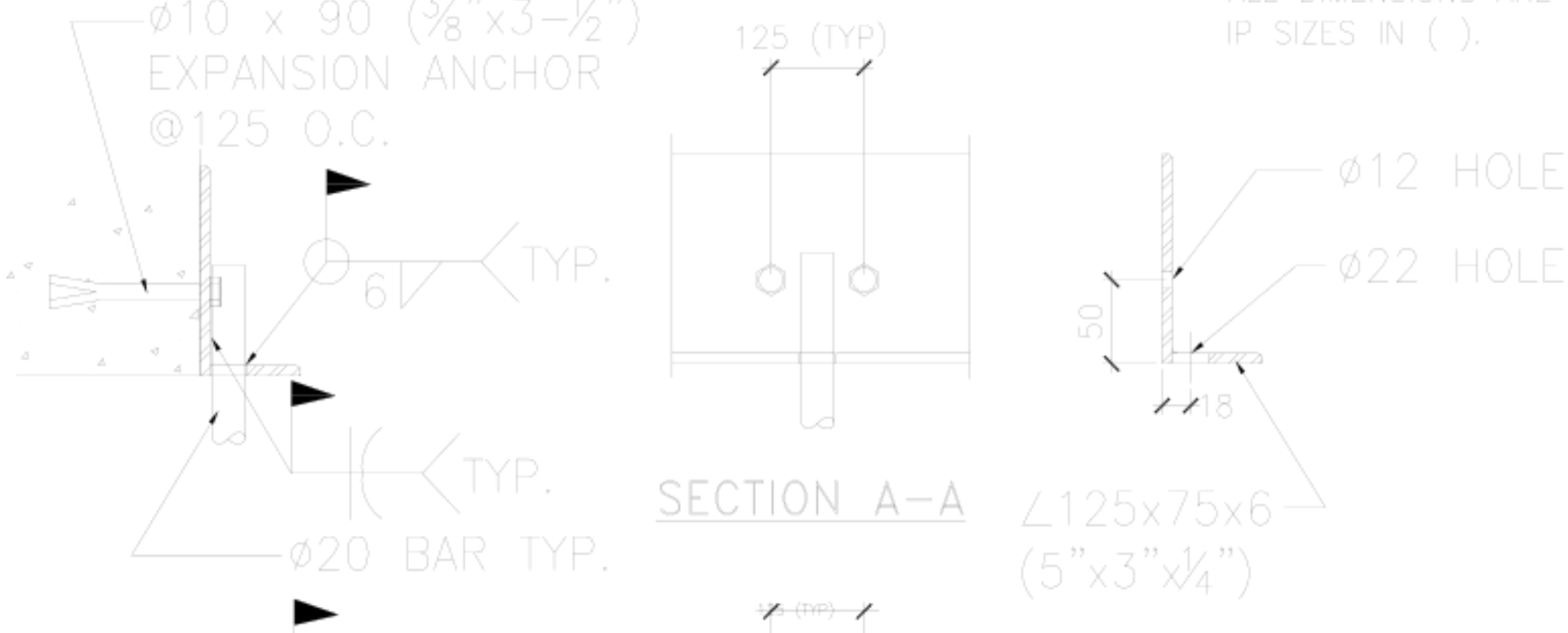


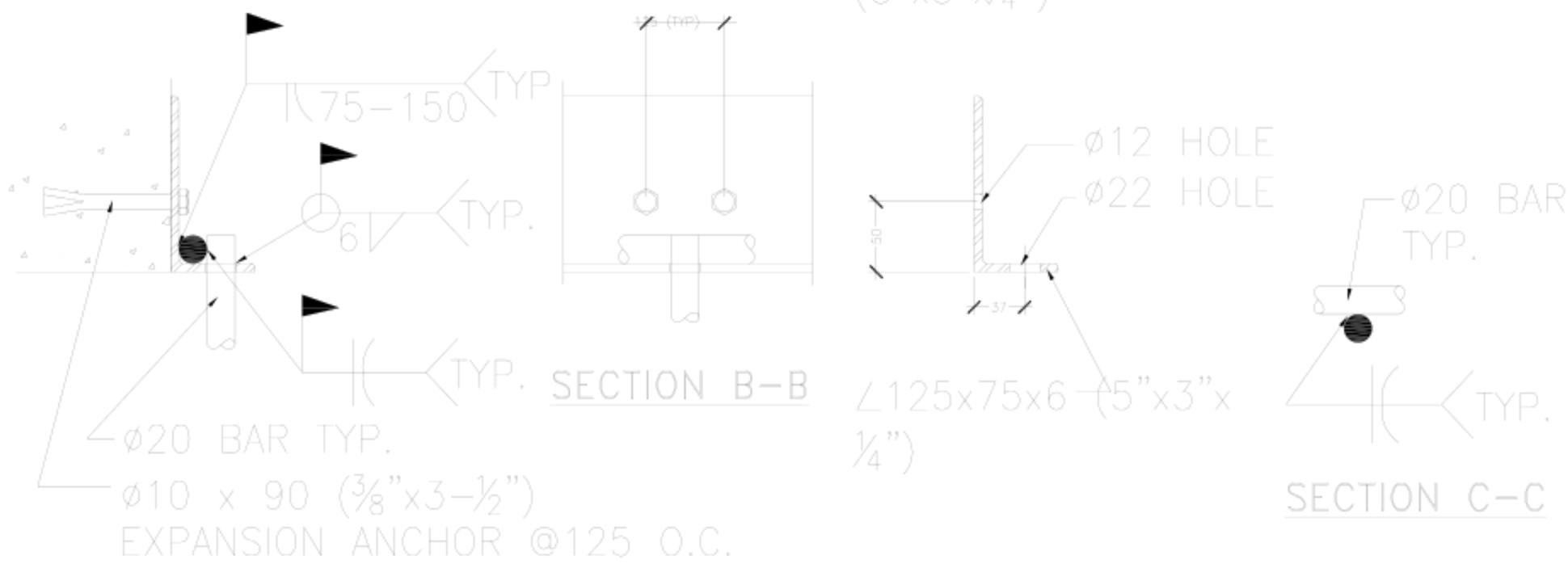


## 2 ELEVATION – 15 MINUTE FE GRILLE

SCALE: NTS

NOTE: THESE GRILLES ARE USED AT DUCT PENETRATIONS AND OTHER OPENINGS REQUIRING 15 MINUTE FE PROTECTION

WARNING:
This document is the property of the U.S. Government. Further reproduction and/or distribution is prohibited without the express written permission of: Overseas Buildings Operations, U.S. Department of State, Washington, DC, 20522-0620. Information on this document is not to be altered except with the written approval of the individual whose seal appears hereon.

U.S. Department of State
Office of Overseas Buildings Operations

DUCT PENETRATION
DP-23-03

OBO/SEB Security Details

| | |
|---|---|
| DWG.TITLE: DP-23-03.dwg | |
| REV: | DATE: |
| REV: | DATE: |
| SCALE: N.T.S. | SHEET: 2 OF 2 |
| DRAWN BY: | |
| DATE: January 2009 | UNCLASSIFIED |

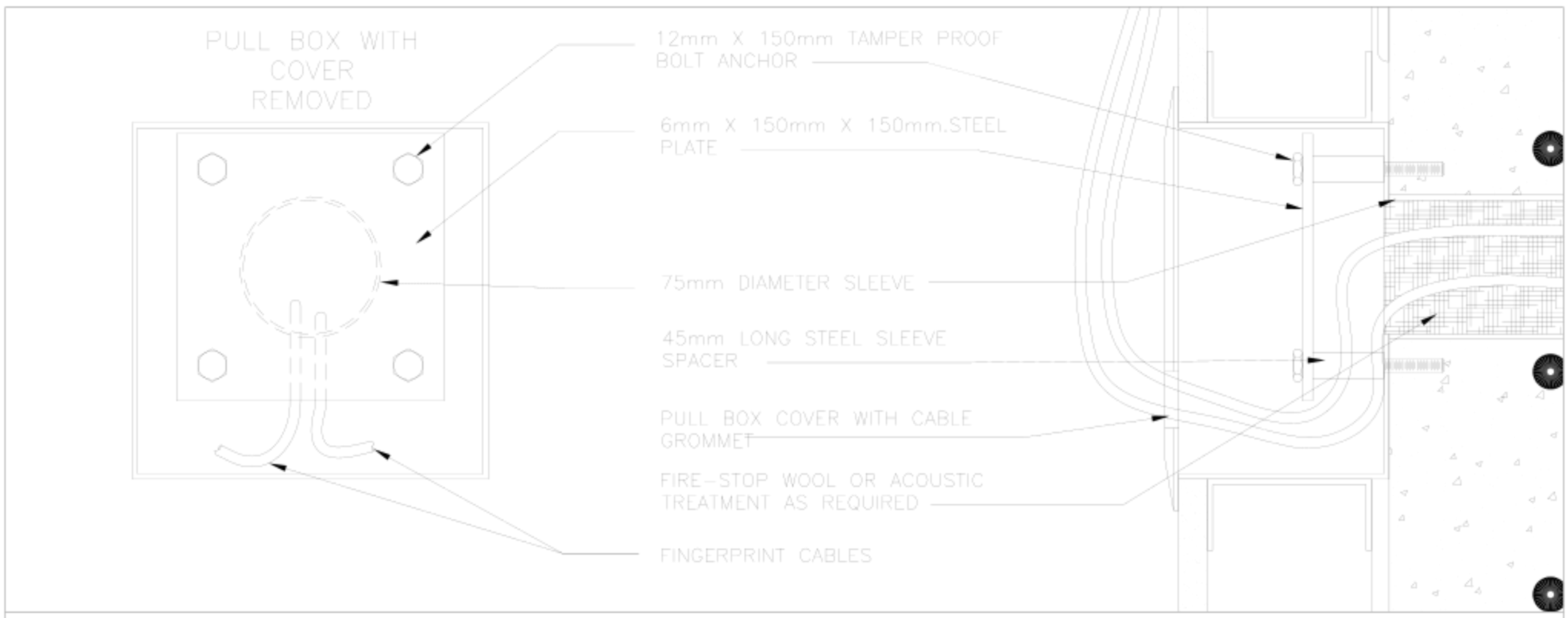


# FINGERPRINT STATION FE/BR CABLE PENETRATION

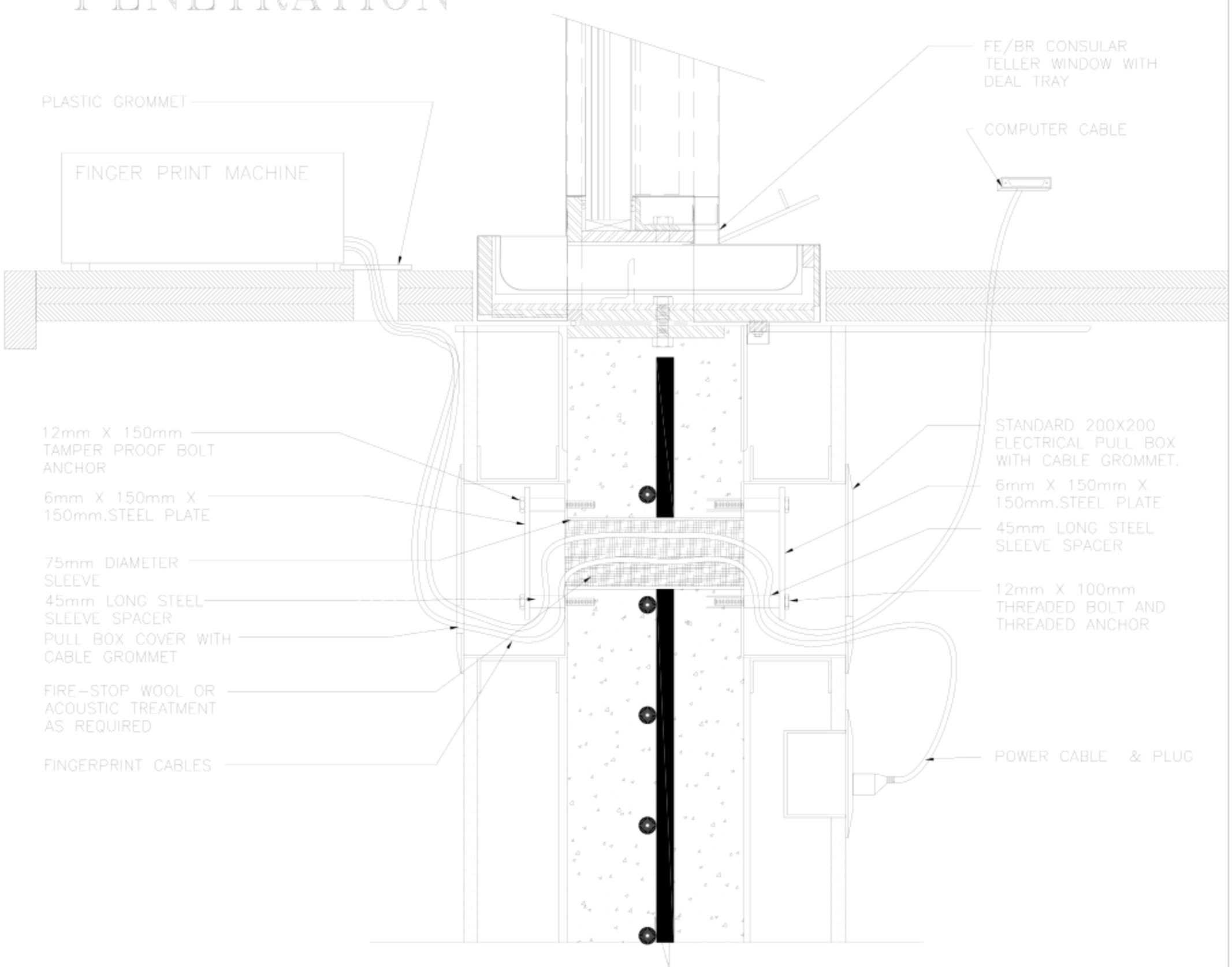


WARNING: This document is the property of the U.S. Government. Further reproduction and/or distribution outside the contractor team is prohibited without the express written approval of:

U.S. Department of State
ATTN:
Washington, DC 20520

U.S. Department of State

Office of Overseas Buildings Operations

FINGERPRINT STATION
BR PENETRATION DETAIL
PP-23-01

OBO/SEB Security Details

| | |
|---|---|
| DWG.TITLE: PP-23-01.dwg | |
| REV: | DATE: 10/30/06 |
| REV: | DATE: |
| SCALE: As Noted | SHEET: 1 of 2 |
| DRAWN BY: DPM/JJG | |
| DATE: January 2009 | SENSITIVE BUT UNCLASSIFIED |

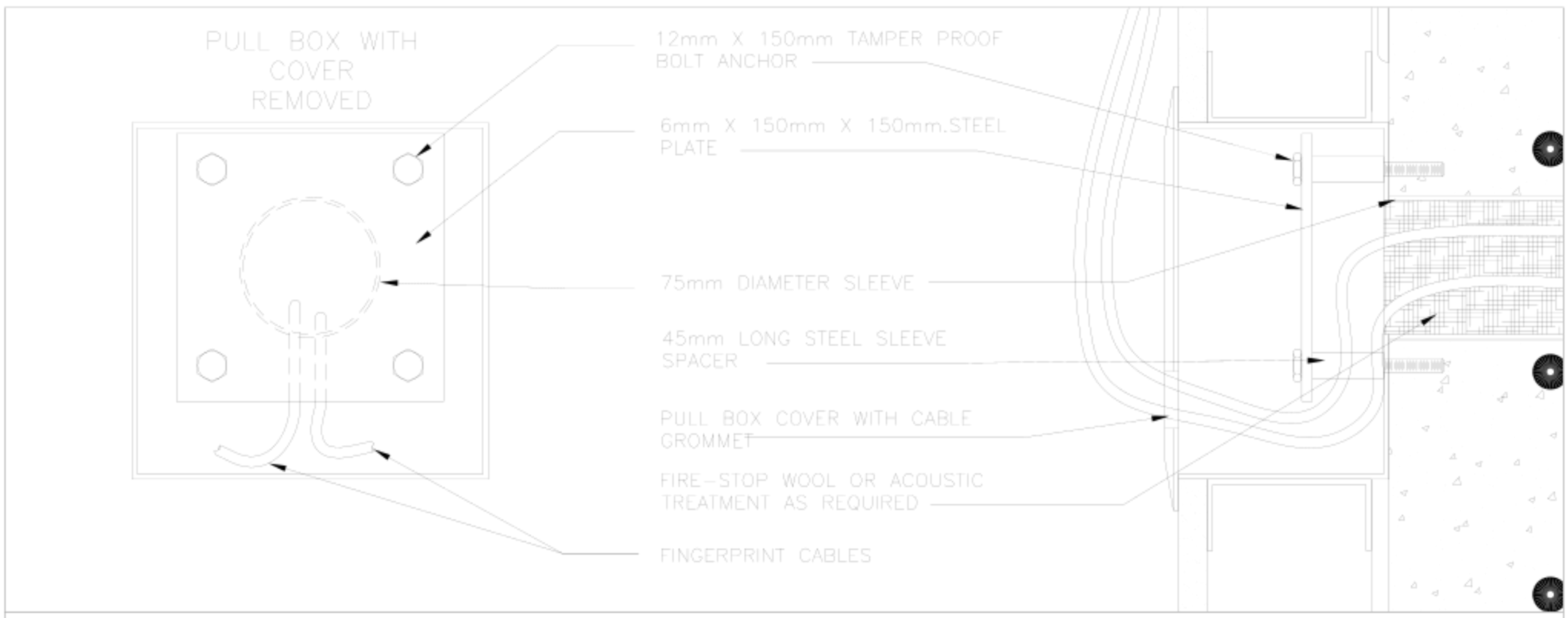


# FINGERPRINT STATION FE/BR CABLE PENETRATION

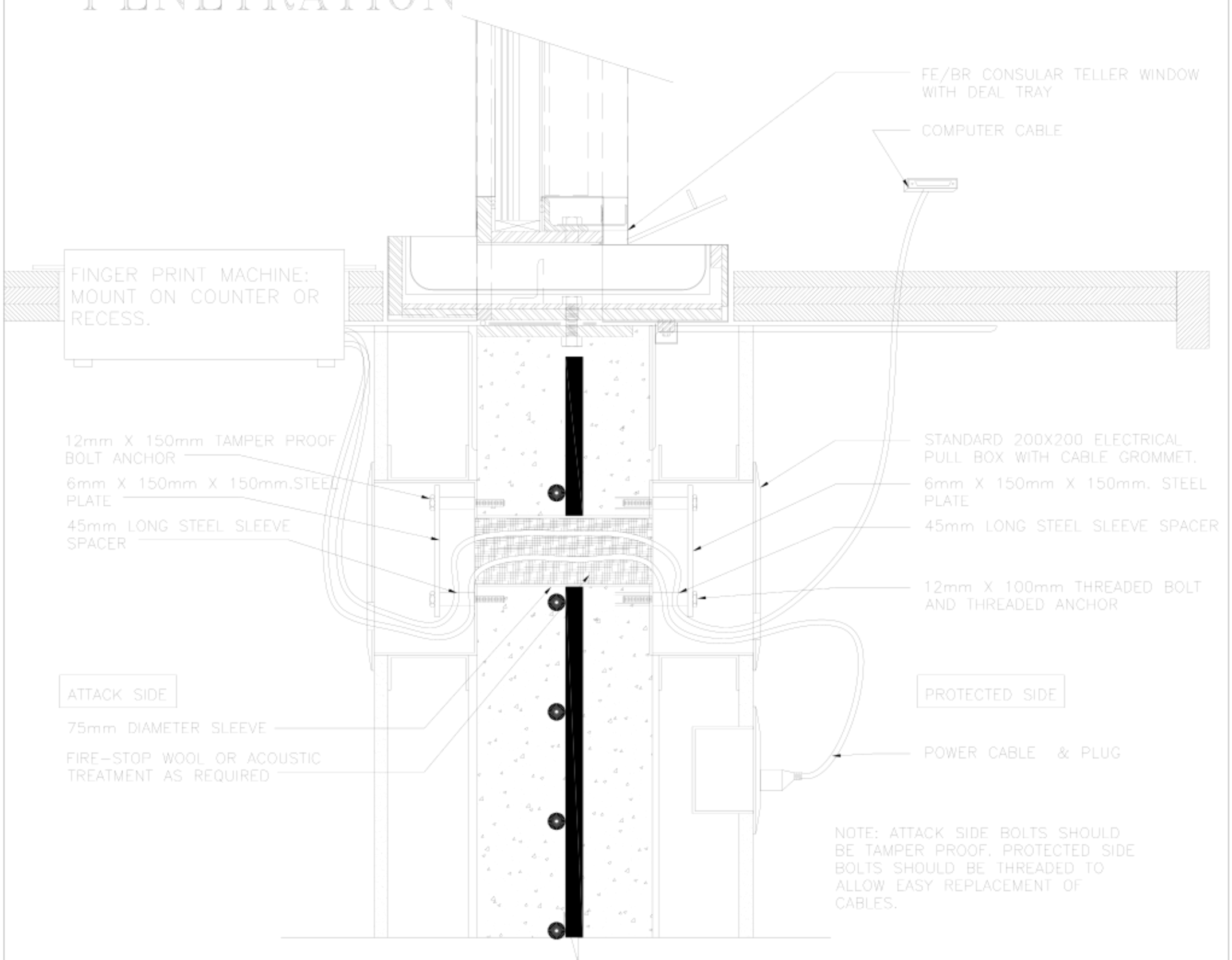


NOTE: ATTACK SIDE BOLTS SHOULD BE TAMPER PROOF. PROTECTED SIDE BOLTS SHOULD BE THREADED TO ALLOW EASY REPLACEMENT OF CABLES.

WARNING: This document is the property of the U.S. Government. Further reproduction and/or distribution outside the contractor team is prohibited without the express written approval of:

U.S. Department of State
ATTN:
Washington, DC 20520

U.S. Department of State

Office of Overseas Buildings Operations

FINGERPRINT STATION
BR PENETRATION DETAIL
PP-23-01

OBO/SEB Security Details

| | |
|---|---|
| DWG.TITLE: PP-23-01.dwg | |
| REV: | DATE: 10/30/06 |
| REV: | DATE: |
| SCALE: As Noted | SHEET: 2 of 2 |
| DRAWN BY: DPM/JJG | |
| DATE: January 2009 | SENSITIVE BUT UNCLASSIFIED |

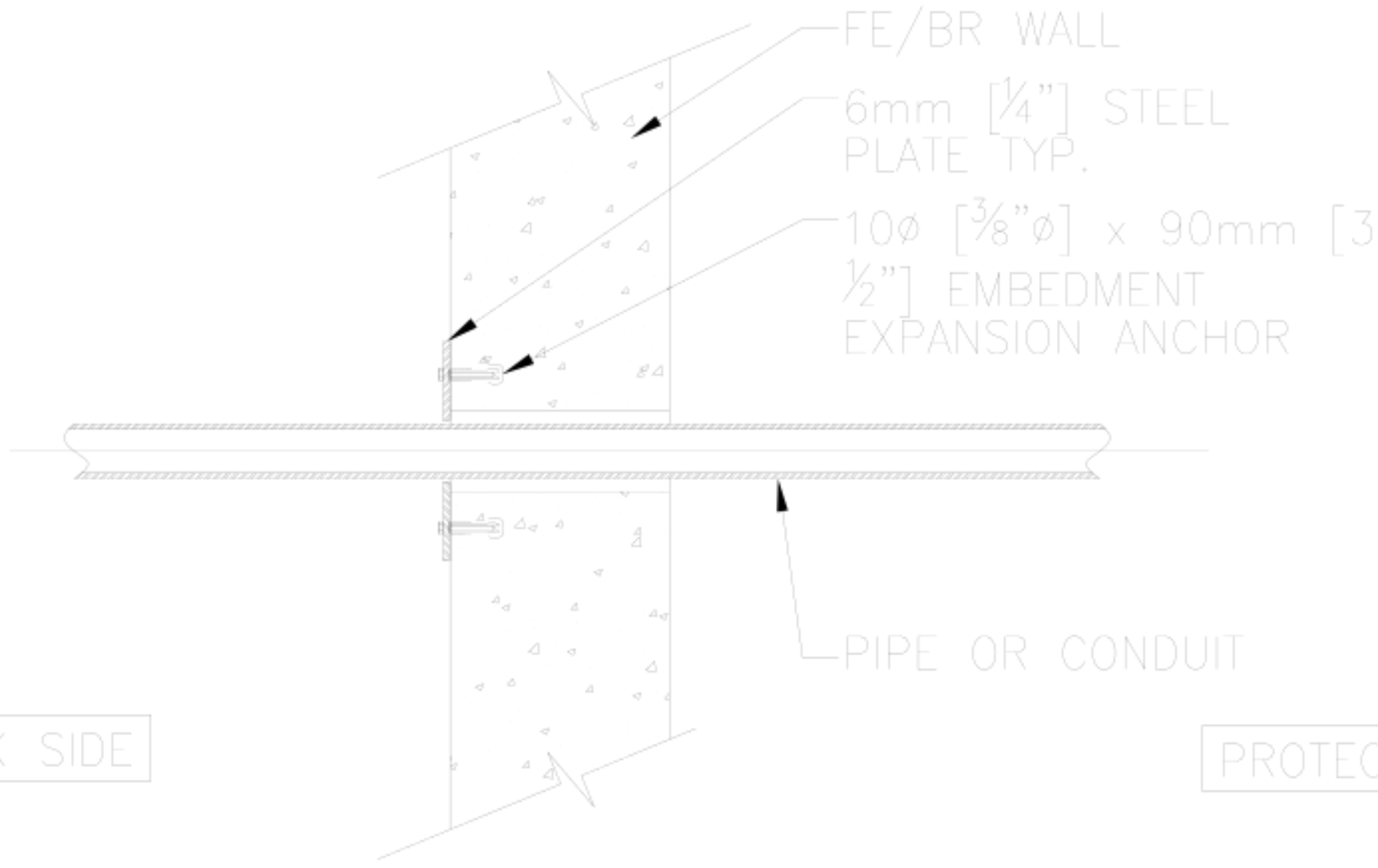


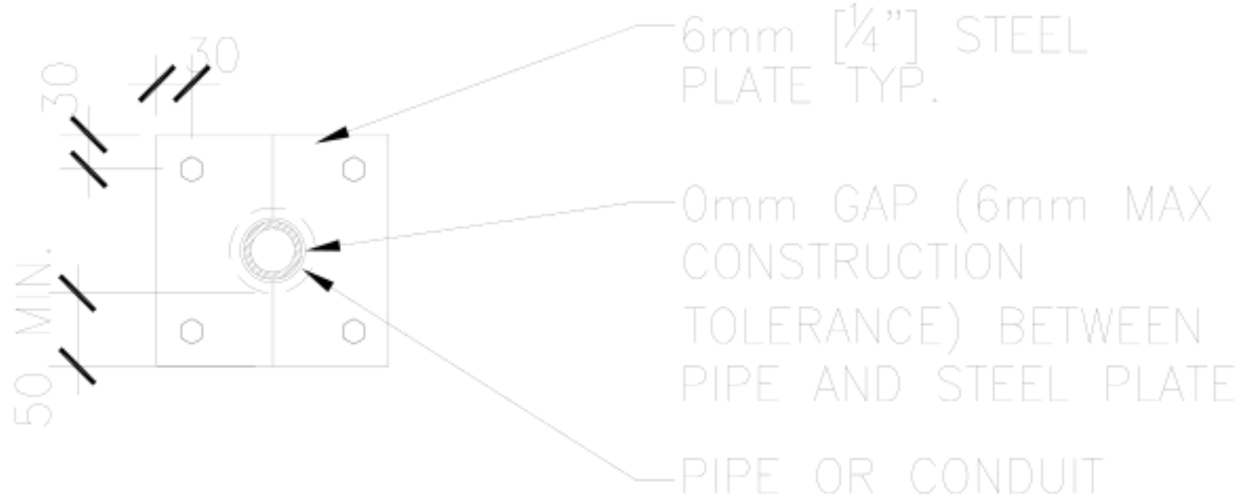


NOTES:

1) THIS DETAIL IS USED FOR BALLISTIC PROTECTION OF UNINSULATED PIPES AND CONDUIT IN 15 MINUTE HARDLINE WALLS.
2) DETAIL MUST BE USED ABOVE SUSPENDED CEILING.
3) DETAIL MUST BE USED FOR HORIZONTAL PENETRATIONS (NOT TO BE USED FOR VERTICAL PENETRATIONS AS SHOWN)
4) PENETRATION MUST BE LESS THAN 620 SQ CM.
5) DETAIL MUST NOT BE USED FOR "CORE" SPACES
6) PENETRATIONS WITH GAPS BETWEEN PIPE AND WALL CONSTRUCTION THAT DO NOT EXCEED 6MM DO NOT REQUIRE PROTECTION.

## 1 PIPE/CONDUIT PENETRATION

SCALE: N.T.S.

WARNING:
This document is the property of the U.S. Government. Further reproduction and/or distribution is prohibited without the express written permission of: Overseas Buildings Operations, U.S. Department of State, Washington, DC, 20522-0620. Information on this document is not to be altered except with the written approval of the individual whose seal appears hereon.

U.S. Department of State
Office of Overseas Buildings Operations

PIPE PENETRATION
PP-23-02

OBO/SEB Security Details

| | |
|---|---|
| DWG.TITLE: PP-23-02.dwg | |
| REV: | DATE: |
| REV: | DATE: |
| SCALE: N.T.S. | SHEET: 1 OF 2 |
| DRAWN BY: | |
| DATE: January 2012 | UNCLASSIFIED |

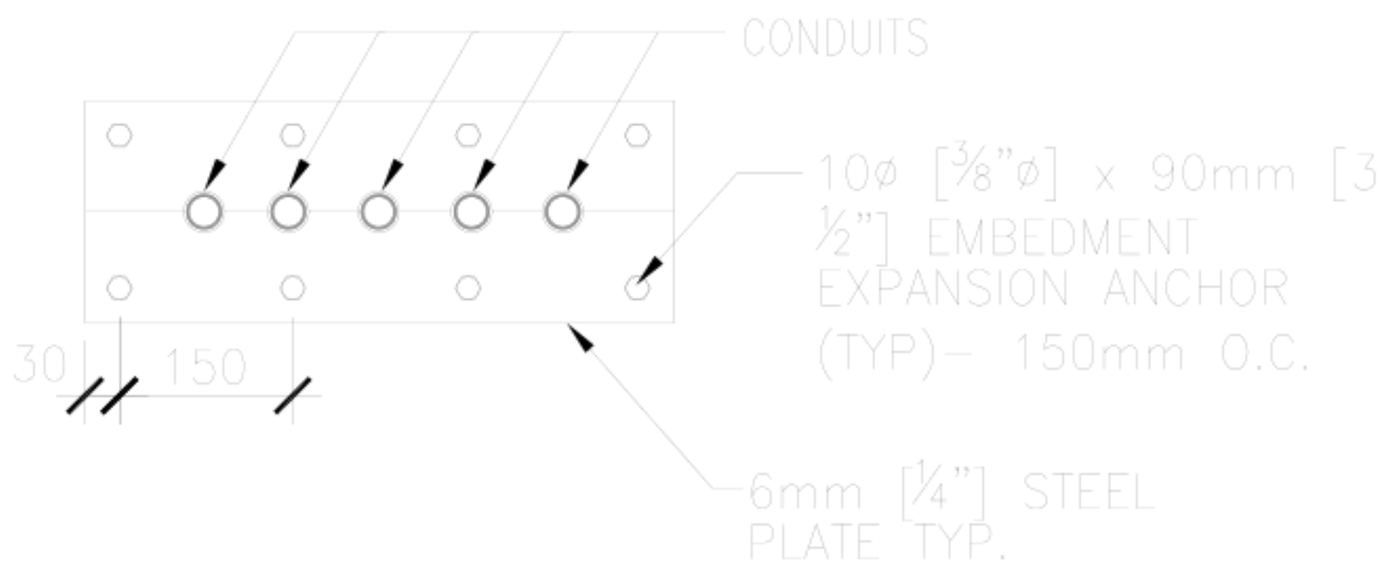


NOTES:

1) THIS DETAIL IS USED FOR BALLISTIC PROTECTION OF MULTIPLE PIPES AND CONDUITS THAT ARE IN HARDLINE WALL OR FLOORS.

2 ALTERNATE DETAIL

SCALE: N.T.S.

WARNING:
This document is the property of the U.S. Government. Further reproduction and/or distribution is prohibited without the express written permission of: Overseas Buildings Operations, U.S. Department of State, Washington, DC, 20522–0620. Information on this document is not to be altered except with the written approval of the individual whose seal appears hereon.

U.S. Department of State

Office of Overseas Buildings Operations

PIPE PENETRATION
PP–23–02

OBO/SEB Security Details

| | |
|---|---|
| DWG.TITLE: PP–23–02.dwg | |
| REV: | DATE: |
| REV: | DATE: |
| SCALE: N.T.S. | SHEET: 2 OF 2 |
| DRAWN BY: | |
| DATE: January 2009 | UNCLASSIFIED |

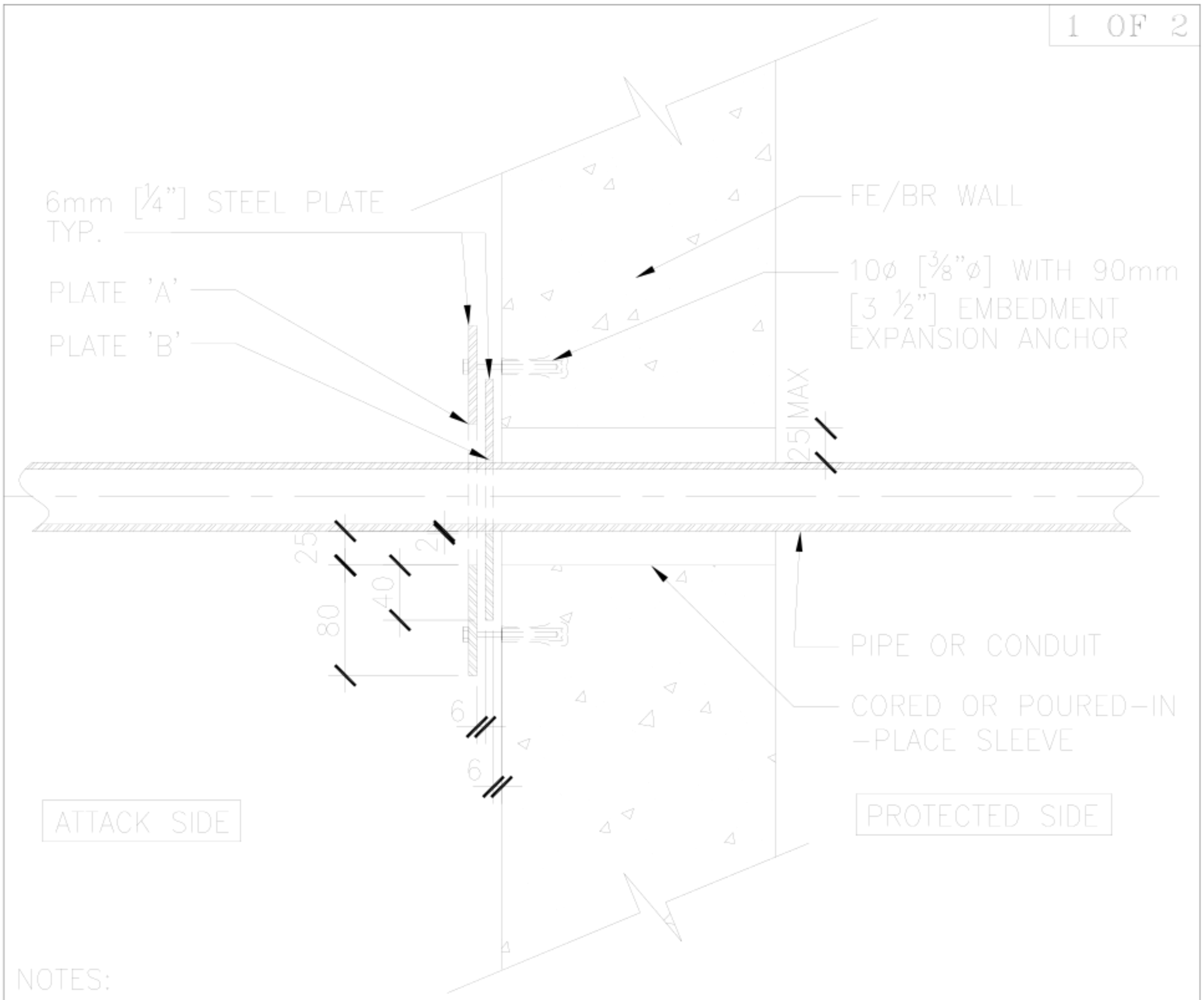


NOTES:

1) THIS DETAIL IS USED FOR 15 MINUTE BALLISTIC PROTECTION OF UNINSULATED PIPES AND CONDUITS IN HARDLINE WALL.
2) DETAIL MUST BE USED ABOVE SUSPENDED CEILING.
3) DETAIL MUST BE USED FOR HORIZONTAL PENETRATIONS (NOT TO BE USED FOR VERTICAL PENETRATIONS AS SHOWN)
4) PENETRATION MUST BE LESS THAN 620 SQ CM.
5) DETAIL CAN NOT BE USED FOR "CORE" SPACES.
6) PENETRATIONS WITH GAPS BETWEEN PIPE AND WALL CONSTRUCTION THAT DO NOT EXCEED 6MM DO NOT REQUIRE PROTECTION.

# 1 PIPE/CONDUIT PENETRATION

SCALE: N.T.S.

WARNING:
This document is the property of the U.S. Government. Further reproduction and/or distribution is prohibited without the express written permission of: Overseas Buildings Operations, U.S. Department of State, Washington, DC, 20522-0620. Information on this document is not to be altered except with the written approval of the individual whose seal appears hereon.

U.S. Department of State

Office of Overseas Buildings Operations

PIPE/CONDUIT PENETRATION
PP-23-03 - SEISMIC

OBO/SEB Security Details

| | |
|---|---|
| DWG.TITLE: PP-23-03.dwg | |
| REV: | DATE: |
| REV: | DATE: |
| SCALE: N.T.S. | SHEET: 1 OF 2 |
| DRAWN BY: | |
| DATE: January 2012 | UNCLASSIFIED |

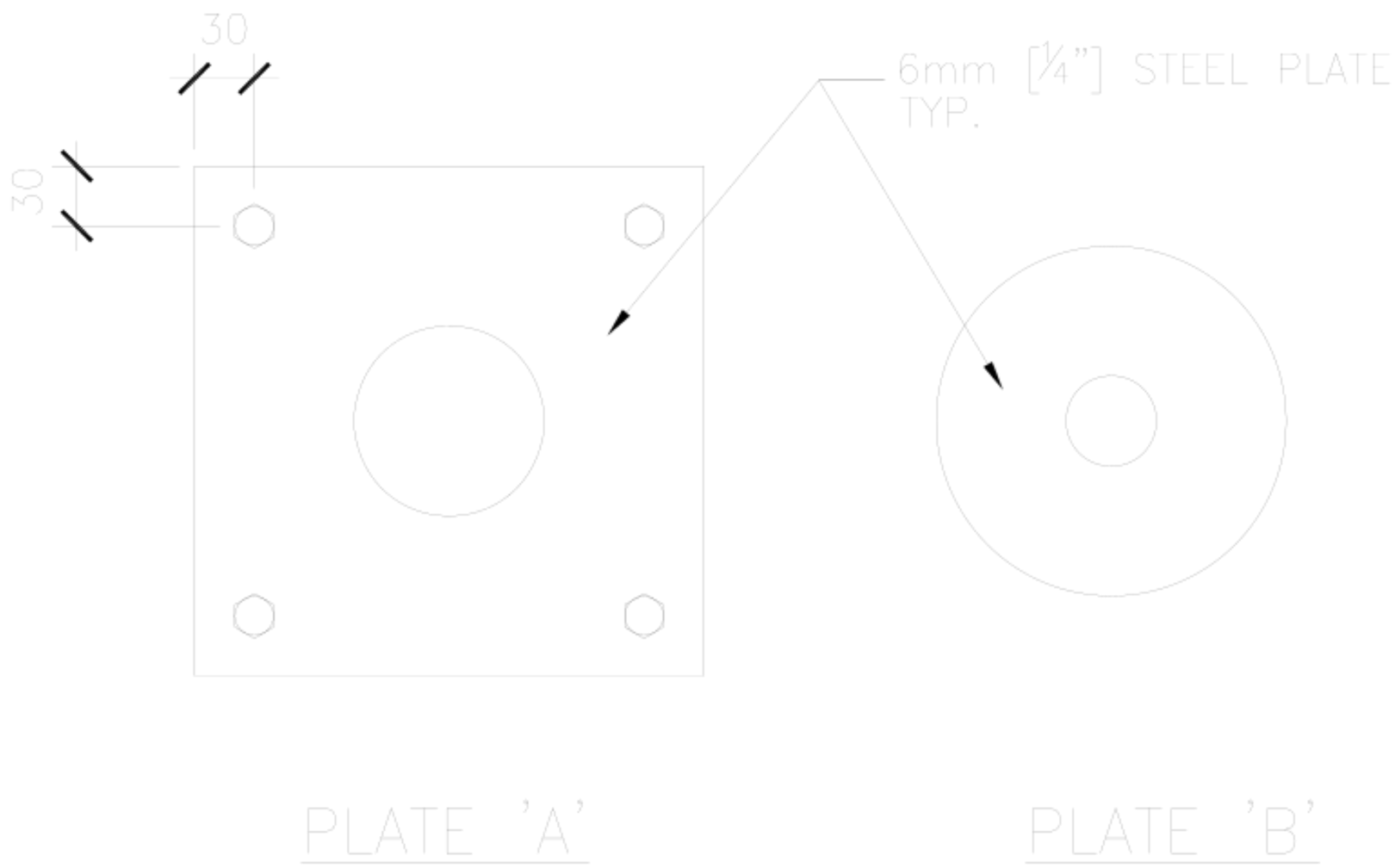


2 PIPE/CONDUIT PENETRATION

SCALE: N.T.S.

WARNING:
This document is the property of the U.S. Government. Further reproduction and/or distribution is prohibited without the express written permission of: Overseas Buildings Operations, U.S. Department of State, Washington, DC, 20522-0620. Information on this document is not to be altered except with the written approval of the individual whose seal appears hereon.

U.S. Department of State

Office of Overseas Buildings Operations

PIPE/CONDUIT PENETRATION
PP-23-03 - SEISMIC

OBO/SEB Security Details

| | |
|---|---|
| DWG.TITLE: PP-23-03.dwg | |
| REV: | DATE: |
| REV: | DATE: |
| SCALE: N.T.S. | SHEET: 2 OF 2 |
| DRAWN BY: | |
| DATE: January 2012 | UNCLASSIFIED |

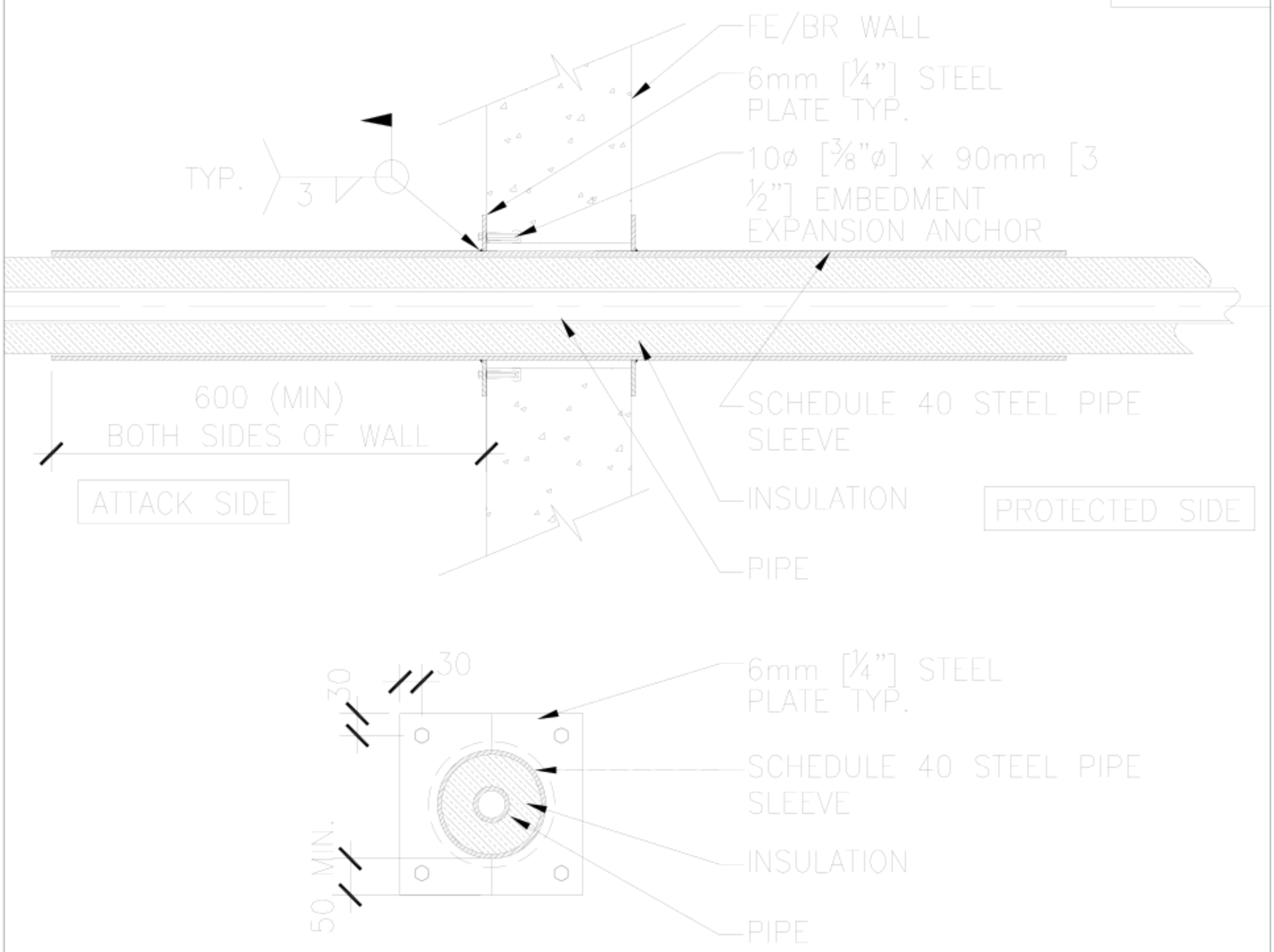


NOTES:

1) THIS DETAIL IS USED FOR BALLISTIC PROTECTION OF INSULATED PIPES IN 15 MINUTE HARDLINE WALLS
2) DETAIL MUST BE USED ABOVE SUSPENDED CEILING.
3) DETAIL MUST BE USED FOR HORIZONTAL PENETRATIONS (NOT TO BE USED FOR VERTICAL PENETRATIONS AS SHOWN)
4) PENETRATION MUST BE LESS THAN 620 SQ CM.
5) DETAIL MUST NOT BE USED FOR "CORE" SPACES

1 PIPE PENETRATION

SCALE: N.T.S.

WARNING:
This document is the property of the U.S. Government. Further reproduction and/or distribution is prohibited without the express written permission of: Overseas Buildings Operations, U.S. Department of State, Washington, DC, 20522-0620. Information on this document is not to be altered except with the written approval of the individual whose seal appears hereon.

U.S. Department of State

Office of Overseas Buildings Operations

PIPE PENETRATION WITH INSULATION PP-23-04

OBO/SEB Security Details

| | |
|---|---|
| DWG.TITLE: PP-23-04.dwg | |
| REV: | DATE: |
| REV: | DATE: |
| SCALE: N.T.S. | SHEET: 1 OF 1 |
| DRAWN BY: | |
| DATE: January 2012 | UNCLASSIFIED |

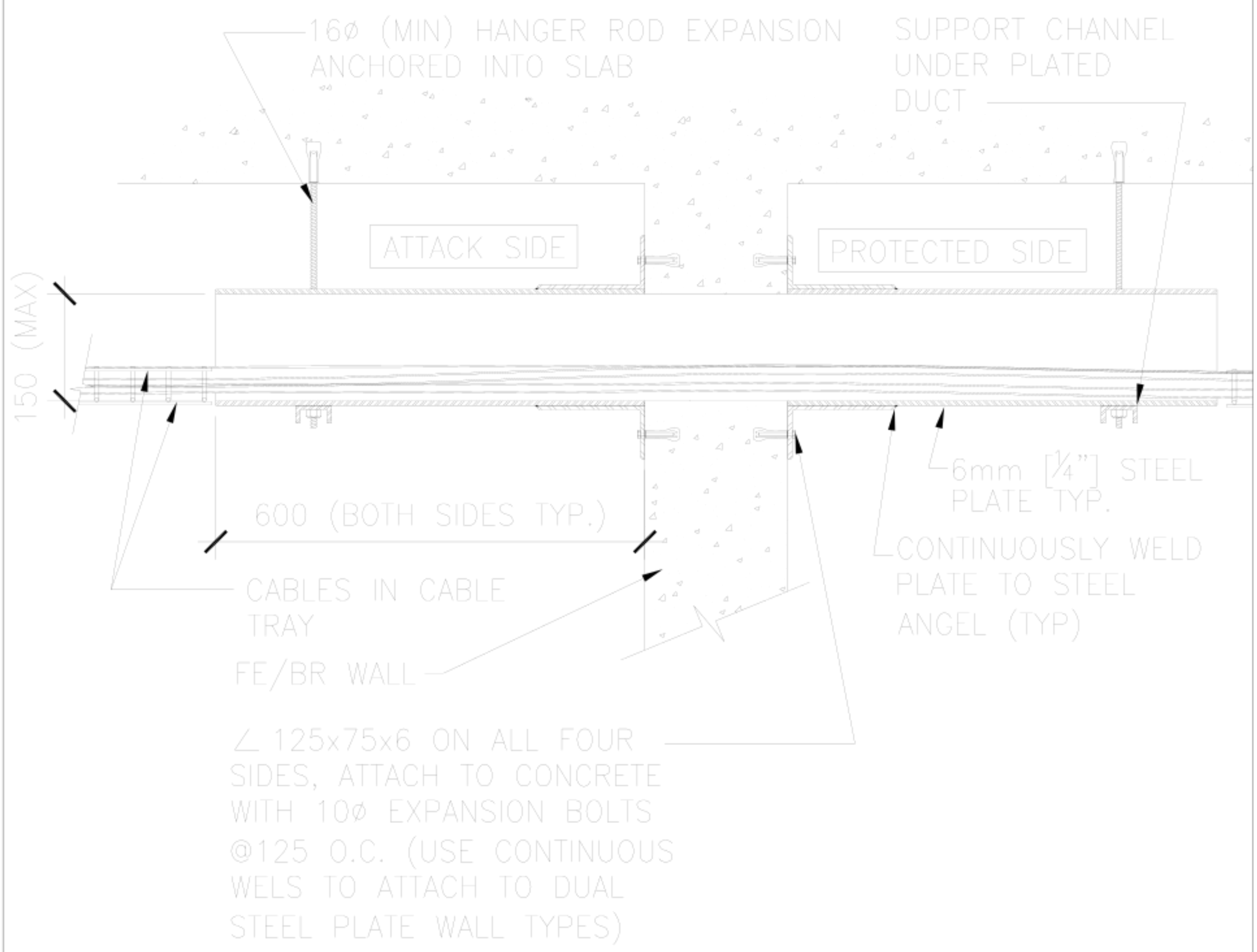


NOTES:

1) THIS DETAIL IS USED FOR BALLISTIC PROTECTION OF MULPIPLE PIPES IN HARDLINE WALL OR PIPES THAT REQUIRES INSULATION
2) DETAIL MUST BE USED ABOVE SUSPENDED CEILING.
3) DETAIL MUST BE USED FOR HORIZONTAL PENETRATIONS (NOT TO BE USED FOR VERTICAL PENETRATIONS AS SHOWN)
4) PENETRATION MUST BE LESS THAN 620 SQ CM.
5) DETAIL MUST NOT BE USED FOR "CORE" SPACES

# 1 CABLE TRAY PENETRATION

SCALE: N.T.S.

WARNING:
This document is the property of the U.S. Government. Further reproduction and/or distribution is prohibited without the express written permission of: Overseas Buildings Operations, U.S. Department of State, Washington, DC, 20522-0620. Information on this document is not to be altered except with the written approval of the individual whose seal appears hereon.

U.S. Department of State

Office of Overseas Buildings Operations

CABLE TRAY PENETRATION
PP-23-05

OBO/SEB Security Details

| | |
|---|---|
| DWG.TITLE: PP-23-05.dwg | |
| REV: | DATE: |
| REV: | DATE: |
| SCALE: N.T.S. | SHEET: 1 OF 1 |
| DRAWN BY: | |
| DATE: January 2009 | UNCLASSIFIED |

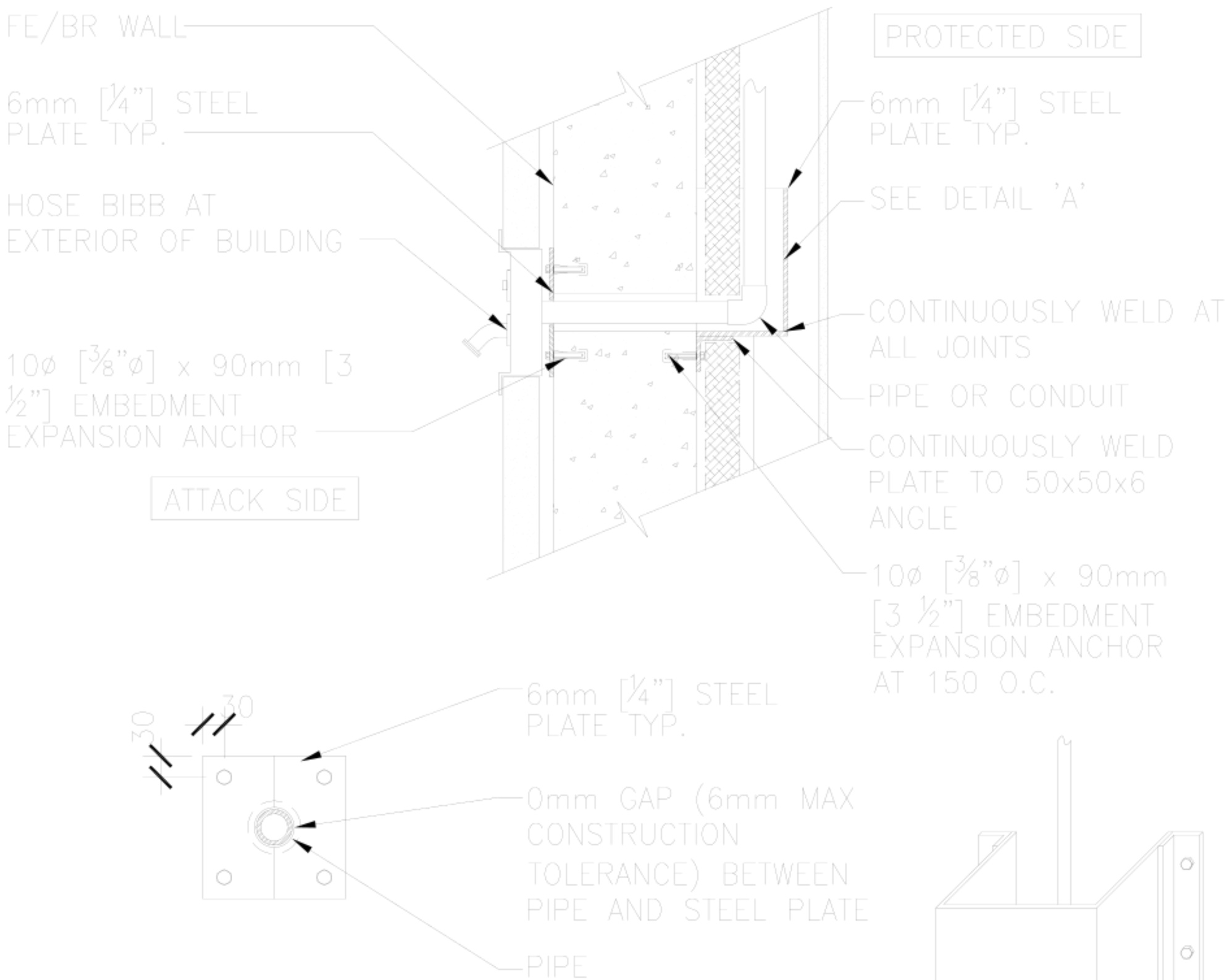


NOTES:
1) THIS DETAIL IS USED FOR BALLISTIC PROTECTION OF PIPES IN 15 MINUTE HARDLINE WALL.
2) PENETRATION MUST BE LESS THAN 620 SQ CM.

DETAIL 'A'

# 1 HOSE BIBB PENETRATION

SCALE: N.T.S.

WARNING:
This document is the property of the U.S. Government. Further reproduction and/or distribution is prohibited without the express written permission of: Overseas Buildings Operations, U.S. Department of State, Washington, DC, 20522-0620. Information on this document is not to be altered except with the written approval of the individual whose seal appears hereon.

U.S. Department of State
Office of Overseas Buildings Operations

HOSE BIBB PENETRATION
PP-23-06

OBO/SEB Security Details

| | |
|---|---|
| DWG.TITLE: PP-23-06.dwg | |
| REV: | DATE: |
| REV: | DATE: |
| SCALE: N.T.S. | SHEET: 1 OF 1 |
| DRAWN BY: | |
| DATE: January 2012 | UNCLASSIFIED |

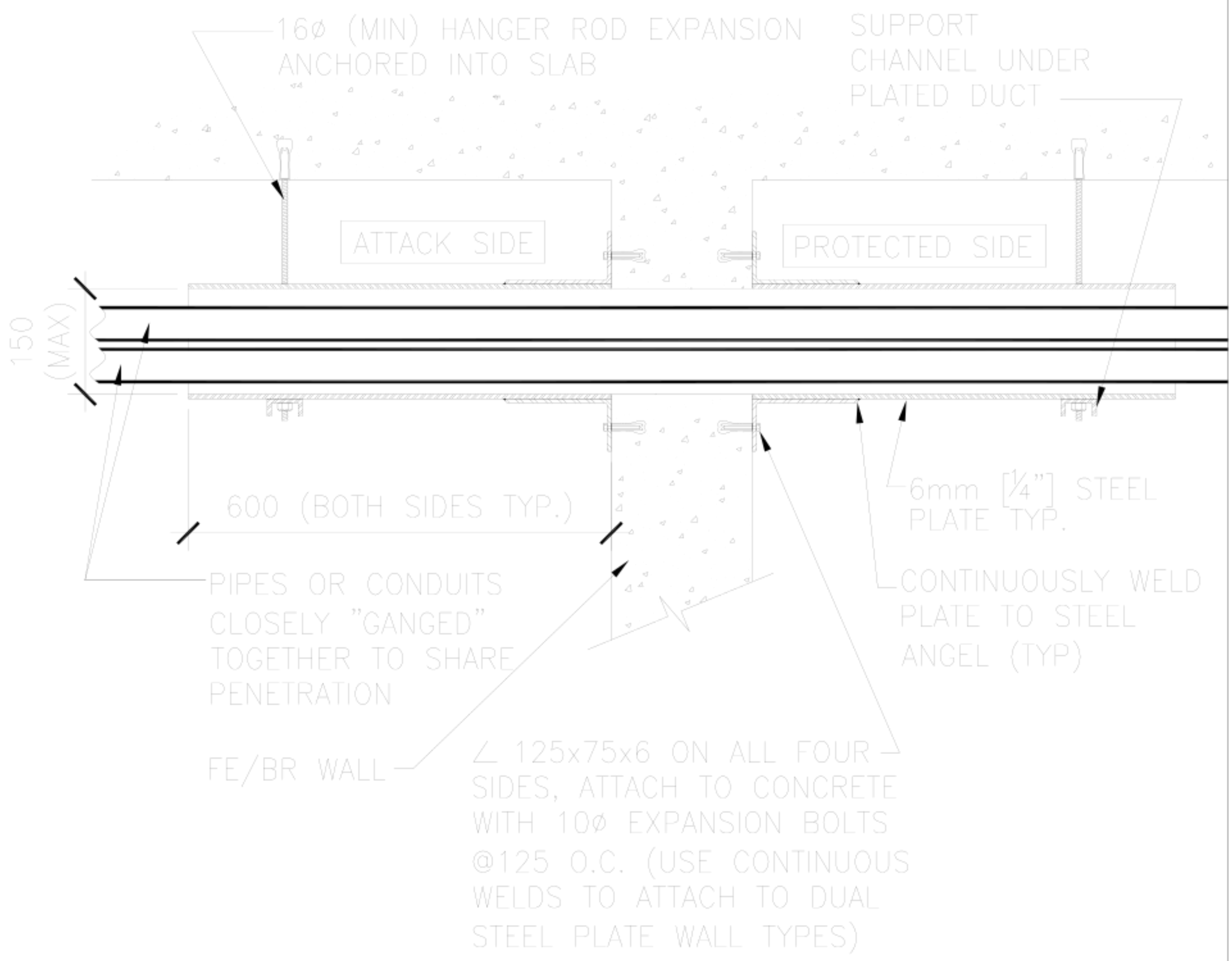


NOTES:

1) THIS DETAIL IS USED FOR BALLISTIC PROTECTION OF MULPIPLE PIPES IN HARDLINE WALL OR PIPES THAT REQUIRES INSULATION
2) DETAIL MUST BE USED ABOVE SUSPENDED CEILING.
3) DETAIL MUST BE USED FOR HORIZONTAL PENETRATIONS (NOT TO BE USED FOR VERTICAL PENETRATIONS AS SHOWN)
4) PENETRATION MUST BE LESS THAN 620 SQ CM.
5) DETAIL MUST NOT BE USED FOR "CORE" SPACES

1 GANGED PIPE PENETRATION

SCALE: N.T.S.

WARNING:
This document is the property of the U.S. Government. Further reproduction and/or distribution is prohibited without the express written permission of: Overseas Buildings Operations, U.S. Department of State, Washington, DC, 20522-0620. Information on this document is not to be altered except with the written approval of the individual whose seal appears hereon.

U.S. Department of State

Office of Overseas Buildings Operations

GANGED PIPE PENETRATION
PP-23-07

OBO/SEB Security Details

| | |
|---|---|
| DWG.TITLE: PP-23-07.dwg | |
| REV: | DATE: |
| REV: | DATE: |
| SCALE: N.T.S. | SHEET: 1 OF 1 |
| DRAWN BY: | |
| DATE: January 2009 | UNCLASSIFIED |

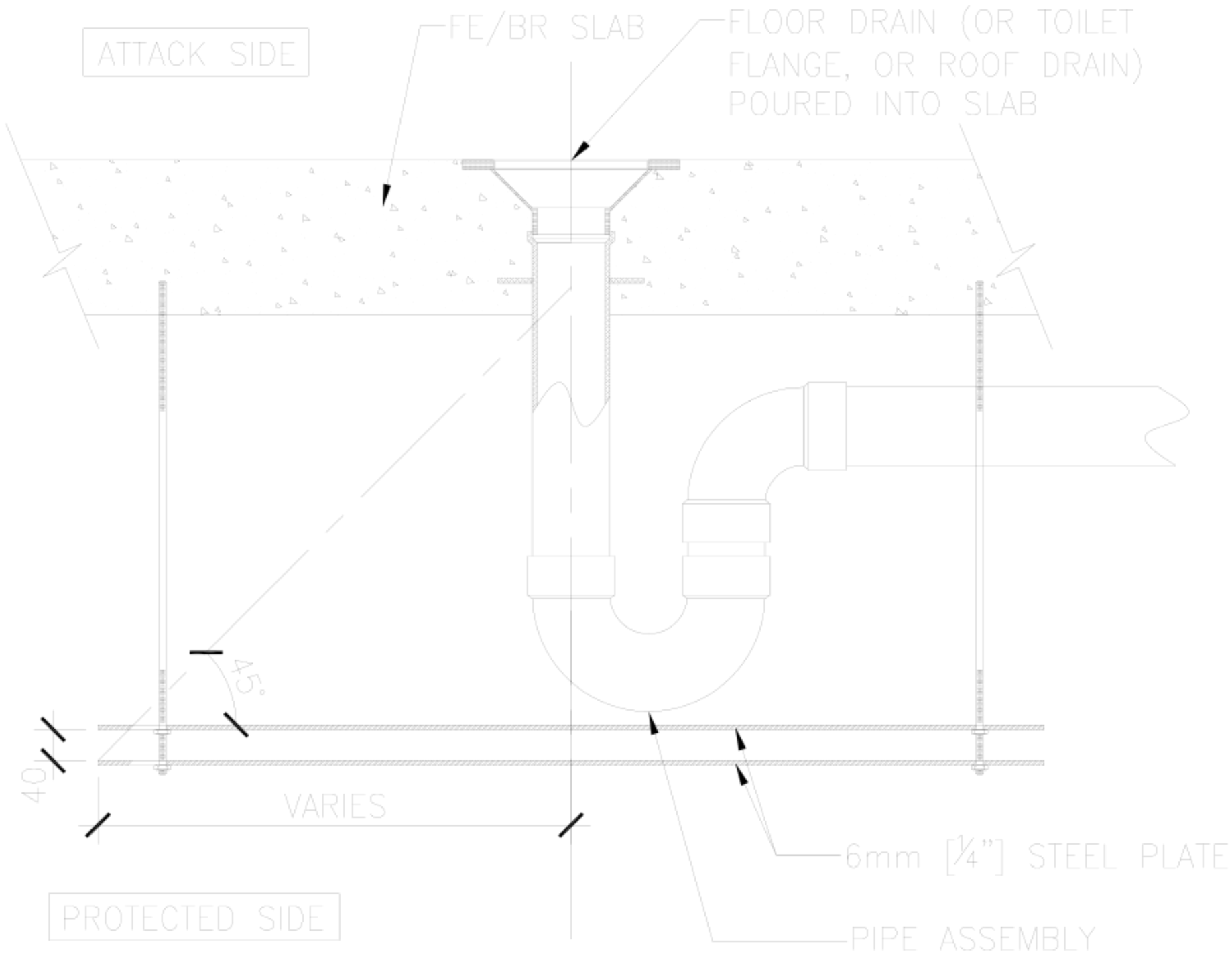


NOTES:

1) THIS DETAIL IS USED FOR BALLISTIC PROTECTION OF PIPES IN HARDLINE FLOORS AND ROOFS.

2) PENETRATION MUST BE LESS THAN 620 SQ CM.

3) DETAIL CAN BE USED FOR "CORE" SPACES FOR BR, BUT OTHER COUNTERMEASURES MAY BE REQUIRED.

1

# DRAIN PIPE PENETRATION

SCALE: N.T.S.

WARNING:
This document is the property of the U.S. Government. Further reproduction and/or distribution is prohibited without the express written permission of: Overseas Buildings Operations, U.S. Department of State, Washington, DC, 20522-0620. Information on this document is not to be altered except with the written approval of the individual whose seal appears hereon.

U.S. Department of State

Office of Overseas Buildings Operations

DRAIN PIPE PENETRATION
60 MINUTE PP-33-01

OBO/SEB Security Details

| | |
|---|---|
| DWG.TITLE: PP-33-01.dwg | |
| REV: | DATE: |
| REV: | DATE: |
| SCALE: N.T.S. | SHEET: 1 OF 1 |
| DRAWN BY: | |
| DATE: January 2009 | UNCLASSIFIED |

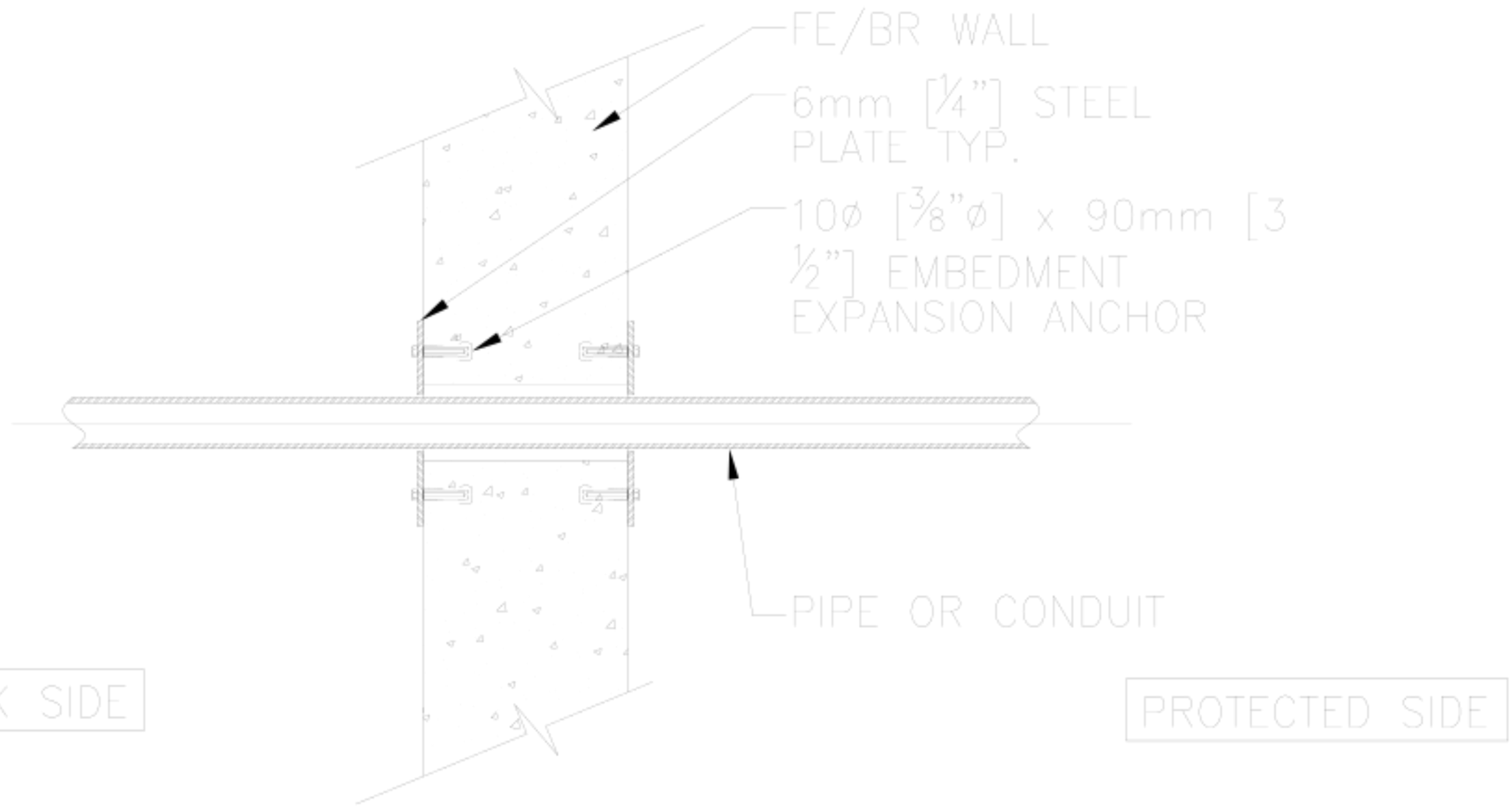


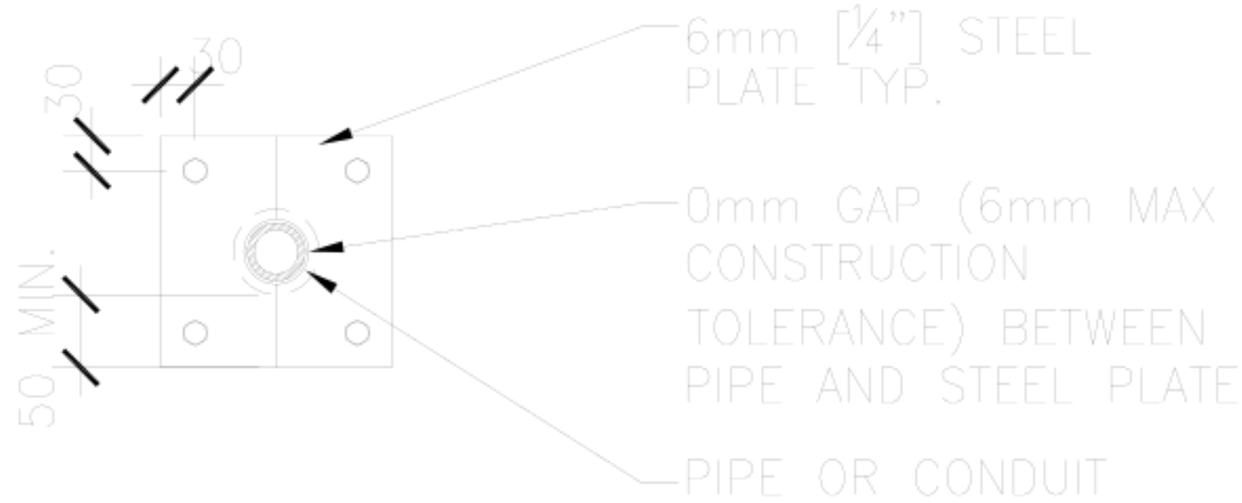


NOTES:

1) THIS DETAIL IS USED FOR BALLISTIC PROTECTION OF PIPES AND CONDUIT IN 60 MINUTE HARDLINE WALLS.

2) PENETRATION MUST BE LESS THAN 620 SQ CM.

3) DETAIL CAN BE USED FOR "CORE" SPACES FOR BR, BUT OTHER COUNTERMEASURES MAY BE REQUIRED.

4) PENETRATIONS WITH GAPS BETWEEN PIPE AND WALL CONSTRUCTION THAT DO NOT EXCEED 6MM DO NOT REQUIRE PROTECTION.

5) FOR ELECTRICAL APPLICATIONS, TRANSITION PENETRATION PIPE TO EMT MINIMUM 600MM FROM THE WALL, ON EACH SIDE.

## 1 PIPE/CONDUIT PENETRATION

SCALE: N.T.S.

WARNING:
This document is the property of the U.S. Government. Further reproduction and/or distribution is prohibited without the express written permission of: Overseas Buildings Operations, U.S. Department of State, Washington, DC, 20522-0620. Information on this document is not to be altered except with the written approval of the individual whose seal appears hereon.

U.S. Department of State

Office of Overseas Buildings Operations

PIPE PENETRATION 60 MINUTE
PP-33-02

OBO/SEB Security Details

| | |
|---|---|
| DWG.TITLE: PP-33-02.dwg | |
| REV: | DATE: |
| REV: | DATE: |
| SCALE: N.T.S. | SHEET: 1 OF 2 |
| DRAWN BY: | |
| DATE: January 2012 | UNCLASSIFIED |

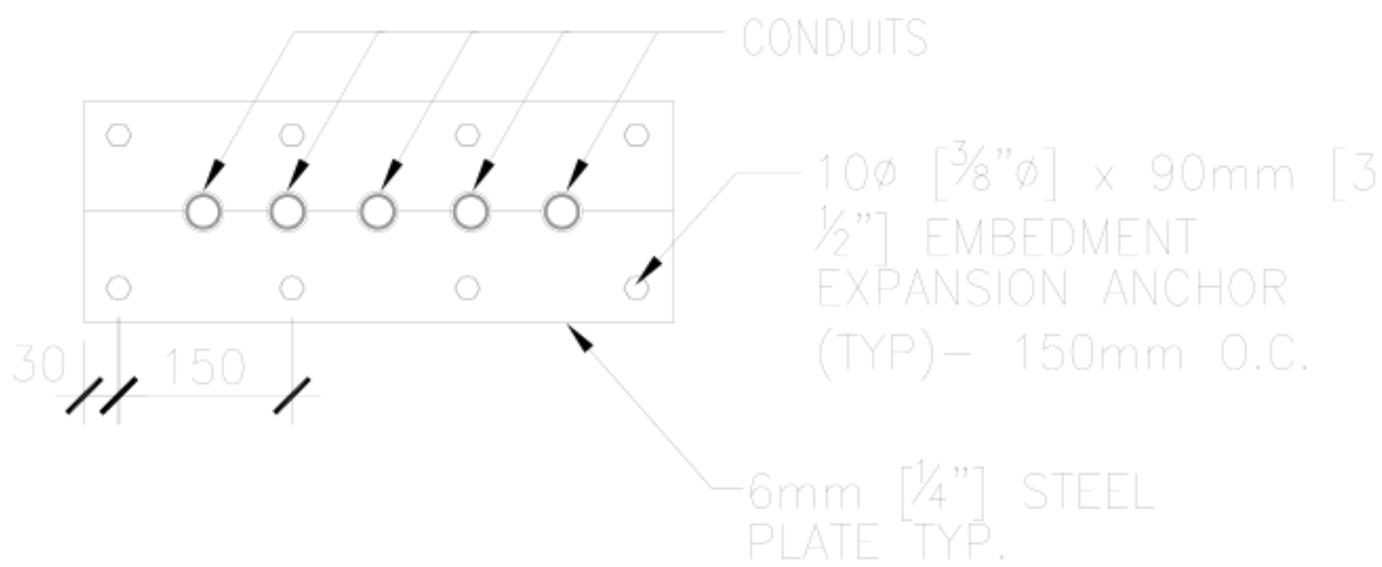


NOTES:

1) THIS DETAIL IS USED FOR BALLISTIC PROTECTION OF MULTIPLE PIPES AND CONDUITS THAT ARE IN HARDLINE WALL OR FLOORS.

## 2 MULTIPLE PENETRATION DETAIL

SCALE: N.T.S.

WARNING:
This document is the property of the U.S. Government. Further reproduction and/or distribution is prohibited without the express written permission of: Overseas Buildings Operations, U.S. Department of State, Washington, DC, 20522–0620. Information on this document is not to be altered except with the written approval of the individual whose seal appears hereon.

U.S. Department of State

Office of Overseas Buildings Operations

PIPE PENETRATION 60 MINUTE
PP–33–02

OBO/SEB Security Details

| | |
|---|---|
| DWG.TITLE: PP–33–02.dwg | |
| REV: | DATE: |
| REV: | DATE: |
| SCALE: N.T.S. | SHEET: 2 OF 2 |
| DRAWN BY: | |
| DATE: January 2009 | UNCLASSIFIED |

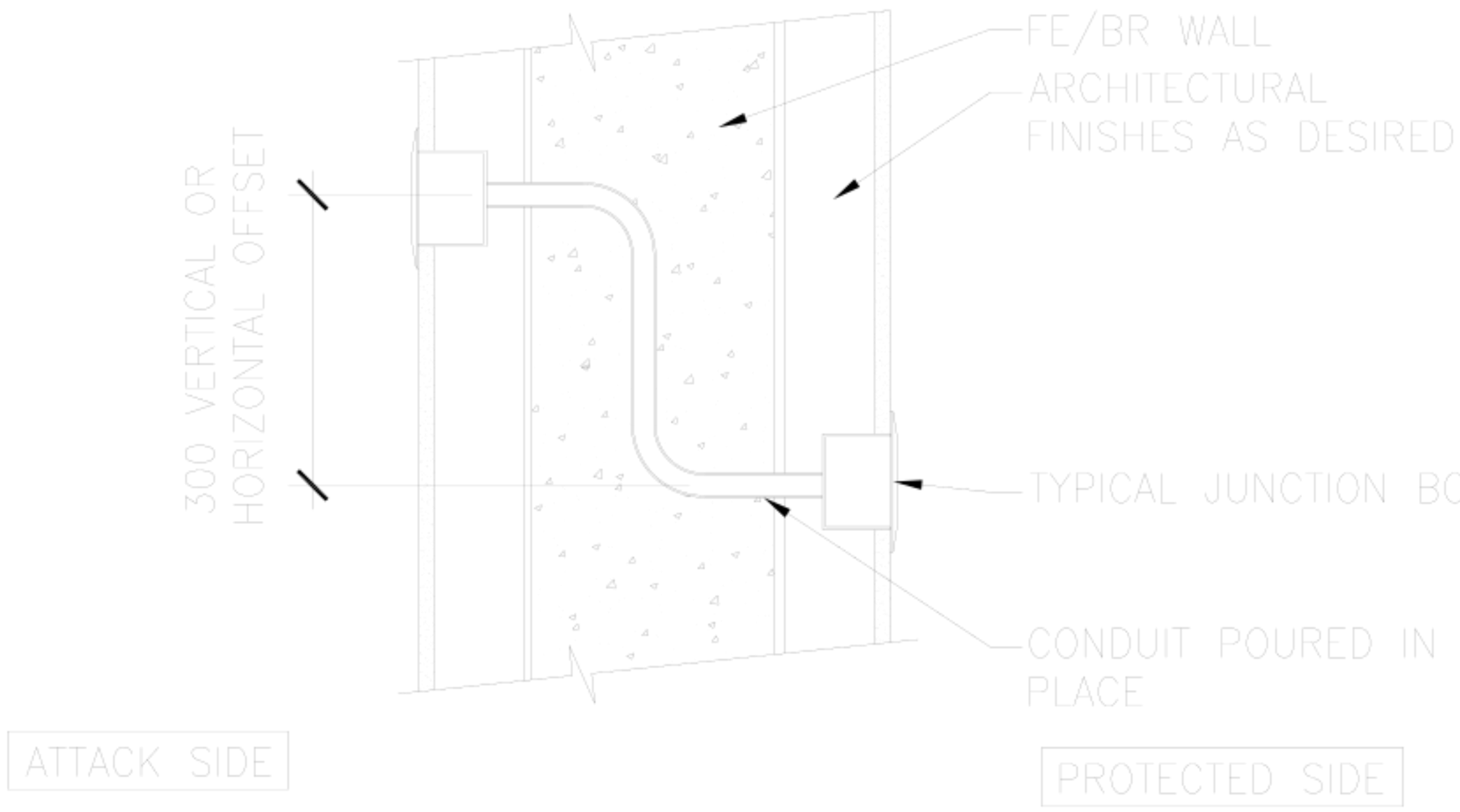


NOTES:
1) THIS DETAIL IS USED FOR BALLISTIC PROTECTION OF CONDUIT IN 60 MINUTE HARDLINE WALLS. (IE: KEYPADS, INTERCOM, ETC.)
2) PENETRATION MUST BE LESS THAN 620 SQ CM.
3) DETAIL CAN BE USED FOR "CORE" SPACES FOR BR, BUT OTHER COUNTERMEASURES MAY BE REQUIRED.

1 CONDUIT PENETRATION

SCALE: N.T.S.

WARNING:
This document is the property of the U.S. Government. Further reproduction and/or distribution is prohibited without the express written permission of: Overseas Buildings Operations, U.S. Department of State, Washington, DC, 20522-0620. Information on this document is not to be altered except with the written approval of the individual whose seal appears hereon.

U.S. Department of State

Office of Overseas Buildings Operations

CONDUIT PENETRATION IN 60 MINUTE WALL PP-33-03

OBO/SEB Security Details

| | |
|---|---|
| DWG.TITLE: PP-33-03.dwg | |
| REV: | DATE: |
| REV: | DATE: |
| SCALE: N.T.S. | SHEET: 1 OF 1 |
| DRAWN BY: | |
| DATE: January 2012 | UNCLASSIFIED |

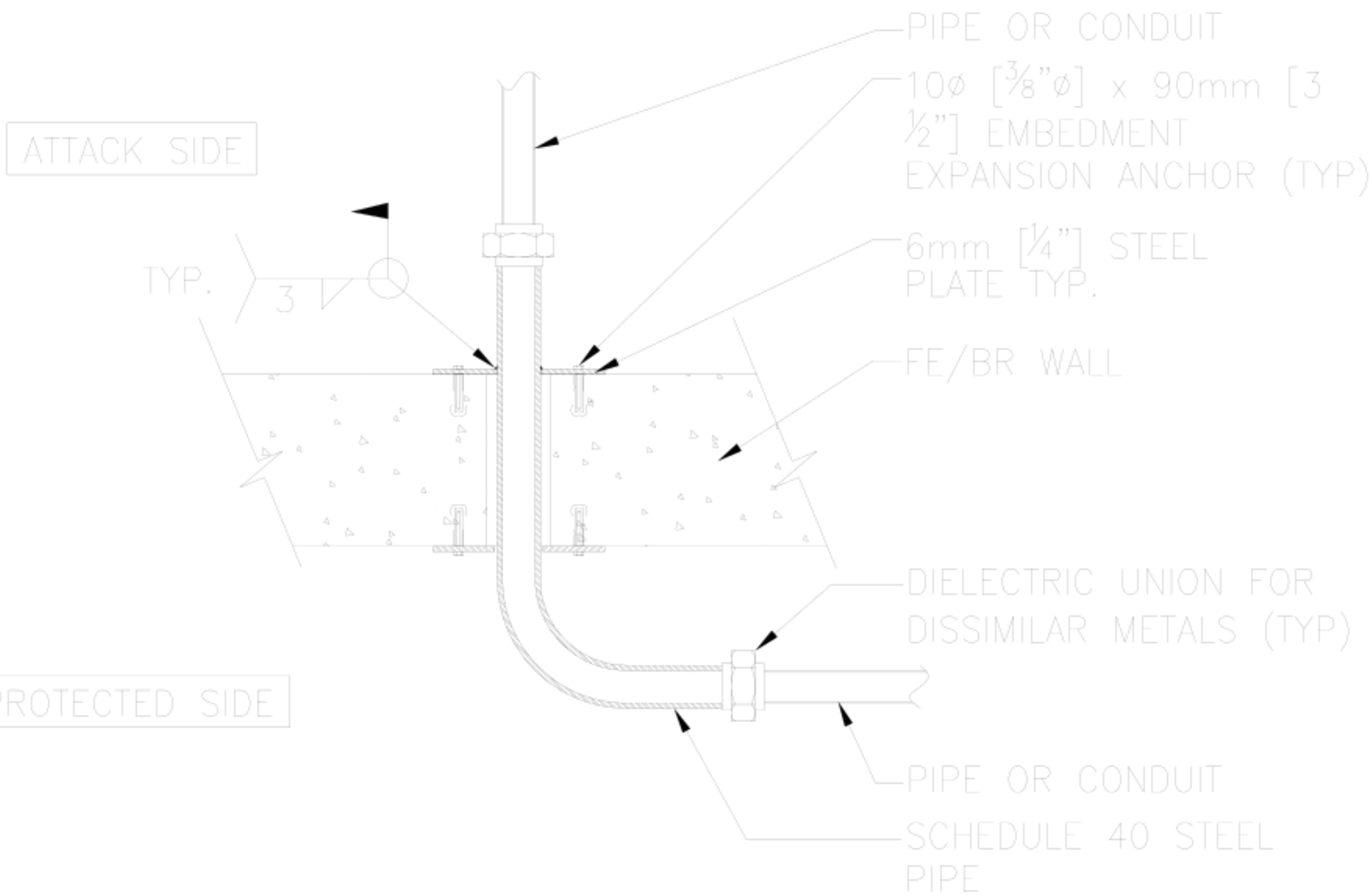


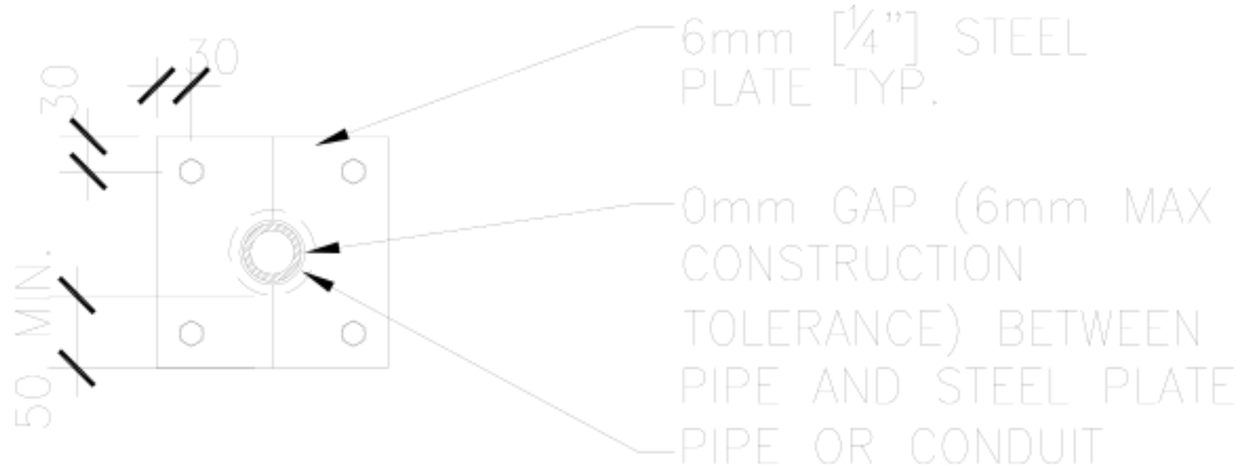


NOTES:

1) THIS DETAIL IS USED FOR BALLISTIC PROTECTION OF PIPES AND CONDUITS IN HARDLINE WALL OR FLOORS.

2) PENETRATION MUST BE LESS THAN 620 SQ CM.

3) DETAIL CAN BE USED FOR "CORE" SPACES FOR BR, BUT OTHER COUNTERMEASURES MAY BE REQUIRED.

4) PENETRATIONS WITH GAPS BETWEEN PIPE AND WALL CONSTRUCTION THAT DO NOT EXCEED 6MM DO NOT REQUIRE PROTECTION.

1 PIPE PENETRATION

SCALE: N.T.S.

WARNING:
This document is the property of the U.S. Government. Further reproduction and/or distribution is prohibited without the express written permission of: Overseas Buildings Operations, U.S. Department of State, Washington, DC, 20522-0620. Information on this document is not to be altered except with the written approval of the individual whose seal appears hereon.

U.S. Department of State

Office of Overseas Buildings Operations

VERTICAL PIPE PENETRATION
60 MINUTE PP-33-04

OBO/SEB Security Details

| | |
|---|---|
| DWG.TITLE: PP-33-04.dwg | |
| REV: | DATE: |
| REV: | DATE: |
| SCALE: N.T.S. | SHEET: 1 OF 2 |
| DRAWN BY: | |
| DATE: January 2011 | UNCLASSIFIED |

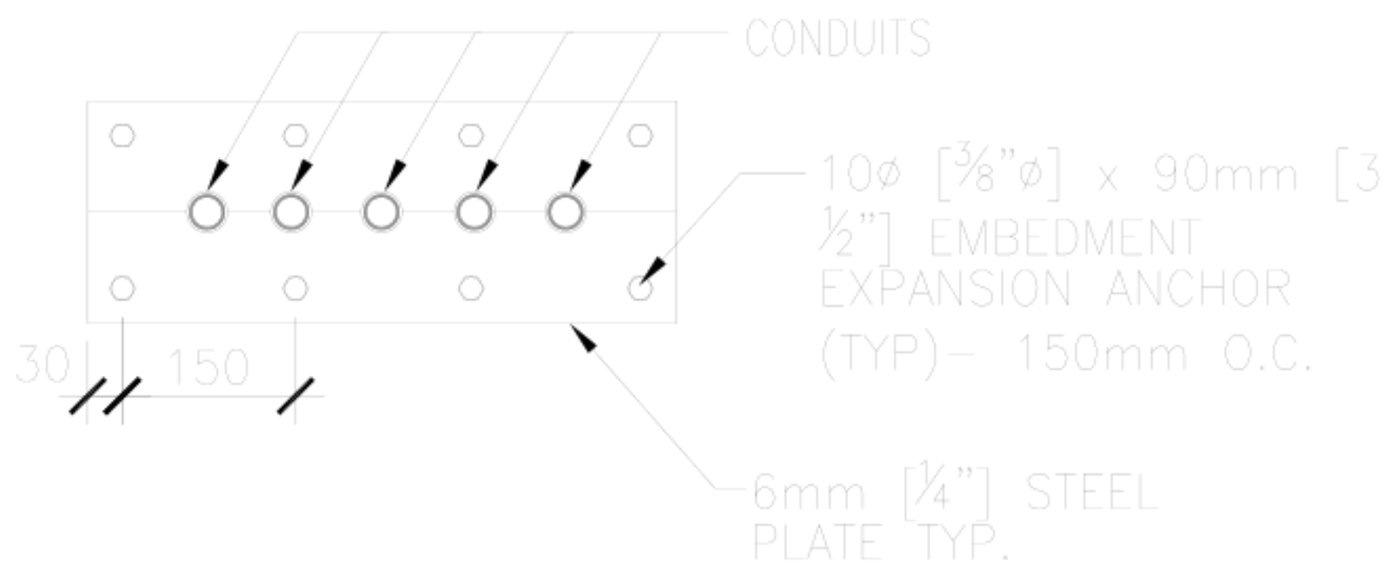


NOTES:
1) THIS DETAIL IS USED FOR BALLISTIC PROTECTION OF MULTIPLE PIPES AND CONDUITS THAT ARE IN HARDLINE WALL OR FLOORS.

## 2 ALTERNATE DETAIL

SCALE: N.T.S.

WARNING:
This document is the property of the U.S. Government. Further reproduction and/or distribution is prohibited without the express written permission of: Overseas Buildings Operations, U.S. Department of State, Washington, DC, 20522-0620. Information on this document is not to be altered except with the written approval of the individual whose seal appears hereon.

U.S. Department of State
Office of Overseas Buildings Operations

VERTICAL PIPE PENETRATION
60 MINUTE PP-33-04

OBO/SEB Security Details

| | |
|---|---|
| DWG.TITLE: PP-33-04.dwg | |
| REV: | DATE: |
| REV: | DATE: |
| SCALE: N.T.S. | SHEET: 2 OF 2 |
| DRAWN BY: | |
| DATE: January 2009 | UNCLASSIFIED |

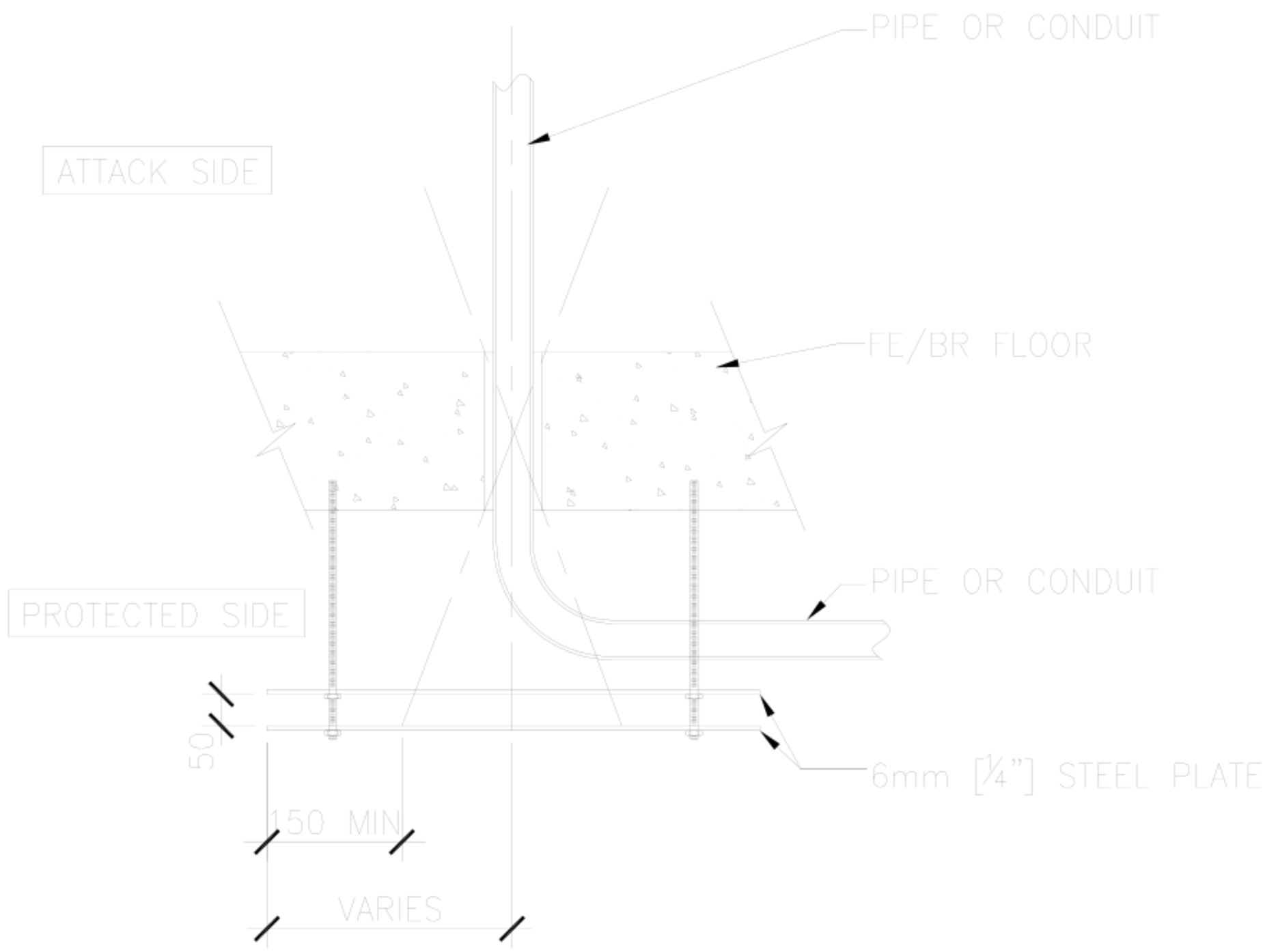


NOTES:
1) THIS DETAIL IS USED FOR BALLISTIC PROTECTION OF PIPES AND CONDUITS IN HARDLINE WALL OR FLOORS.
2) PENETRATION MUST BE LESS THAN 620 SQ CM.
3) DETAIL CAN BE USED FOR "CORE" SPACES FOR BR, BUT OTHER COUNTERMEASURES MAY BE REQUIRED.

1 VERTICAL PIPE PENETRATION

SCALE: N.T.S.

WARNING:
This document is the property of the U.S. Government. Further reproduction and/or distribution is prohibited without the express written permission of: Overseas Buildings Operations, U.S. Department of State, Washington, DC, 20522-0620. Information on this document is not to be altered except with the written approval of the individual whose seal appears hereon.

U.S. Department of State

Office of Overseas Buildings Operations

VERTICAL PIPE PENETRATION
60 MINUTE PP-33-05

OBO/SEB Security Details

| | |
|---|---|
| DWG.TITLE: PP-33-05.dwg | |
| REV: | DATE: |
| REV: | DATE: |
| SCALE: N.T.S. | SHEET: 1 OF 1 |
| DRAWN BY: | |
| DATE: January 2011 | UNCLASSIFIED |

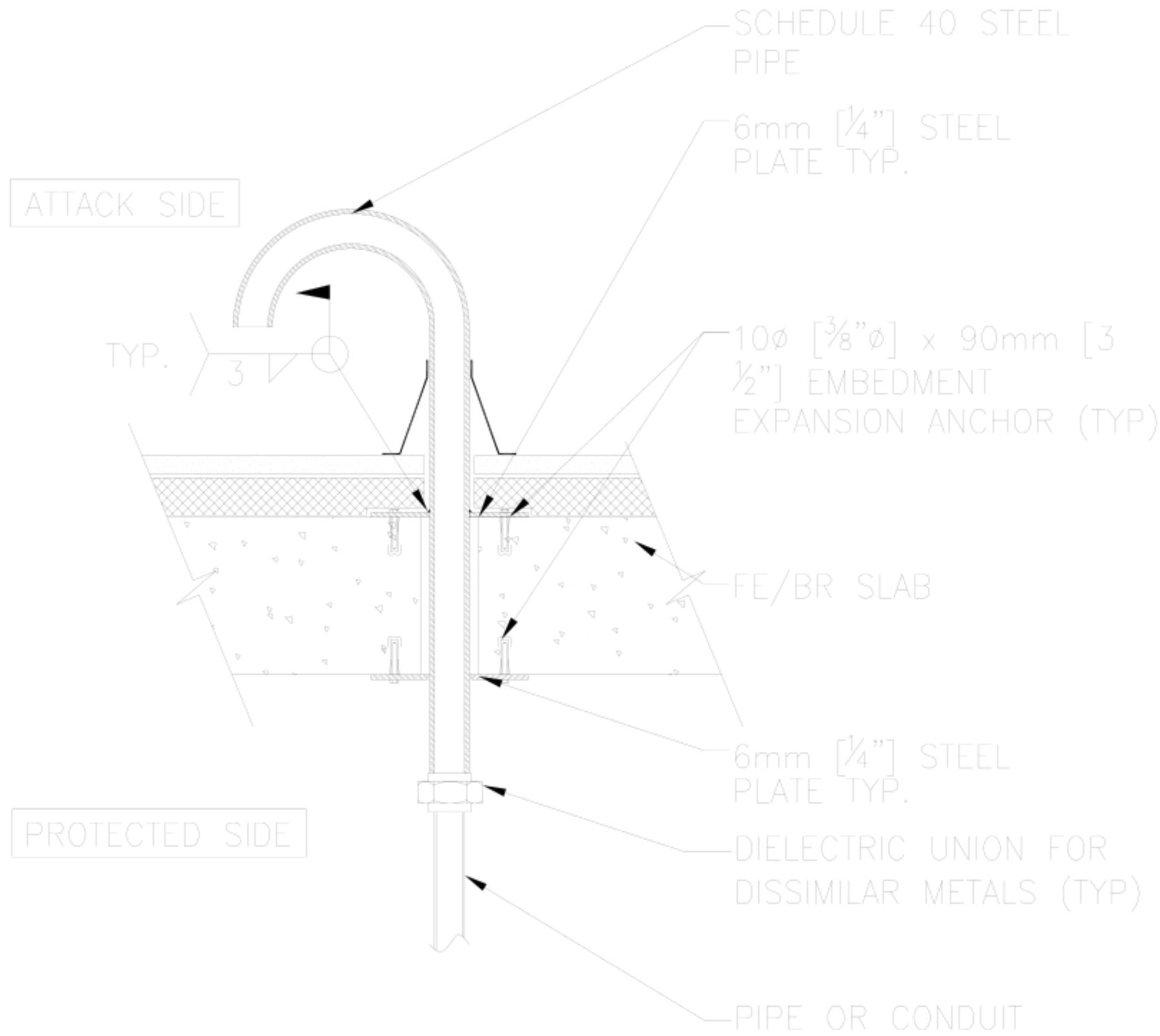


NOTES:

1) THIS DETAIL IS USED FOR BALLISTIC PROTECTION OF PIPES AND CONDUITS IN HARDLINE ROOFS.

2) PENETRATION MUST BE LESS THAN 620 SQ CM.

3) DETAIL CAN BE USED FOR "CORE" SPACES FOR BR, BUT OTHER COUNTERMEASURES MAY BE REQUIRED.

6) PENETRATIONS WITH GAPS BETWEEN PIPE AND WALL CONSTRUCTION THAT DO NOT EXCEED 6MM DO NOT REQUIRE PROTECTION.

## 1 GOOSENECK PIPE DETAIL

SCALE: N.T.S.

WARNING:
This document is the property of the U.S. Government. Further reproduction and/or distribution is prohibited without the express written permission of: Overseas Buildings Operations, U.S. Department of State, Washington, DC, 20522-0620. Information on this document is not to be altered except with the written approval of the individual whose seal appears hereon.

U.S. Department of State

Office of Overseas Buildings Operations

GOOSENECK PENETRATION
60 MINUTE PP-33-06

OBO/SEB Security Details

| | |
|---|---|
| DWG.TITLE: PP-33-06.dwg | |
| REV: | DATE: |
| REV: | DATE: |
| SCALE: N.T.S. | SHEET: 1 OF 2 |
| DRAWN BY: | |
| DATE: January 2011 | UNCLASSIFIED |

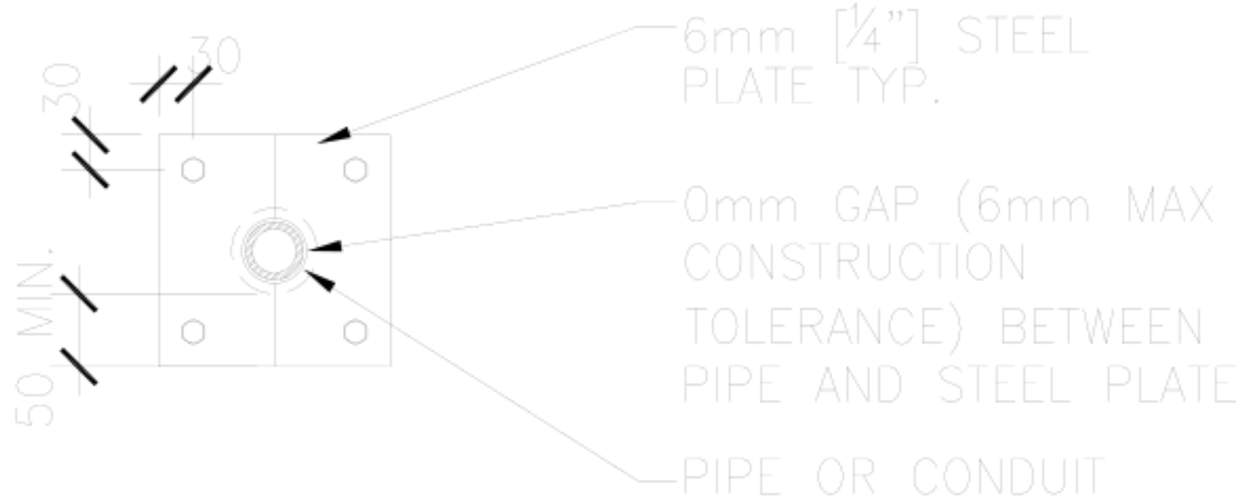


## 2 TYPICAL DETAIL

SCALE: N.T.S.

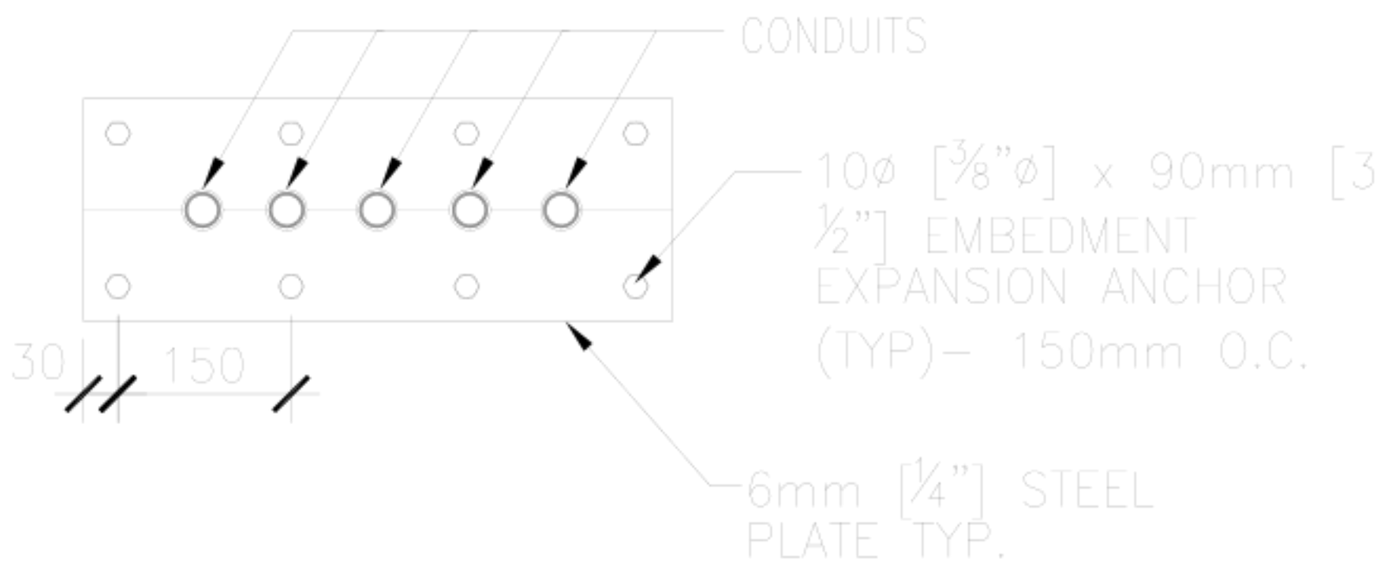


NOTES:

1) THIS DETAIL IS USED FOR BALLISTIC PROTECTION OF MULTIPLE PIPES AND CONDUITS THAT ARE IN HARDLINE WALL OR FLOORS.

## 3 ALTERNATE DETAIL

SCALE: N.T.S.

WARNING:
This document is the property of the U.S. Government. Further reproduction and/or distribution is prohibited without the express written permission of: Overseas Buildings Operations, U.S. Department of State, Washington, DC, 20522–0620. Information on this document is not to be altered except with the written approval of the individual whose seal appears hereon.

U.S. Department of State

Office of Overseas Buildings Operations

GOOSENECK PENETRATION
60 MINUTE PP–33–06

OBO/SEB Security Details

| | |
|---|---|
| DWG.TITLE: PP–33–06.dwg | |
| REV: | DATE: |
| REV: | DATE: |
| SCALE: N.T.S. | SHEET: 2 OF 2 |
| DRAWN BY: | |
| DATE: January 2008 | UNCLASSIFIED |

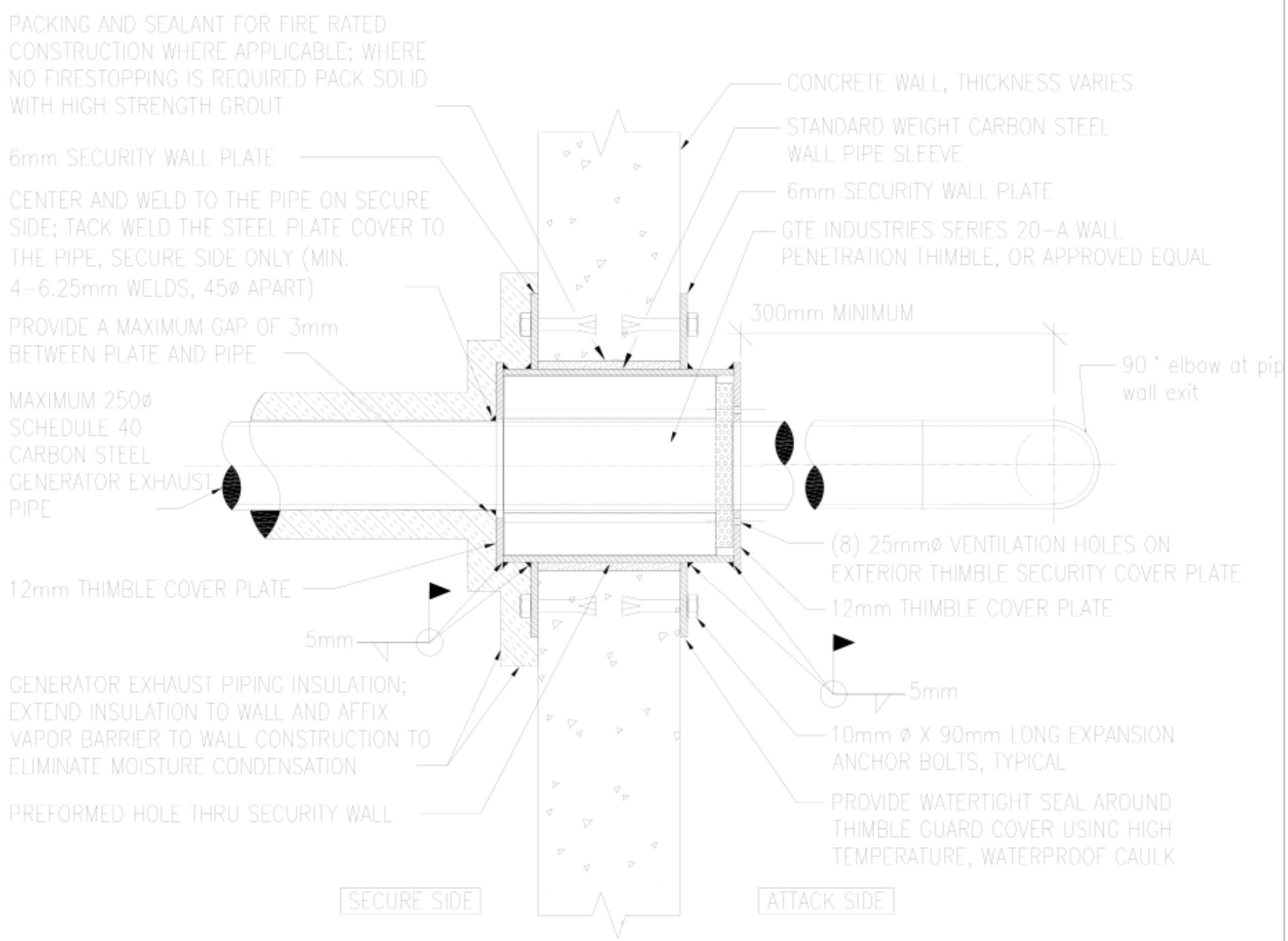


NOTES:

1) THIS DETAIL IS USED FOR BALLISTIC PROTECTION OF PIPES AND CONDUITS IN HARDLINE WALLS AND ROOFS. DESIGNER MUST INCORPORATE WEATHER PROTECTION INTO DETAIL.

2) PENETRATION MUST BE LESS THAN 620 SQ CM.

3) PENETRATIONS WITH GAPS BETWEEN PIPE AND WALL CONSTRUCTION THAT DO NOT EXCEED 6MM DO NOT REQUIRE PROTECTION.

## 1 GENERATOR EXHAUST DETAIL

SCALE: N.T.S.

WARNING:
This document is the property of the U.S. Government. Further reproduction and/or distribution is prohibited without the express written permission of: Overseas Buildings Operations, U.S. Department of State, Washington, DC, 20522-0620. Information on this document is not to be altered except with the written approval of the individual whose seal appears hereon.

U.S. Department of State

Office of Overseas Buildings Operations

# GENERATOR EXHAUST PENETRATION 60 MINUTE PP-33-07

OBO/SEB Security Details

| | |
|---|---|
| DWG.TITLE: PP-33-07.dwg | |
| REV: | DATE: |
| REV: | DATE: |
| SCALE: N.T.S. | SHEET: 1 OF 2 |
| DRAWN BY: | |
| DATE: January 2012 | UNCLASSIFIED |

6mm THICK STEEL SECURITY PLATE; MINIMUM 600mm x 600mm x 6mm, OR SIZE TO PROVIDE 150mm MINIMUM FROM EDGE OF OPENING TO PLATE EDGE – WHICHEVER IS GREATER

SPLIT PLATE FOR INSTALLATION AROUND PIPE PENETRATION

MINIMUM (10) ANCHOR BOLT HOLES, OR 125mm ON CENTER, WHICHEVER IS GREATER

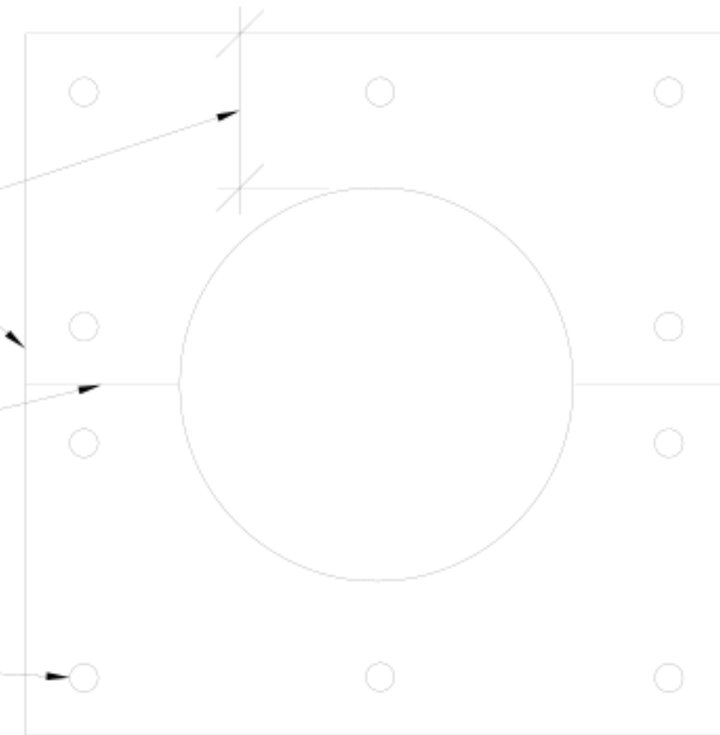

SECURITY WALL PLATE DESIGN

THIMBLE COVER PLATE; FABRICATE USING 12mm STEEL PLATE; SIZE TO COVER THIMBLE AND ALLOW FOR CONTINUOUS WELD TO WALL PIPE SLEEVE

TACK WELD THE INTERIOR THIMBLE PLATE COVER TO THE PIPE, SECURE SIDE ONLY (MIN. 4–6.25mm WELDS, 45ø APART)

PROVIDE A MAXIMUM GAP OF 3mm BETWEEN THIMBLE COVER PLATE AND GENERATOR EXHAUST PIPE PASSING THRU

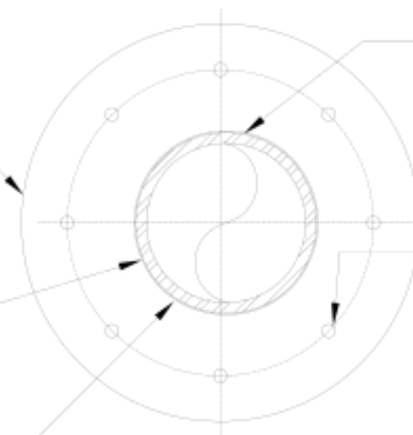

GENERATOR EXHAUST PIPE

(8) 25mmø VENTILATION HOLES ON EXTERIOR THIMBLE SECURITY COVER PLATE; CONFIRM SIZE/ COUNT WITH THIMBLE MANUFACTURER

INTERIOR THIMBLE COVER PLATE DESIGN

GENERATOR EXHAUST PIPE

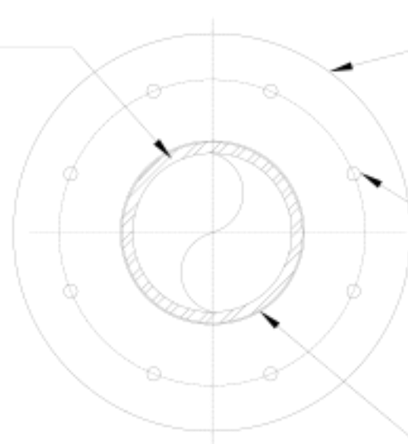

THIMBLE COVER PLATE; FABRICATE USING 6mm STEEL PLATE; SIZE TO COVER THIMBLE AND ALLOW FOR CONTINUOUS WELD TO WALL PIPE SLEEVE

(8) 25mmø VENTILATION HOLES ON EXTERIOR THIMBLE SECURITY COVER PLATE; OFFSET HOLES FROM OPPOSING THIMBLE SECURITY COVER.

PROVIDE A MAXIMUM GAP OF 3mm BETWEEN THIMBLE COVER PLATE AND GENERATOR EXHAUST PIPE PASSING THRU

EXTERIOR THIMBLE COVER PLATE DESIGN

NOTE: USE FOR GENERATOR EXHAUST PIPE WITH AN OPEN AREA LESS THAN 619cm$^2$.

2 TYPICAL DETAIL
SCALE: N.T.S.

WARNING:
This document is the property of the U.S. Government. Further reproduction and/or distribution is prohibited without the express written permission of: Overseas Buildings Operations, U.S. Department of State, Washington, DC, 20522-0620. Information on this document is not to be altered except with the written approval of the individual whose seal appears hereon.

U.S. Department of State
Office of Overseas Buildings Operations

GENERATOR EXHAUST PENETRATION
60 MINUTE PP-33-07

OBO/SEB Security Details

| | |
|---|---|
| DWG.TITLE: PP-33-07.dwg | |
| REV: | DATE: |
| REV: | DATE: |
| SCALE: N.T.S. | SHEET: 2 OF 2 |
| DRAWN BY: | |
| DATE: January 2012 | UNCLASSIFIED |

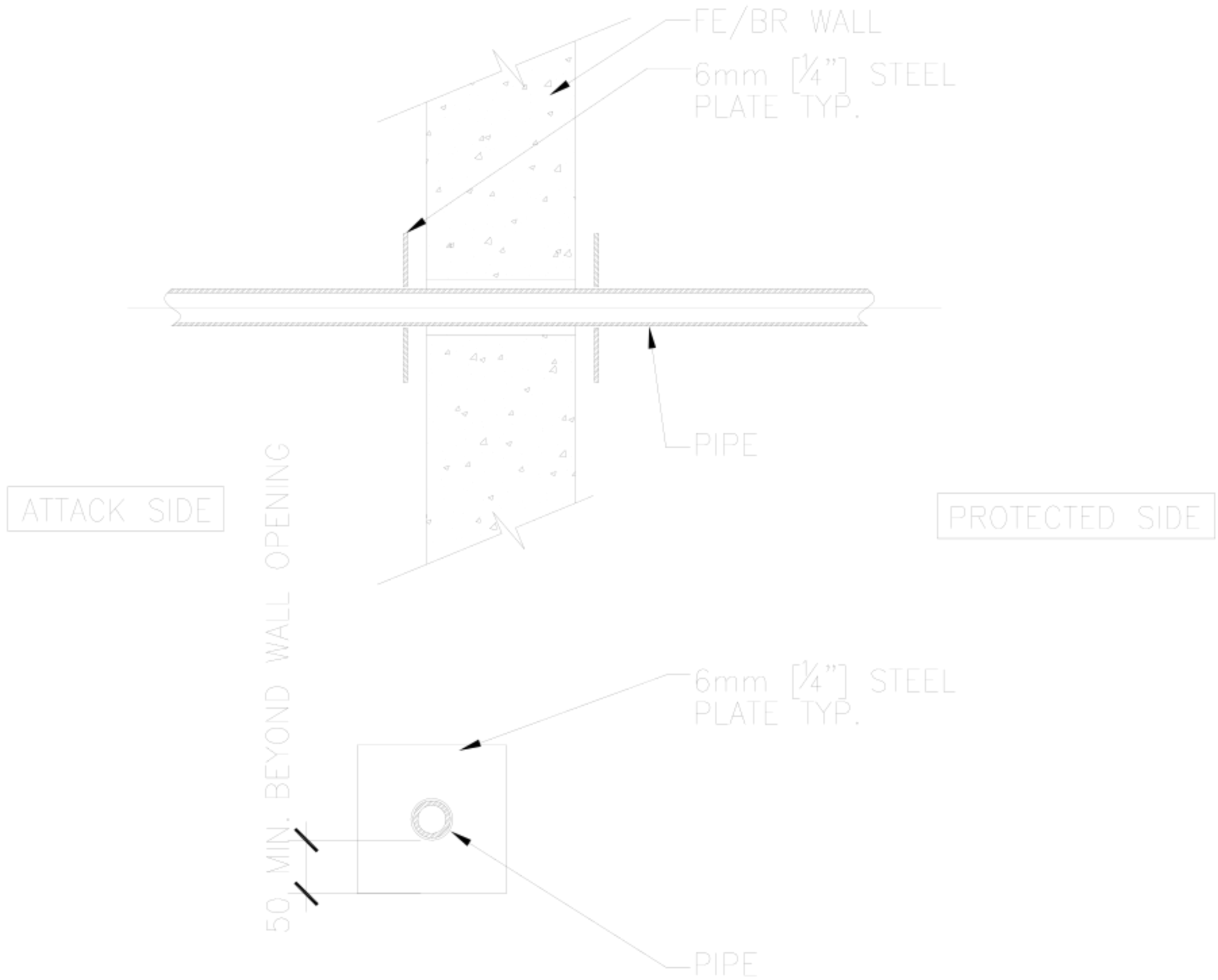


NOTES:

1) THIS DETAIL IS USED FOR BALLISTIC PROTECTION OF PIPES IN 15 MINUTE HARDLINE WALLS.
2) PENETRATION MUST BE LESS THAN 620 SQ CM.
3) DETAIL CAN BE USED FOR "CORE" SPACES FOR BR, BUT OTHER COUNTERMEASURES MAY BE REQUIRED.
4) PENETRATIONS WITH GAPS BETWEEN PIPE AND WALL CONSTRUCTION THAT DO NOT EXCEED 6MM DO NOT REQUIRE PROTECTION.

1 EXHAUST PIPE PENETRATION

SCALE: N.T.S.

WARNING:
This document is the property of the U.S. Government. Further reproduction and/or distribution is prohibited without the express written permission of: Overseas Buildings Operations, U.S. Department of State, Washington, DC, 20522-0620. Information on this document is not to be altered except with the written approval of the individual whose seal appears hereon.

U.S. Department of State

Office of Overseas Buildings Operations

EXHAUST PIPE PENETRATION
60 MINUTE - PP-33-08

OBO/SEB Security Details

| | |
|---|---|
| DWG.TITLE: PP-33-08.dwg | |
| REV: | DATE: |
| REV: | DATE: |
| SCALE: N.T.S. | SHEET: 1 OF 1 |
| DRAWN BY: | |
| DATE: January 2012 | UNCLASSIFIED |

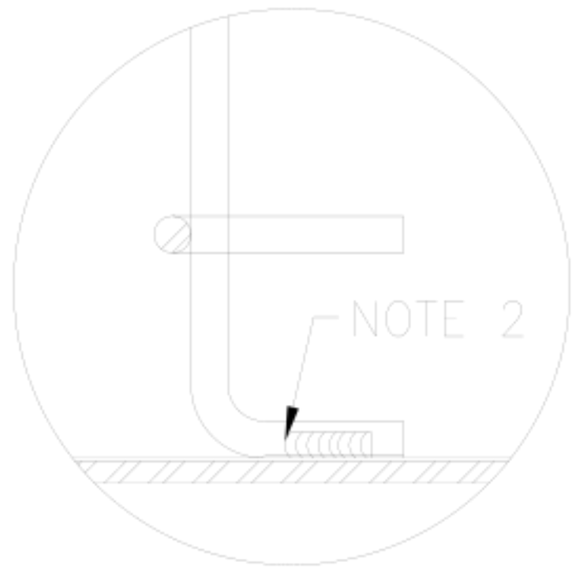


DETAIL A

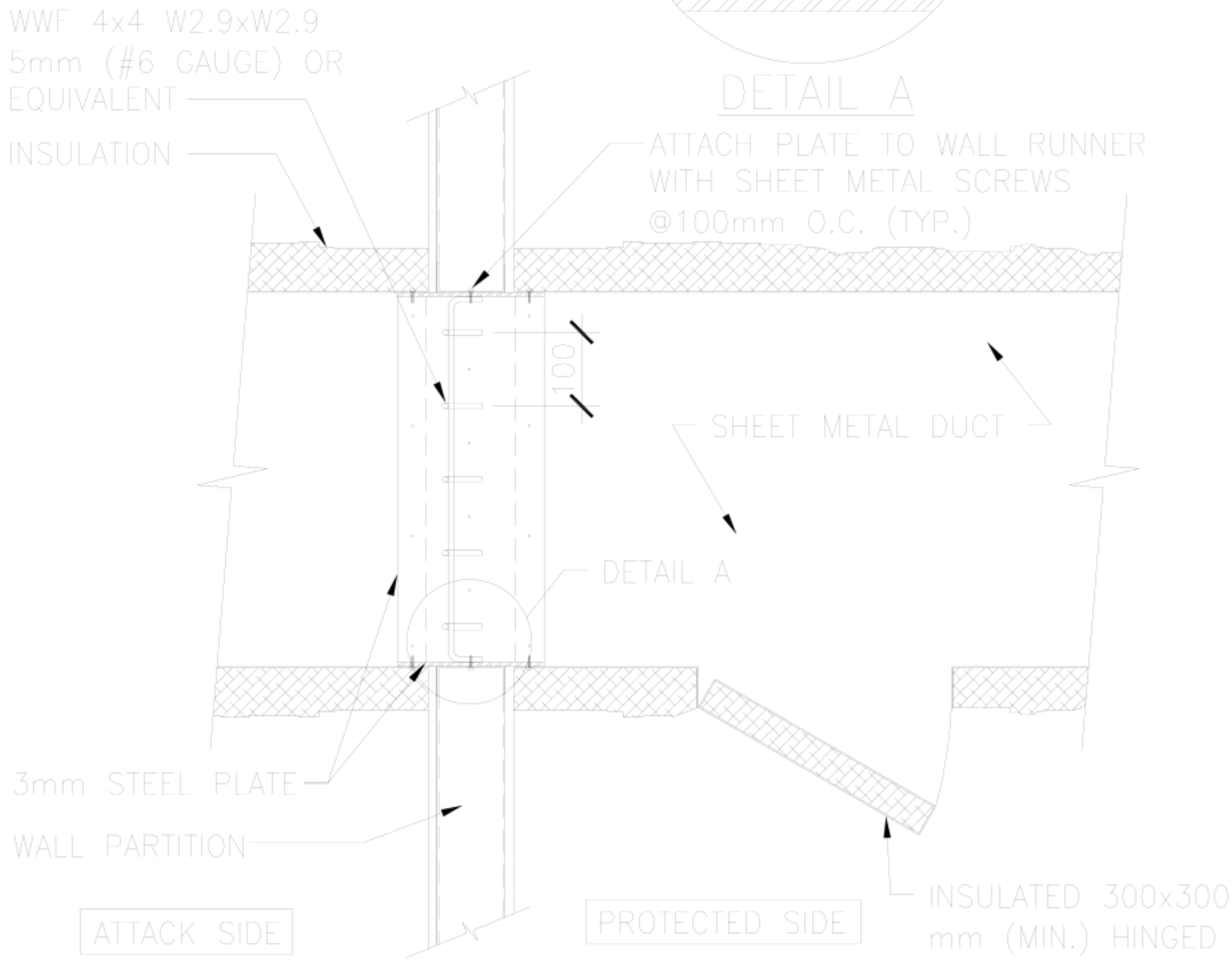


NOTES:

1. ALL DIMENSIONS IN ARE IN MILLIMETERS.
2. BEND AT EDGES AND TACK WELD TO STEEL FRAME
3. MAINTAIN NET FREE AREA OF DUCT.
4. DETAIL IS FOR PHYSICAL PROTECTION. OTHER COUNTERMEASURES MAY BE REQUIRED

1

# CAA TAMPERPROOF DUCT GRILL

SCALE: N.T.S.

WARNING:
This document is the property of the U.S. Government. Further reproduction and/or distribution is prohibited without the express written permission of: Overseas Buildings Operations, U.S. Department of State, Washington, DC, 20522-0620. Information on this document is not to be altered except with the written approval of the individual whose seal appears hereon.

U.S. Department of State

Office of Overseas Buildings Operations

CAA DUCT PENETRATION
DP-00-01

OBO/SEB Security Details

| | |
|---|---|
| DWG.TITLE: DP-00-01.dwg | |
| REV: | DATE: |
| REV: | DATE: |
| SCALE: N.T.S. | SHEET: 1 OF 1 |
| DRAWN BY: | |
| DATE: January 2012 | UNCLASSIFIED |

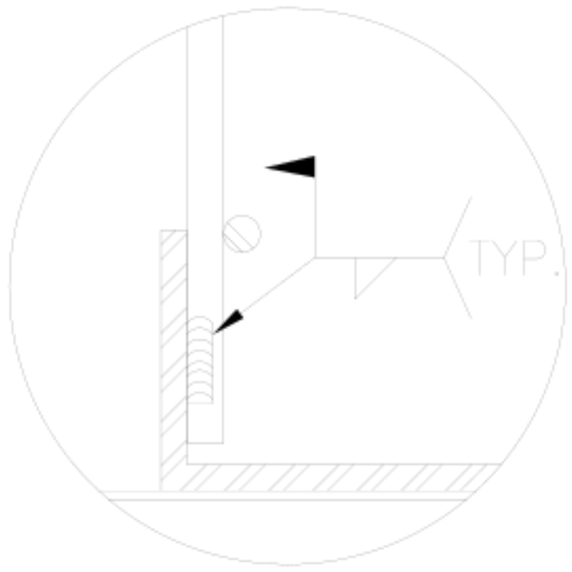


DETAIL A

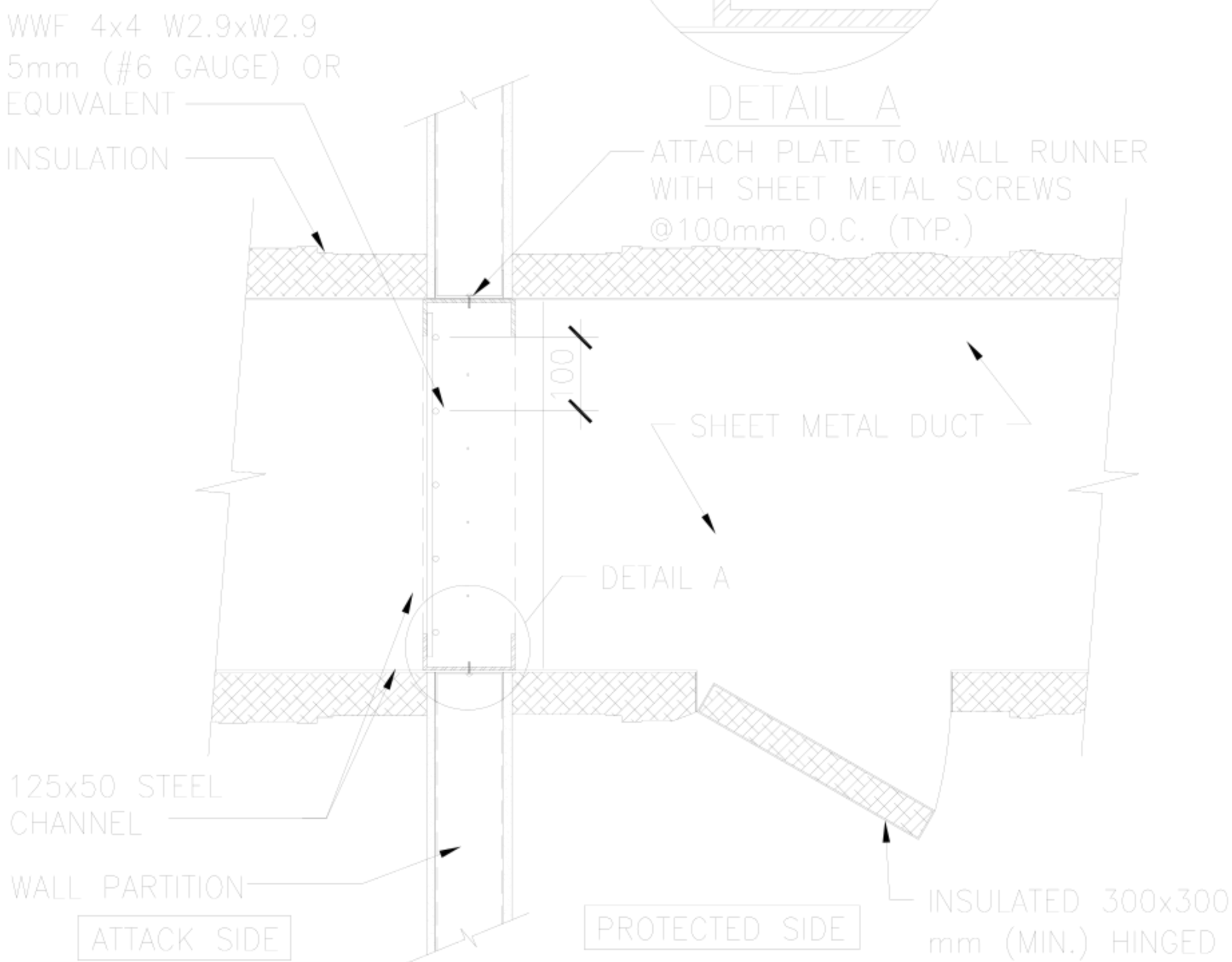


NOTES:

1. ALL DIMENSIONS ARE IN MILLIMETERS.
2. TACK WELD TO STEEL FRAME
3. MAINTAIN NET FREE AREA OF DUCT.
4. DETAIL IS FOR PHYSICAL PROTECTION. OTHER COUNTERMEASURES MAY BE REQUIRED

1

# CAA TAMPERPROOF DUCT GRILL

SCALE: N.T.S.

WARNING:
This document is the property of the U.S. Government. Further reproduction and/or distribution is prohibited without the express written permission of: Overseas Buildings Operations, U.S. Department of State, Washington, DC, 20522-0620. Information on this document is not to be altered except with the written approval of the individual whose seal appears hereon.

U.S. Department of State

Office of Overseas Buildings Operations

CAA DUCT PENETRATION
DP-00-02

OBO/SEB Security Details

| | |
|---|---|
| DWG.TITLE: DP-00-02.dwg | |
| REV: | DATE: |
| REV: | DATE: |
| SCALE: N.T.S. | SHEET: 1 OF 1 |
| DRAWN BY: | |
| DATE: January 2012 | UNCLASSIFIED |

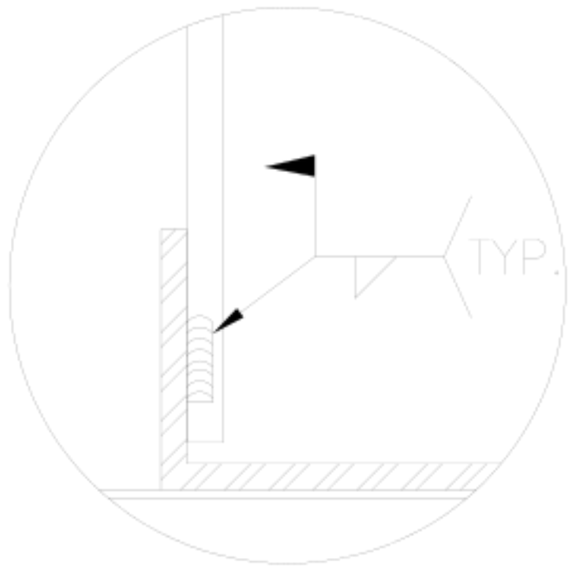


DETAIL A

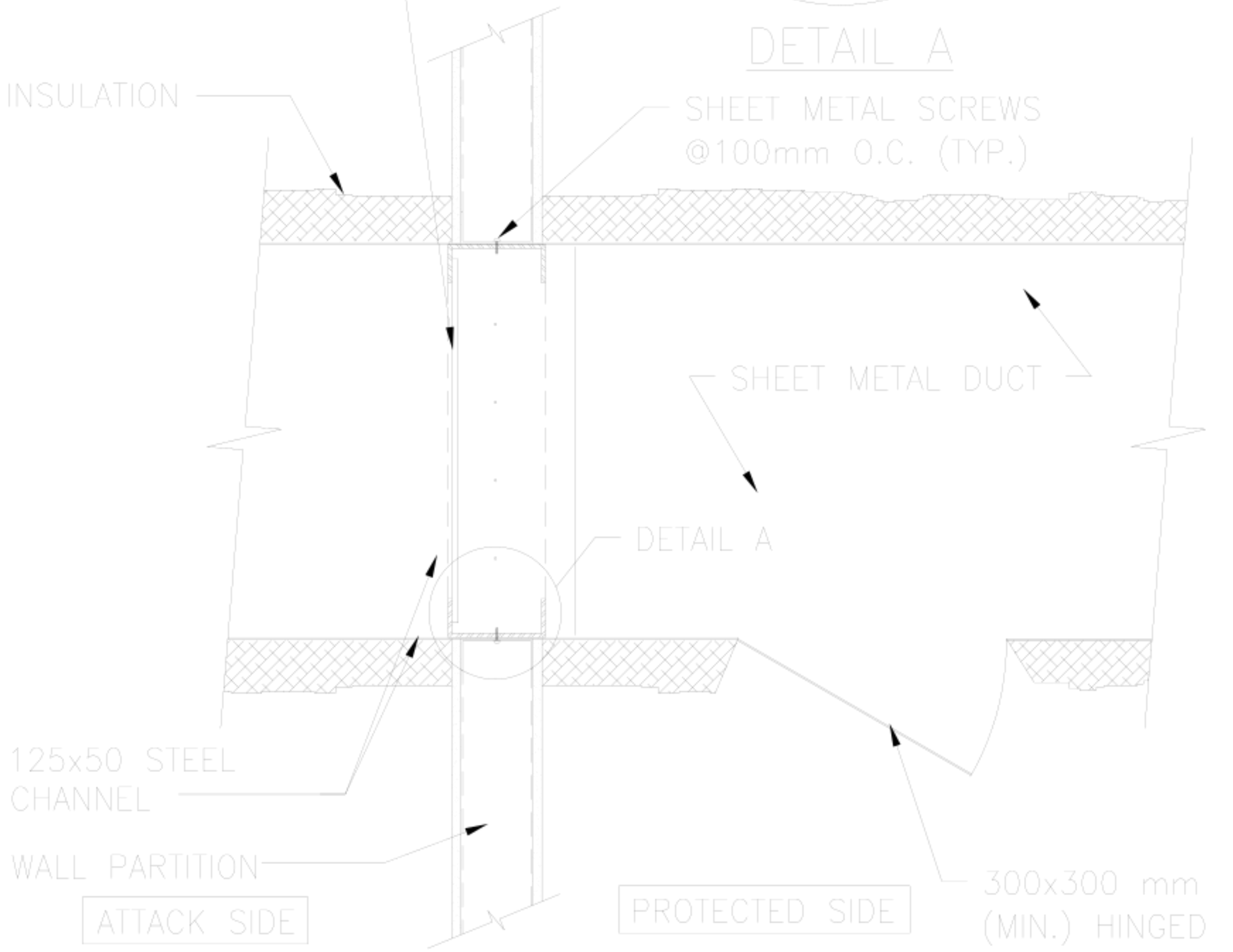


NOTES:

1. ALL DIMENSIONS IN mm.
2. TACK WELD TO STEEL FRAME
3. MAINTAIN NET FREE AREA OF DUCT.
4. DETAIL IS FOR PHYSICAL PROTECTION. OTHER COUNTERMEASURES MAY BE REQUIRED

1 CAA TAMPERPROOF PENETRATION

SCALE: N.T.S.

WARNING:
This document is the property of the U.S. Government. Further reproduction and/or distribution is prohibited without the express written permission of: Overseas Buildings Operations, U.S. Department of State, Washington, DC, 20522-0620. Information on this document is not to be altered except with the written approval of the individual whose seal appears hereon.

U.S. Department of State

Office of Overseas Buildings Operations

CAA DUCT PENETRATION
DP-00-03

OBO/SEB Security Details

| | |
|---|---|
| DWG.TITLE: DP-00-03.dwg | |
| REV: | DATE: |
| REV: | DATE: |
| SCALE: N.T.S. | SHEET: 1 OF 1 |
| DRAWN BY: | |
| DATE: January 2011 | UNCLASSIFIED |

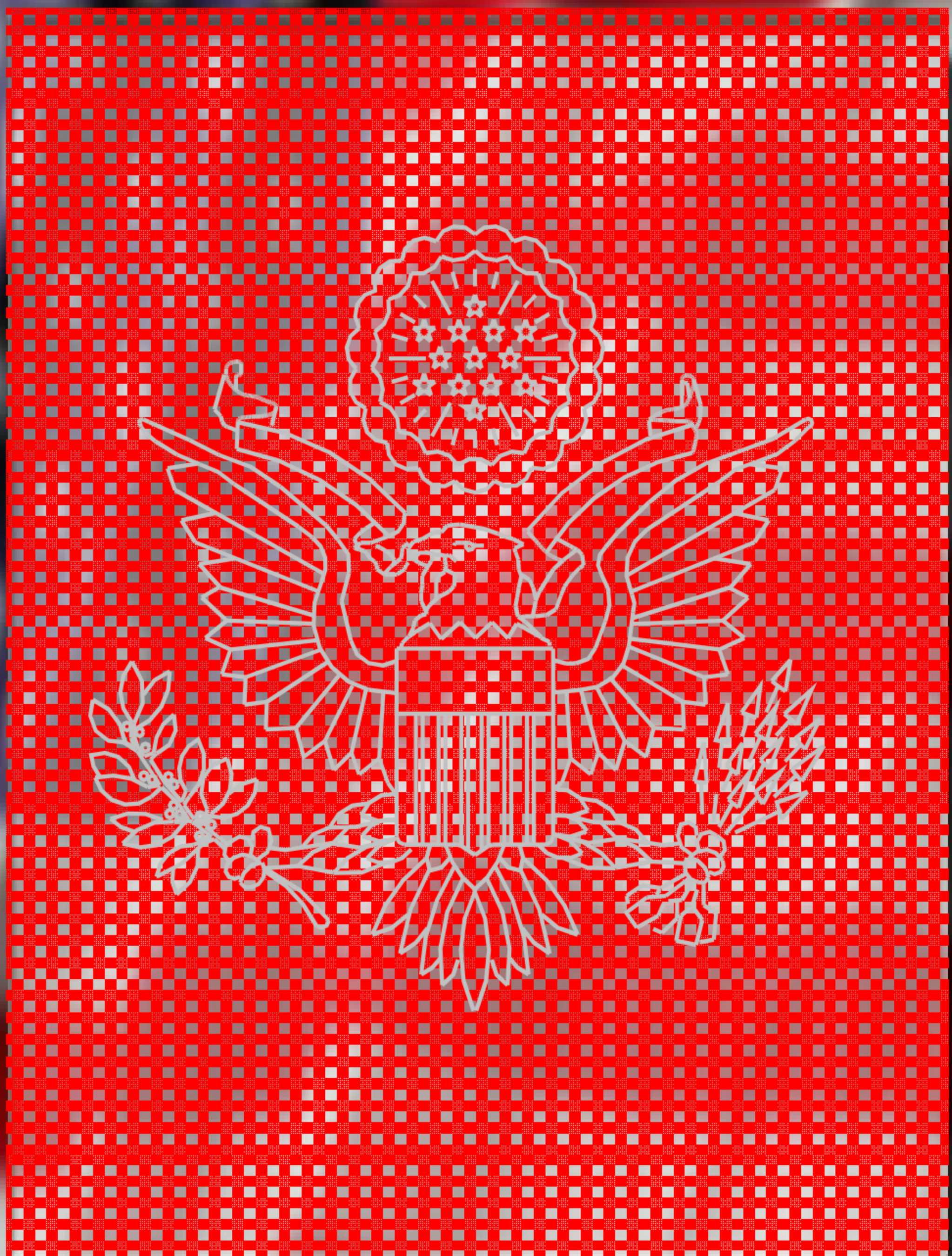

Unclassified

# Certified Wall Assemblies

Unclassified

# Certified Wall Assemblies

**BPK-LIM-DOS-01 – Limited Protection Barrier**

**SS-11-01 – Special Suite Requirements**

**Secure Room – Secure Room Wall Detail**

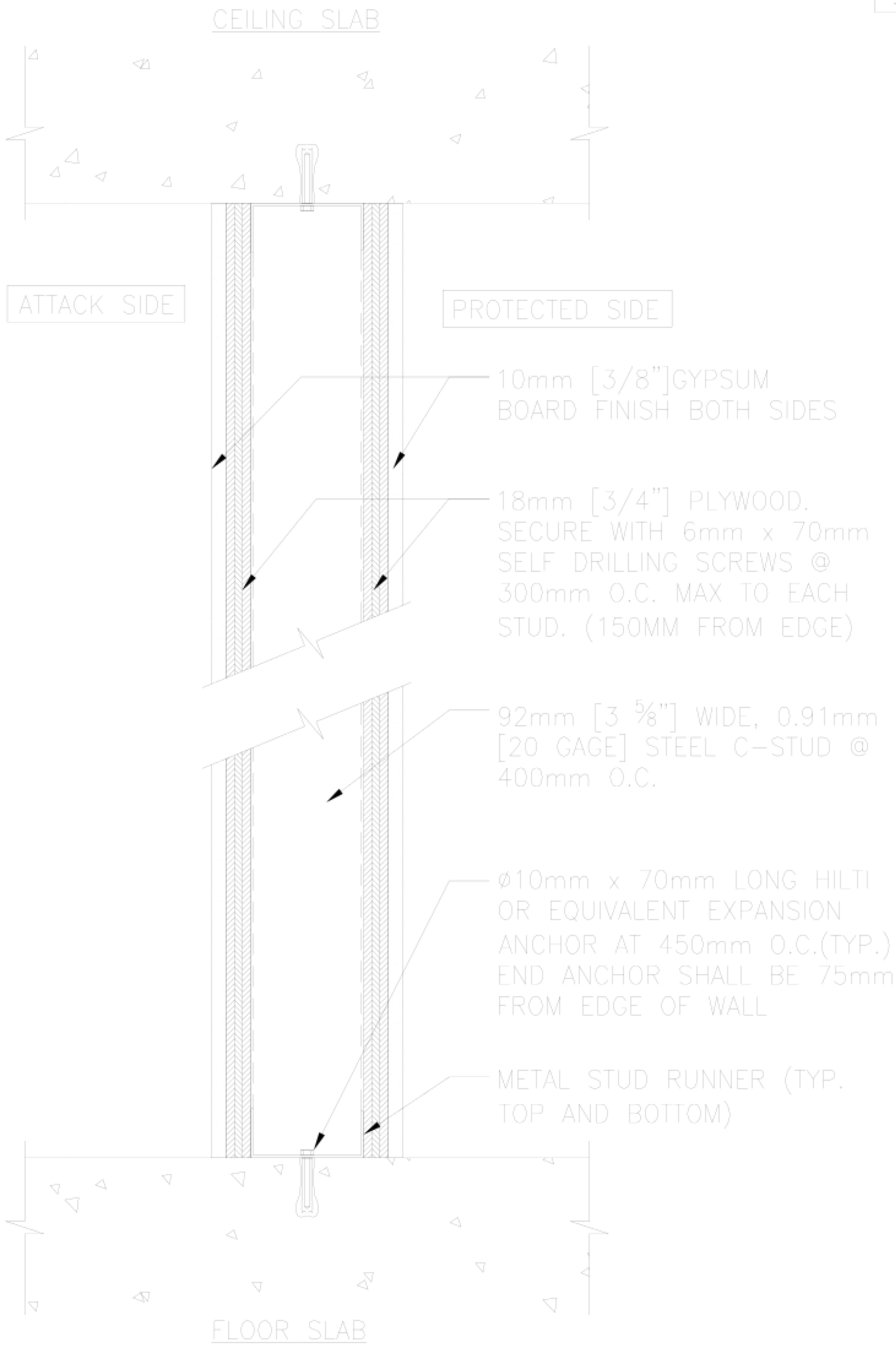


1

# NON-MAN-PASSABLE BARRIER

SCALE: N.T.S.

WARNING:
This document is the property of the U.S. Government. Further reproduction and/or distribution is prohibited without the express written permission of: Overseas Buildings Operations, U.S. Department of State, Washington, DC, 20522-0620. Information on this document is not to be altered except with the written approval of the individual whose seal appears hereon.

U.S. Department of State

Office of Overseas Buildings Operations

NON-MAN-PASSABLE BARRIER
BPK-LIM-DOS-01

OBO/SEB Security Details

| | |
|---|---|
| DWG.TITLE: BPK-LIM-DOS-01.dwg | |
| REV: | DATE: |
| REV: | DATE: |
| SCALE: N.T.S. | SHEET: 1 OF 2 |
| DRAWN BY: | |
| DATE: January 2009 | UNCLASSIFIED |

MATERIAL SPECIFICATIONS

STRUCTURAL GRADE PLYWOOD:
ABX, E=10 MPa (1500 PSI),
Fb=8273 kPA (1200 PSI), Fv=965
kPa (140 PSI)

MATERIAL NOTES:

1. ANCHORAGE SHOWN IS FOR CONCRETE ONLY. FOR OTHER SUBSTRATES, REFER TO OBO/PE/DS/SEB FOR GUIDANCE
2. ARCHITECTURAL FINISH TO BE SPECIFIED BY A/E OR OTHERS
3. ALL NUMBERS AND DIMENSIONS ARE IN MILLIMETERS UNLESS NOTED OTHERWISE

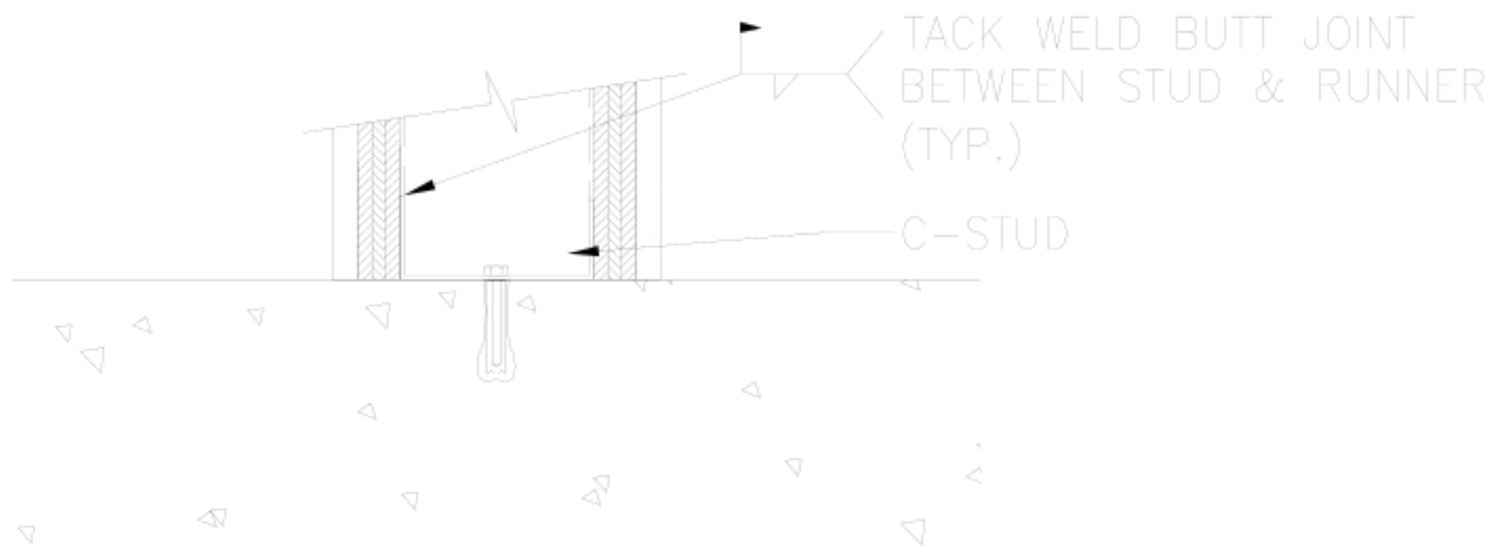


2 NON-MAN-PASSABLE BARRIER

SCALE: N.T.S.

WARNING:
This document is the property of the U.S. Government. Further reproduction and/or distribution is prohibited without the express written permission of: Overseas Buildings Operations, U.S. Department of State, Washington, DC, 20522-0620. Information on this document is not to be altered except with the written approval of the individual whose seal appears hereon.

U.S. Department of State

Office of Overseas Buildings Operations

NON-MAN-PASSABLE BARRIER
BPK-LIM-DOS-01

OBO/SEB Security Details

| | |
|---|---|
| DWG.TITLE: BPK-LIM-DOS-01.dwg | |
| REV: | DATE: |
| REV: | DATE: |
| SCALE: N.T.S. | SHEET: 2 OF 2 |
| DRAWN BY: | |
| DATE: January 2009 | UNCLASSIFIED |

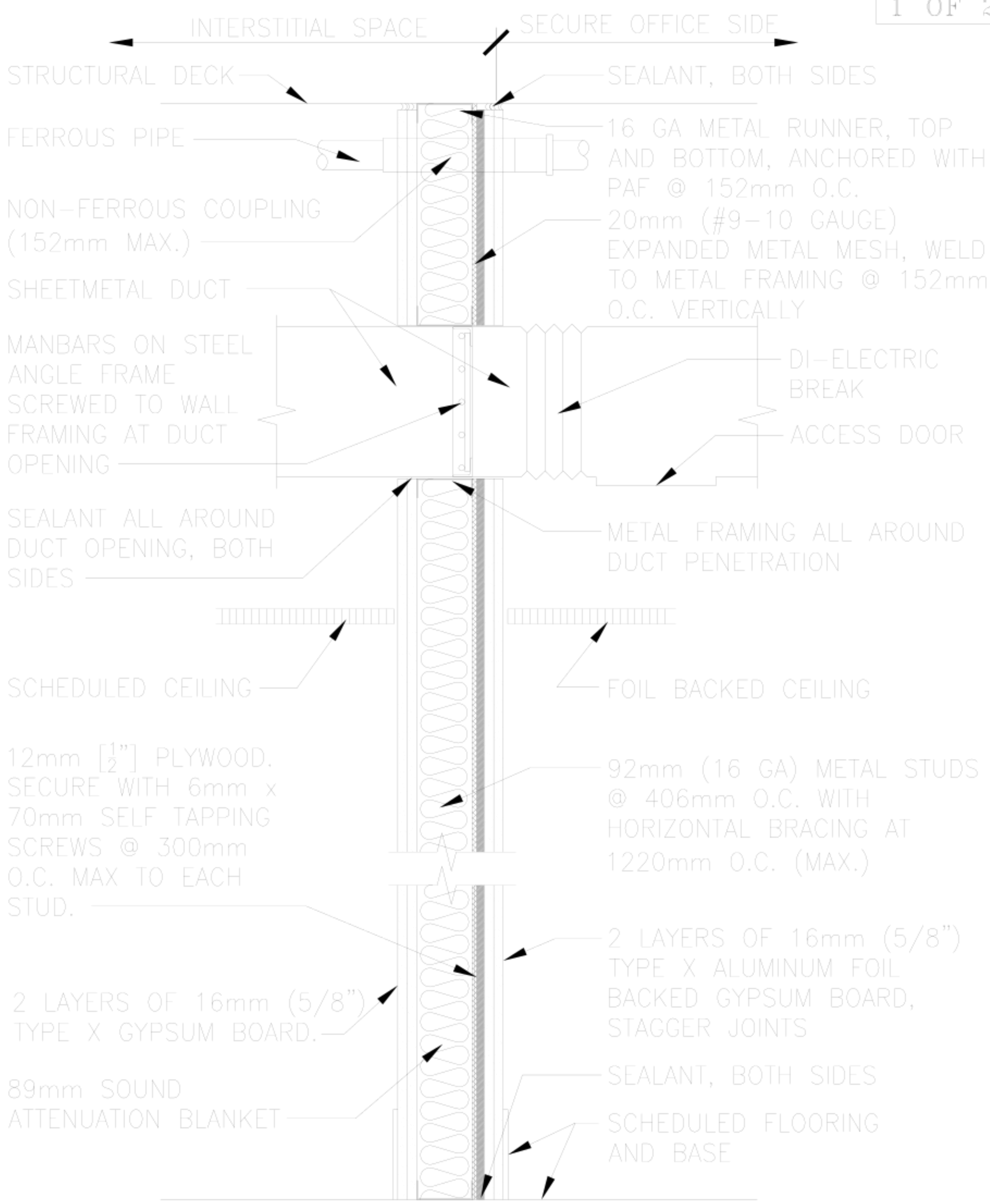


## TYPICAL PARTITION

USE AT SUITE PERIMETER FOR SUITES IDENTIFIED ELSEWHERE AND EQUIPMENT ROOMS.

WARNING:
This document is the property of the U.S. Government. Further reproduction and/or distribution is prohibited without the express written permission of: Overseas Buildings Operations, U.S. Department of State, Washington, DC, 20522-0620. Information on this document is not to be altered except with the written approval of the individual whose seal appears hereon.

U.S. Department of State

Office of Overseas Buildings Operations

SPECIAL SUITE REQUIREMENTS
SS-11-01

OBO/SEB Security Details

| | |
|---|---|
| DWG.TITLE: SS-11-01.dwg | |
| REV: | DATE: |
| REV: | DATE: |
| SCALE: 1:10 | SHEET: 1 OF 2 |
| DRAWN BY: | |
| DATE: January 2012 | UNCLASSIFIED |

PARTITION NOTES:

1. CONDUIT/PIPE PENETRATIONS THROUGH THE PARTITION SHALL BE SEALED ALL AROUND, AND SHALL BE FITTED WITH A DIELECTRIC BREAK WITHIN 6" (152mm) OF WALL AT THE SECURE SIDE OF THE ROOM.
2. DUCT PENETRATIONS THROUGH THE PARTITION SHALL BE SEALED ALL AROUND AND SHALL BE FITTED WITH A DIELECTRIC BREAK WITHIN 6" (152mm) AT THE SECURE SIDE OF THE ROOM. A 12"x12" (305x305) ACCESS PANEL SHALL BE PROVIDED IN THE BOTTOM OF THE DUCT. DUCT OPENINGS LARGER THAN 95 SI (61,935)(UNLESS ONE DIMENSION IS 6" (152) OR LESS) SHALL BE PROTECTED WITH 1/2" (13) MANBARS SPACED AND WELDED AT 6" (152) O.C. EACH WAY (UNLESS ONE DIMENSION OF THE DUCT IS 6" (152) OR LESS).
3. PARTITION SHALL BE SEALED CONTINUOUSLY WITH AN ACOUSTICAL SEALANT WHENEVER IT ABUTS ANOTHER ELEMENT(I.E. WALL, COLUMN, MULLION, ETC.)
4. EXPANDED CARBON STEEL SECURITY MESH TO BE ASTM A569/A569M, ASTM F1267, TYPE II, CLASS 1, STANDARD, FLATTENED, STYLE 20mm (#9-10 GAUGE), 171 LBS/CSF. SWD=.923" (23), LWD=2.1" (53) WITH OVERALL THICKNESS OF 0.120 WITH MAX. OPEN AREA OF 63%. METAL MESH TO BE WELDED TO FRAMING AT 6" (150) O.C. AT EACH STUD.

MODULAR CARPET TILE:

CARPET SHALL BE ADHESIVELY BONDED WITH THE FOLLOWING REQUIREMENTS: YARN SHALL BE SOLUTION-DYES 100 PERCENT SOIL AND STAIN-HIDING NYLON WITH CONTINUOUS CONDUCTIVE MONOFILAMENT IN EVERY TUFT. CARPET CONSTRUCTION SHALL BE HIGH-DENSITY, TEXTURED LOOP ATTACHED TO A DISSIPATIVE UNITARY POLYURETHANE BACKING. USE CARPET TILE MANUFACTURED WITH A HIGH CONTENT OF RECYCLED MATERIALS. THE ADHESIVE SHALL BE LOW VOC RATED RELEASABLE TYPE.

COMPOSITION VINYL TILE:

VINYL COMPOSITION FLOOR TILE COMPLYING WITH ASTM F1066 AND WITH REQUIREMENTS SPECIFIED. TILE SHALL BE CLASS 2 THROUGH-PATTERN TILE WITH A SMOOTH WEARING SURFACE AND TILE THICKNESS OF 1/8". TILE DIMENSIONS SHALL BE 12x12 INCHES (305x305). ADHERE TILES TO FLOORING SUBSTRATE USING A FULL SPREAD OF ADHESIVE APPLIED TO SUBSTRATE TO COMPLY WITH TILE MANUFACTURER'S WRITTEN INSTRUCTIONS. THE ADHESIVE SHALL BE LOW VOC RATED RELEASABLE TYPE.

RUBBER OR VINYL WALL BASE:

RUBBER OF VINYL WALL BASE COMPLYING WITH FS SS-W-40, TYPE 1 STANDARD WITH REQUIREMENTS SPECIFIED. USE A COVED BASE WITH TOP-SET TOE WITH MINIMUM THICKNESS OF .120 INCH AND HEIGHT OF 4 INCHES (100). USE PREMOLDED OUTSIDE CORNERS. THE ADHESIVE SHALL BE LOW VOC RATED RELEASABLE TYPE.

ACRYLIC ENAMEL PAINT:

ACRYLIC ENAMEL PAINT SHALL BE WATER BASED, WITH LOW VOC (VOLATILE ORGANIC COMPOUNDS) THAT MEET OR EXCEED THE VOC AND CHEMICAL COMPONENT LIMITS OF THE GREEN SEAL GS-11 REQUIREMENTS. USE AND EGGSHELL LUSTER IN TWO COATS OVER A PRIMER.

FOIL BACKED ACOUSTICAL PANEL CEILING SYSTEM:

ACOUSTIC PANELS SHALL BE A WATER-FELTED, MINERAL-BASED PANELS WITH ALUMINUM FOIL BACK. THE PANEL SHALL MEET ASTM E1264 FOR TYPE III, MINERAL BASE WITH PAINTED FINISH: FORM 2, WATER FELTED. THE PANEL PATTERN SHALL COMPLY TO ASTM E1264 PATTERN DESIGNATION E (LIGHTLY TEXTURED) AND I (EMBOSSED) WITH A WHITE FACTORY APPLIED LATEX PAINT FINISH. THE PANELS SHALL CONTAIN 72-76% RECYCLED CONTENT. THE LIGHT OF REFLECTANCE COEFFICIENT NOT LESS THAN LR 0.80. THE NOISE REDUCTION COEFFICIENT OF NOT LESS THAN NRC 0.50.

THE CEILING SUSPENSION SYSTEM SHALL BE A NARROW-FACE, UNCAPPED, DOUBLE-WEB, STEEL SUSPENSION SYSTEM. MAIN AND CROSS RUNNERS ROLL FORMED FROM PREPAINTED, COLD-ROLLED STEEL SHEET TO PRODUCE STRUCTURAL MEMBERS WITH 9/16 INCH (14) WIDE FACES. THE FACES DESIGN SHALL HAVE A 1/4" (6) WIDE REVEAL. THE FACE FINISH SHALL BE PAINTED WHITE AND THE REVEAL FINISH SHALL BE PAINTED TO MATCH FLANGE COLOR.

WARNING:
This document is the property of the U.S. Government. Further reproduction and/or distribution is prohibited without the express written permission of: Overseas Buildings Operations, U.S. Department of State, Washington, DC, 20522-0620. Information on this document is not to be altered except with the written approval of the individual whose seal appears hereon.

U.S. Department of State

Office of Overseas Buildings Operations

SPECIAL SUITE REQUIREMENTS
SS-11-01

OBO/SEB Security Details

| | |
|---|---|
| DWG.TITLE: SS-11-01.dwg | |
| REV: | DATE: |
| REV: | DATE: |
| SCALE: 1:10 | SHEET: 2 OF 2 |
| DRAWN BY: | |
| DATE: January 2011 | UNCLASSIFIED |

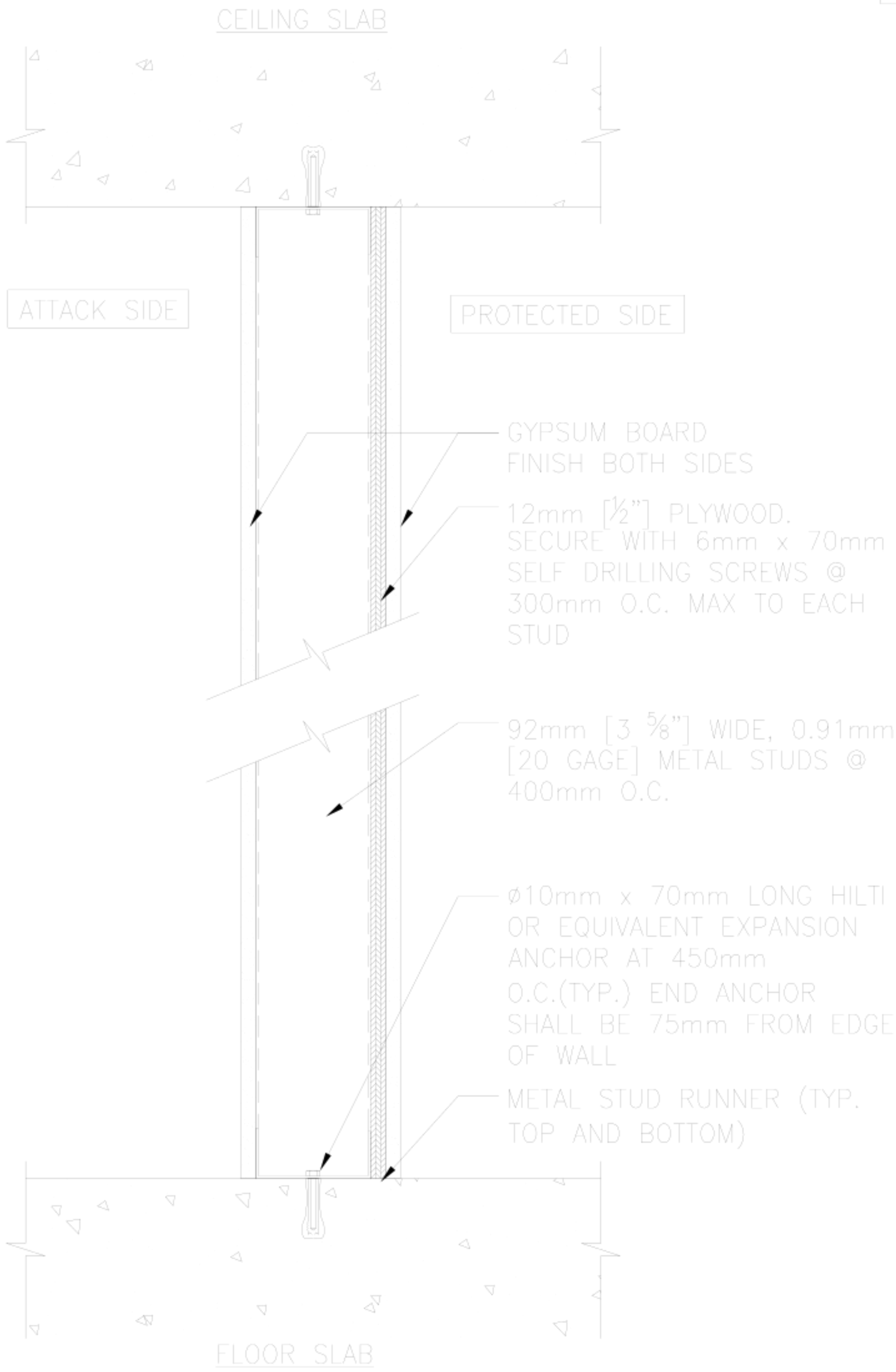


1

# SECURE ROOM WALL

SCALE: N.T.S.

WARNING:
This document is the property of the U.S. Government. Further reproduction and/or distribution is prohibited without the express written permission of: Overseas Buildings Operations, U.S. Department of State, Washington, DC, 20522-0620. Information on this document is not to be altered except with the written approval of the individual whose seal appears hereon.

U.S. Department of State

Office of Overseas Buildings Operations

SECURE ROOM WALL DETAIL

OBO/SEB Security Details

| | |
|---|---|
| DWG.TITLE: SECURE ROOM.dwg | |
| REV: | DATE: |
| REV: | DATE: |
| SCALE: N.T.S. | SHEET: 1 OF 1 |
| DRAWN BY: | |
| DATE: January 2009 | UNCLASSIFIED |

Warning: Possession of this book by persons other than the individual listed below is strictly forbidden under Federal Law. This book and its safeguarding is the responsibility of:

_____

# Physical Security Detail Handbook

## January 2012

**Unclassified**