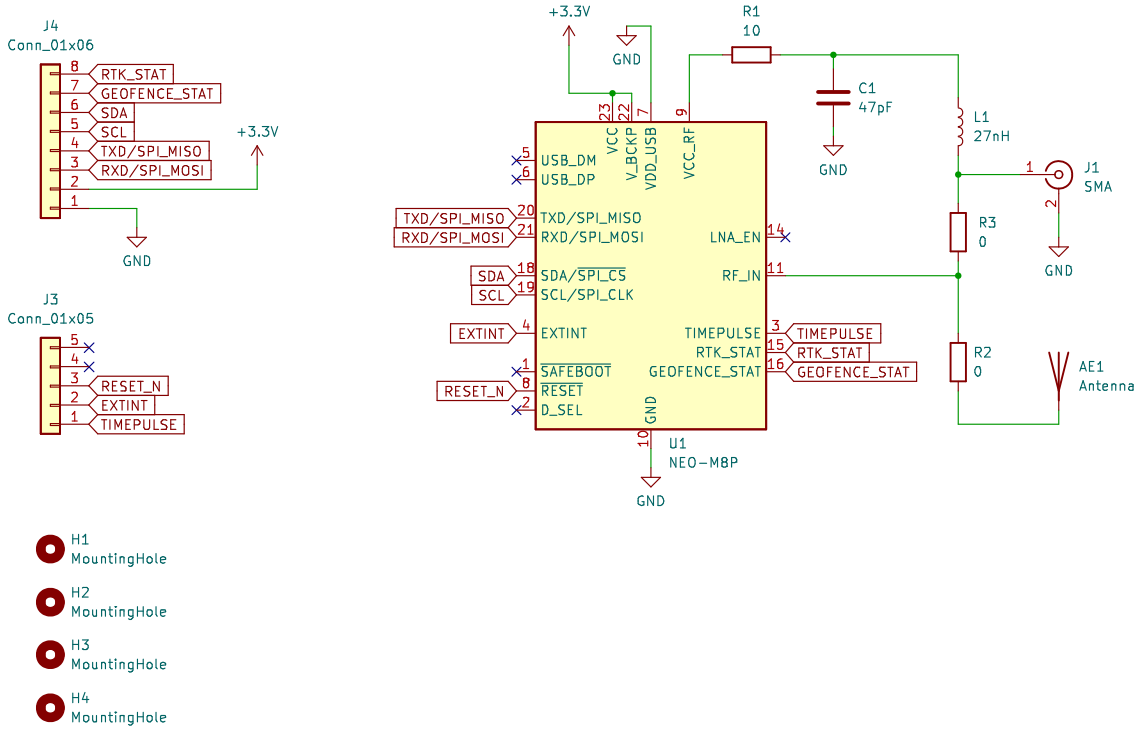
J4
Conn_01x06
RTK_STAT
GEOFENCE_STAT
SDA
SCL
TXD/SPI_MISO
RXD/SPI_MOSI
+3.3V
GND
J3
Conn_01x05
RESET_N
EXTINT
TIMEPULSE
H1
MountingHole
H2
MountingHole
H3
MountingHole
H4
MountingHole
+3.3V
GND
R1
10
C1
47pF
GND
L1
27nH
J1
SMA
R3
0
GND
R2
0
AE1
Antenna
VCC
V_BCKP
VDD_USB
VCC_RF
USB_DM
USB_DP
TXD/SPI_MISO
RXD/SPI_MOSI
SDA/SPI_CS
SCL/SPI_CLK
EXTINT
SAFEBOOT
RESET
D_SEL
LNA_EN
RF_IN
TIMEPULSE
RTK_STAT
GEOFENCE_STAT
GND
U1
NEO-M8P
GND